April 1, 2016

Audrey Brown
City of Westlake Village

RE: Westlake Village Community Park Phase II Revised Scope of Supply & Design Submittal

Audrey,

The Scope of Supply & Design Submittal (SSDS) has been revised per all comments to date and the plans have been sealed for the Westlake Village Community Park Phase II Project building.

1. Please submit the sealed drawings and calculations for final permit review with the building department. Romtec will respond and revise per any final comments the building department has. With their early input on the first plan set we are hoping for minimal comments on the sealed plans.

2. Once the SSDS is approved, you will sign and return the Submittal Approval Form & Notice to Proceed Form contained in the SSDS. This will then put your building into production.

3. Romtec will then provide you with an anticipated delivery date for the building package to arrive on-site.

   Note: Romtec's production lead times are roughly 6-8 weeks from receipt of signed approval to delivery of the building packages.

4. Romtec will then provide you with the "Final for Construction" SSDS including the sealed plans and calculations revised per all building department comments.

5. Romtec will then deliver the building package.

Please let me know if you have any questions. Thank you for all your help on the project thus far.

Respectfully,
Romtec, Inc.

Romtec, Inc. ~ 18240 North Bank Road ~ Roseburg ~ Oregon ~ 97470
Office 541-496-3541 / Fax 541-496-0803
Romtec41@romtecutilities.com

Nannette Sibley
Sales Operations

Cc: Dave Smith, Project Manager, Romtec Inc.
Dalton Deeks, Engineering Manager, Romtec Inc.

Romtec, Inc. ~ 18240 North Bank Road ~ Roseburg ~ Oregon ~ 97470
Office 541-496-3541 / Fax 541-496-0803
Romtec41@romtecutilities.com

ROMTEC SCOPE OF SUPPLY AND DESIGN SUBMITTAL

FOR:

WESTLAKE VILLAGE COMMUNITY PARK PHASE II

PLAN SET #18650 (WESTLAKE VILLAGE, CA)

DATE: March 29, 2016

REVISION: 5

SUBMITTED TO:

Audrey Brown
City of Westlake Village
31200 Oak Crest Drive
Westlake Village, CA 91361
(818) 706-1613
Audrey@wlv.org

Romtec, Inc.
18240 North Bank Road, Roseburg, OR 97470
541-496-3541 • 541-495-0803 (fax)
romtec1@romtec.com • www.romtec.com

March 29, 2016

To: Audrey Brown
City of Westlake Village

From: Romtec Operations
Re: Documentation for the proposed project identified as:

Project Name: Westlake Village Community Park Phase II
Plan Set: 18650
Revision: 5

Romtec is pleased to offer this Scope of Supply and Design Submittal for the project listed above. All parties with an interest in this project must carefully read and comprehend the information contained herein.

1. Introduction
Information about this document and how to use it.

2. Romtec Products & Services
Lists products and services supplied by Romtec.

3. Products & Services Not Supplied by Romtec
Lists products and services not supplied by Romtec.

4. Warranty & Limitations
Includes the Romtec, Inc. limited warranty, limitations of Romtec's responsibilities, and copyright.

5. Project Design
The current plan set, calculations (if plans are sealed) and product data sheets for the Romtec supplied building components.

Please address questions, comments and requests for changes to:

Romtec, Inc.
18240 North Bank Road
Roseburg, OR 97470
541-496-3541
romtec1@romtec.com

ROMTEC

SUBMITTAL APPROVAL

Project Name: Westlake Village Community Park Phase II
Plan Set: #18650
Date: 3/29/2016

By signing this Submittal Approval Form, I approve the products and services as specified in the Romtec Scope of Supply and Design Submittal. I understand that any change(s) to the project requested after delivery of this approval to Romtec will require a change order. Please initial where indicated and sign below.

Note: *If you are not the final owner or owner's representative, we strongly recommend that you gain approval from the owner or owner's representative so that all parties are in concurrence on the scope supplied.*

	SECTION	APPROVED	APPROVED WITH COMMENTS
1.	INTRODUCTION		
2.	ROMTEC PRODUCTS & SERVICES		
3.	PRODUCTS & SERVICES NOT SUPPLIED BY ROMTEC		
4.	WARRANTY & LIMITATIONS		
5.	PROJECT DESIGN		

Note: *Please review all color selections within the product data sheets and either confirm or request changes.*

(Signature) (Date)

(Print name) (Title)

ROMTEC

NOTICE TO PROCEED

Project Name: Westlake Village Community Park Phase II
Plan Set: #18650
Date: 3/29/2016

Upon receipt of your notice to proceed and all required documents, Romtec will produce the building and deliver it to the project site on the date you specify, within reasonable timelines, OR Romtec will ship your order approximately 6 - 8 weeks after the date of this notice, whichever is later. Romtec will send confirmation of delivery once the building leaves the Romtec yard and is en-route to the requested delivery site.

Note: *If no date is specified, Romtec will ship your order as soon as it is ready.*

Please fill in the form below and return it to Romtec.

☐ Yes, I want Romtec to produce the specified building and deliver it to the project site on the following date:

_____
(Requested delivery date)

_____
(Signature) (Date)

_____
(Print name) (Title)

_____
(Print company/agency name

ROMTEC

PROJECT CONTACTS

Please assist Romtec by filling in project contact information below.

Project Delivery Information:

Location (City, State): _____

Site Contact #1

Name & Cell Phone #: _____

Email: _____

Site Contact #2

Name & Cell Phone #: _____

Email: _____

Site Name (Park, Company, etc): _____

Site Address: _____

City, State Zip: _____

Directions to Site: _____

_____

_____

Owner Information: Owner of building. If same as Customer write "same."

Company/Agency/Org.: _____

Contact Name: _____

Title: _____

Address: _____

City, State Zip: _____

Office Phone: _____

Mobile Phone: _____

Email: _____

Architect/Engineer Information: Owner's representative.

Company: _____

Contact Name: _____

Title: _____

Address: _____

City, State Zip: _____

Office Phone: _____

Mobile Phone: _____

Email: _____

PROJECT CONTACTS

Installer Information: Contractor installing the building.

Company: _____
Contact Name: _____
Address: _____
City, State Zip: _____
Office Phone: _____
Mobile Phone: _____
Email: _____

BUILDING CODE COMPLIANCE CHECKLIST

***Note**: This checklist is to be completed if applicable.*

Please list any local, non-state, non-federal codes that are unique to your city, municipality, county, etc. that may affect the design of this structure.

Project Name: Westlake Village Community Park Phase II

Location (City, State): Westlake Village, CA

Who did you speak with to obtain the following information?

Name:_____

Title:_____

Phone:_____

Email:_____

Address:_____

_____

Are there any local codes different from UBC?

Building:_____

Plumbing:_____

Mechanical:_____

Electrical:_____

Accessibility:_____

Roof Snow Load:_____

Geotech Report Available (if yes please provide)? Yes_____ No___

Site Address:_____

City & State:_____

INDEX

1. INTRODUCTION

1.01 ABOUT THIS DOCUMENT

1.02 HOW TO USE THIS DOCUMENT

1.03 TYPICAL ROMTEC PROCESS

2. ROMTEC PRODUCTS & SERVICES

2.01 SCOPE OF SUPPLY: PRODUCTS

2.02 SCOPE OF SUPPLY: SERVICES

3. PRODUCTS & SERVICES NOT SUPPLIED BY ROMTEC

3.01 PRODUCTS NOT SUPPLIED BY ROMTEC

3.02 SERVICES NOT SUPPLIED BY ROMTEC

4. WARRANTY & LIMITATIONS

4.01 ROMTEC, INC. LIMITED WARRANTY

4.02 LIMITATIONS OF ROMTEC'S RESPONSIBILITIES

4.03 COPYRIGHT

5. PROJECT DESIGN

5.01 PLAN SET

5.02 CALCULATIONS

5.03 PRODUCT DATA SHEETS

5.03.1 STRUCTURE

5.03.2 EXTERIOR

5.03.3 FIXTURES

5.03.4 ACCESSORIES

5.04 INSTALL MANUALS

1. INTRODUCTION

This section is structured as follows:

1.01 ABOUT THIS DOCUMENT

1.02 HOW TO USE THIS DOCUMENT

1.03 TYPICAL ROMTEC PROCESS

1.01 ABOUT THIS DOCUMENT

1. Document Identification

This Scope of Supply and Design Submittal (SSDS) provided by Romtec, Inc., herein referred to as Romtec, contains the information for the project listed below:

Project:	Westlake Village Community Park Phase II
Location:	Westlake Village, CA
Document Date:	3/29/2016
Revision:	5

2. The Scope of Supply & Design Submittal is defined by Romtec as follows:

A. Complete document superseding all others

This document is Romtec's complete Scope of Supply and Design Submittal for the above project. There is no other document that contains this information. This document supersedes all other documents, correspondence and verbal communication as to Romtec's scope of supply for products and services.

B. Based on customer supplied design criteria

Romtec has designed the building described herein to meet the specific design criteria provided to Romtec by the customer and/or the customer's representative. Romtec's supply of products and services is related exclusively to these design criteria.

C. Supplied to customer only

Romtec supplies this document exclusively to the direct customer (the party signing Romtec's purchase order or the Government-issued purchase order), herein referred to as the customer, and not to any other party associated with this specific project. Any other party reviewing this document is informed that the information within it is Romtec's communication with the customer and no other party. Romtec's entire supply and design, as described herein, are for the customer only and no one else. Romtec will not provide any other products and/or services related to the building to any other party. Romtec agrees only to the supply and design described herein.

1.02 HOW TO USE THIS DOCUMENT

1. Be sure the document date and revision are current.

It is the responsibility of the person(s) using the SSDS to ensure that the latest revision of the document is being used. Contact Romtec if there is any question about the most current version.

Note: *The PDF provided is intended to allow for as many printed or electronic copies as needed. Please retain printed or electronic copies of these documents, including signed documents, for your records. It is not Romtec's responsibility to email, print, and/or send extra copies of documents that are included in the PDF.*

2. Carefully review all sections of this document.

A. Building Components

Customer shall review the plan set to ensure all building components are identified and located to customer's satisfaction. Customer is responsible for clearly marking any discrepancies and returning those markups to Romtec. Documentation of additional items not supplied by Romtec is customer's responsibility. At Romtec's option, locations and dimensions of such items supplied by others may be represented in the plan set. The customer is responsible for determining and maintaining the accuracy of all information pertaining to items represented in the plan set which are not supplied by Romtec.

B. Utility Location

At Romtec's option, the location of utilities entering the building may be shown on the plans for reference.

3. How to make comments and request changes.

Romtec **REQUIRES** the customer to provide a complete itemized list in the supplied comment log excel document, to recap **ALL** of the courtesy review comments that are noted on the redlined plans and product data sheets. Each redline comment must be numbered on the plan set/data sheet and correspond to an explanation on the written document. In addition, Romtec requires the customer to provide the redlined plan set and specific product data sheets with the noted changes.

4. Format

Romtec's plan sets are produced on 11" X 17" format. If another format is requested, there will be an additional fee depending on the format size and quantity requested. Romtec's content on each page, the order in which the pages appear, and the page numbering is final and will not change.

1.02 HOW TO USE THIS DOCUMENT

5. Plan Set Status: PRELIMINARY vs. FINAL

A. Preliminary

If the plan set within this Scope of Supply and Design Submittal is labeled "PRELIMINARY", then this document should not to be used for construction or to pull permits and it is not suitable for any purpose other than to review, revise, and return to Romtec for the next round of submittals.

B. Final

If the plan set within this Scope of Supply and Design Submittal is labeled "FINAL", then this document contains the entire final plan set for the Romtec building. The final plan set is to be submitted for approval by the reviewing authority (if applicable) and is for use in construction of the building.

6. Approval & notice to proceed

A. How to approve the SSDS

To approve the SSDS, you must fill in the Submittal Approval form. Please initial, date and sign where requested, and return to Romtec. Once you have approved the SSDS and provided Romtec with notice to proceed, Romtec will finalize the construction plans and produce the building.

B. Upon receipt of SSDS approval and notice to proceed

The customer agrees that, following customer's approval of this document, there can be no modification to the products and services described herein without a written change order. The customer acknowledges that change orders will incur additional charges to the customer (i.e., additional production labor & overhead, design & engineering costs and charges for non-standard goods - goods that Romtec does not inventory - already purchased or incorporated into the order) and may cause delays in Romtec's delivery of the products and services described herein as well as any products and services required by the change orders.

C. Allowance to perform is acceptance of this supply and design

By allowing Romtec to produce the order to the point of deliverability, the customer accepts this SSDS as the only document that defines Romtec's offering associated with customer's purchase order for products and services listed herein to be supplied by Romtec.

1.03 TYPICAL ROMTEC PROCESS

Below are the typical steps in the process to design, price, approve, produce, and deliver a Romtec building:

1. Customer (or customer's representative) works with Romtec to develop the design criteria for the project.
2. Romtec produces a preliminary design and quotation for the customer.
3. Customer sends purchase order to Romtec.
4. Romtec produces Scope of Supply and Design Submittal (SSDS) and sends to customer for review.
5. Customer reviews SSDS, sends written comments to Romtec.
6. Based on customer comments, Romtec revises the SSDS and issues change orders if necessary. Romtec resubmits to the customer.
7. Customer sends formal approval of SSDS to Romtec.
8. Customer sends Notice to Proceed with desired delivery date to Romtec.
9. Romtec begins manufacturing the building and sends projected delivery date to customer.
10. Customer's contractor prepares project site for installation of building.
11. Romtec delivers building to project site.
12. Customer's contractor installs building.

2. ROMTEC PRODUCTS & SERVICES

This section is structured as follows:

2.01 ROMTEC PRODUCTS

2.02 ROMTEC SERVICES

2.01 ROMTEC PRODUCTS

The plan set and product data sheets included in the SSDS define the products used in the Romtec building kit. The data sheets correspond with the bill of materials (packing list).

1. Product Data Sheets

The product data sheets for the products and materials Romtec provides in the building kit are published by the various product/material manufacturers. Romtec has made every effort to ensure the accuracy of the information contained in the product data sheets, however there may be discrepancies, since manufacturers can change their product specifications without notice to Romtec. Romtec reserves the right to make substitutions of equivalent materials and items without notice. Please contact Romtec if you have any questions about the information in the product data sheets.

2. Product Data Sheets Not Included

Product data sheets for Romtec supplied fasteners, anchor bolts, saddle brackets, hold downs, etc are not included. Refer to the plan set for location and size. These fasteners are included with the kit and are listed on the packing List. Typical fasteners such as nails, staples, screws, etc. are not supplied by Romtec. Please contact Romtec with any questions regarding supply.

Note: *Product data sheets for any items that are to be provided by installer or owner will NOT be provided in this document.*

3. Block

A. Romtec provides an 8% overage on each block shape and 10% for corner blocks. This is beyond the block quantities stated on the block sheets of the plans. Any additional block required by the installer can be ordered through Romtec with a change order.

B. The installer may be required to cut block to achieve the required shapes necessary for construction. For example, this can include notching block for bond beams or cutting full blocks in half. Not all block suppliers provide the same standard shapes. Romtec is not responsible for any additional work required of the installer.

4. Metal Roofing

A. Metal roofing on a building in a "corrosive environment" may lead to premature paint failure and rust problems. Metal roofing companies define a corrosive environment as either within a ¼ mile of a body of salt water like the ocean, or within proximity of an industrial process site like a paper mill where corrosive substances are present in the air and rain.

2.01 ROMTEC PRODUCTS

B. **Romtec does not provide a warranty for metal roofing.** Metal roofing manufacturers intend for their roofing to be installed immediately upon delivery from the factory. All project circumstances are different and Romtec cannot guarantee that metal roofing is installed within the timeframe allowed from the manufacturer. Therefore, Romtec does not warrant metal roofing unless it is from Custom Bilt Metals.

C. **Romtec will provide a warranty for metal roofing from the manufacturer Custom-Bilt Metals.** Custom-Bilt roofing is covered under Romtec's one year standard warranty assuming the following conditions are met and can be documented:

- **i.** Product cannot be wrapped in an airtight manner, i.e. shrink wrapped.
- **ii.** Product needs to have air movement available so no water is trapped between panels.
- **iii.** Product/crate needs to be stored with one end elevated to allow for runoff of any moisture or condensation that may develop.
- **iv.** The duration of jobsite storage will not exceed one year.

5. Trusses

A. Trusses provided by Romtec may or may not be delivered to the site with a boom truck for placement on the finished walls. Not all truss manufacturers include crane time in their supply. Romtec is not responsible for providing a crane for lifting the trusses at the building site. If limited crane time is included with the truss manufacturer's supply and the installer goes beyond the allotted time, it is the installer's responsibility to pay for this overage.

6. FRP Materials

A. If FRP panels are included in the design of this building, Romtec has also supplied the glue and pins for installation. Romtec has supplied a gallon of adhesive per panel which is significantly more than the manufacturer recommended two-thirds of a gallon per panel. Romtec has also supplied extra pins beyond the recommended amount per panel (see plans for installation instructions). If the installer uses more adhesive and/or pins than recommended, then it is the installer's responsibility to supply the additional materials.

2.01 ROMTEC PRODUCTS

7. Stone Veneer

A. Stone veneer will crack over time due to multiple factors including building settlement, water infiltration and freezing, wall movement, and other factors. Romtec cannot guarantee that the stone veneer on the building will not eventually crack. Romtec considers the repairing of cracks as a maintenance issue, and not a warranty issue. In other words, the stone veneer on the building will eventually crack and it will not be covered under the building warranty.

2.02 ROMTEC SERVICES

This section explains the engineering services provided by Romtec during the design of the building.

1. Design

A. Romtec develops plan sets

Romtec Engineering will develop a plan set based on initial information, design criteria and subsequent markups received from the customer. If more than one revision is requested and/or required, additional design fees will apply. If included in the Romtec proposal, one additional sealing of the plan set and calculations is submitted to the customer after review comments are received and responded to.

B. Romtec compiles and provides product data sheets

Romtec has a section in the SSDS for the components included in the Romtec building. Generally a component will be defined by its corresponding technical cut sheet and will include an image of product when available. The data sheet section defines the products included with the building kit and must be referred to in conjunction with the plans when reviewing the SSDS.

C. Romtec processes the customer redlines and review comments

Romtec processes the information from the markups the customer provides on the plans and product data sheets. The revisions are then made to ensure that the customer receives the building and features desired. Revisions to the SSDS are made solely at Romtec's discretion.

D. Additional copies, re-sealing, change in format request

If sealing of the plan set is included in Romtec's proposal, Romtec provides three identical sets of wet stamped drawings and calculations upon receipt of submittal approval and notice to proceed. Romtec's standard plan set format is 11" x 17". Charges for additional services may vary depending on the scope and quantity of the services requested and/or required.

2. Production

A. Production of the building kit

After receipt of submittal approval and notice to proceed, Romtec puts the approved scope of supply into production. All approved components are fabricated and packaged for delivery to the project site.

2.02 ROMTEC SERVICES

B. Truck Delivery

Delivery of the building requires access by a semi truck and trailer to the project site or to an alternate site that has been designated by mutual agreement between Romtec and customer. The customer shall inform Romtec in a timely manner of any potential problem accessing the delivery site, including size and weight limitations on any roads, bridges and driveways leading to the site.

Accommodation of special delivery requirements may result in an increase in the quoted shipping cost. Failure of the customer to notify Romtec of any special delivery requirement that results in delivery delays will result in additional shipping charges. Romtec is not responsible for installation delays resulting from delivery delays.

The building kit will be delivered to your "truck accessible" site by semi-truck, in shrink wrapped pallets, labeled with the project name and the stage of construction. The building installer is responsible for unloading the building kit and must have a forklift with minimum 6,000 lb. capacity and 6 ft. fork extensions to unload materials shipped from Romtec.

Note: Romtec is not responsible for any construction delays and subsequent costs if delivery is delayed by the trucking company. Romtec supplies the customer with estimated delivery dates to be confirmed by the shipping vendor. Re-mobilization costs for unloading trucks are to be disputed with the shipping vendor, not Romtec.

C. Shipping List

Romtec will send you a checklist of the items being shipped. Located inside Pallet #1, labeled "STAGE 1- PALLET A" you will find a checklist of parts for each building kit. An inventory of materials **MUST** be performed after receiving the building. If there are any missing or deficient materials, notification must be given directly to Romtec's project manager within five (5) business days of delivery. If notification is not given within the five (5) day period, Romtec will assume that the order was complete and in good order. Contractor or agency takes full responsibility for any missing or deficient materials from that point forward.

Delivery Questions:
Floyd Sackett
Traffic Manager
Romtec, Inc.
541-496-3852,ext. 219.
fsackett@romtec.com

Materials Questions:
Dave Smith
Project Manager
Romtec, Inc.
541-496-3541 ext. 244
romtec11@romtec.

3. PRODUCTS & SERVICES NOT SUPPLIED BY ROMTEC

This section is structured as follows:

3.01 PRODUCTS NOT SUPPLIED BY ROMTEC

3.02 SERVICES NOT SUPPLIED BY ROMTEC

3.01 PRODUCTS NOT SUPPLIED BY ROMTEC

The specific products and materials to be supplied by Romtec are unique to this building and are shown in the product data sheets.

Unless otherwise specified, the following products and materials are NOT supplied by Romtec.

A. All items not listed in Romtec Products.
B. Any item listed as supplied by "installer", "contractor", "owner", or "others".

2. Unless specified in the plans or submittals, Romtec does not supply the following:

- Building installation
- Asphalt paving
- Masonry pavers
- Sidewalks
- Landscaping
- Site grading
- Cast-in-place concrete foundations, footings, interior slabs and exterior/entry slabs
- Concrete slab sealer
- Mortar
- Concrete grout
- Rebar
- Latex epoxy paint
- Caulk for siding
- Plumbing rough in, installation and trim
- Electrical rough in, installation and trim
- Drain valves and backflow check valves
- Branch circuit breakers
- Switches & outlets
- Fluorescent tubes for light fixtures
- Drinking fountain guardrails
- Wall hangers for toilets
- Typical fasteners; for example roofing nails, staples, etc.
- Fasteners not included in product packaging
- Irrigation Equipment
- Gutters and downspouts
- Fire alarm and fire suppression equipment
- Lighting equipment not attached to the building
- Clear coat finish for all decking, glulam beams, posts, and extensions
- Specialty tools including rivets guns and/or bending tools for metal roofing
- All other items indicated on final plans or required by building codes which are not specifically stated as supplied by Romtec.

3.02 SERVICES NOT SUPPLIED BY ROMTEC

The services to be supplied by Romtec are unique to this building.

Unless otherwise specified, services NOT supplied by Romtec include:

1. **Any item not listed in Romtec Services.**

2. **<u>Installation of the Romtec building kit</u>**

3. **Design and engineering services for aspects of the project not included in this SSDS, including but not limited to:**

    - Site engineering
    - Site drawings
    - Utility designs and plans
    - Additional plan sets
    - As-built plan sets
    - Operation and maintenance manuals
    - Other related documents and services

4. **Determination of the suitability of the building to the site plan, utilities plan(s) and other documents is not Romtec's responsibility.**

    This Scope of Supply and Design Submittal is limited to the Romtec building; however this document must be considered in its relationship with the overall site. It must be analyzed along with the building's site plan, utilities plan(s) and other documents. Romtec does not provide this analysis, which is the responsibility of the customer and/or the customer's representative. Romtec makes no claim and provides no guarantee that any of the products to be supplied by Romtec will fit on the building's site.

5. **Site Utilities & Other Considerations**

    Romtec will show utilities on the plans such as water, sewer/septic, electrical, gas/propane, etc. to ten (10) feet outside of the building footprint. It is the customer's responsibility to supply adequate water, sewer/septic, electrical and other necessary utility services to within ten feet of the building. Romtec does not supply any part of the utility equipment or connections to utility services, unless such additional work is included in this Scope of Supply and Design Submittal. If utilities are not supplied within the ten foot perimeter, the installer will stub out and cap utility connections to that point for future connection by others. In the event that utilities are not provided or are not operable at the time the building is substantially complete, final payment is due to Romtec. In other words, payment will not be held for any delays outside of Romtec's scope of work.

3.02 SERVICES NOT SUPPLIED BY ROMTEC

6. LEED/Green Submittals:

Romtec does not provide LEED/Green submittals as a standard service. Romtec can assist in providing documentation for products that may meet LEED/Green standards, but Romtec does not provide or fill out LEED credit forms. Unless specifically included in Romtec's proposal and quote, Romtec does not supply materials with the intent of meeting LEED standards. Any changes due to LEED or Green building requirements will result in a change order and increased lead times.

7. Special Inspection

If special inspection, as defined by code, is required per your Building Department or other regulatory agencies, then Romtec can assist but NOT provide this service. Romtec under no circumstance, shall be considered the special inspector, nor shall Romtec pay any fees associated with such. All such fees, costs, and arrangements associated with the special inspection are the responsibility of the owner.

8. As-Built Plan Sets

Romtec does not supply unsealed as-built plan sets as a standard service. Additional fees and lead times are required if unsealed as-built plans are requested.

9. Operation and Maintenance Manuals

Do not discard operation and maintenance manuals provided by some manufacturers in their packaging. If you misplace these manuals and request copies from Romtec, a service fee will be charged.

10. Review of Mix Designs:

Romtec does not provide mix design review for concrete used in construction as a standard service. If requested, Romtec will issue a change order for this service.

11. Site Storage

The owner or contractor must take great care in adequately protecting materials should they be stored for any period prior to installation. The packaging is meant to protect the building during shipment. The building is not packaged for storage. Moisture, direct sunlight and seasonal temperature fluctuations will result in damage to the materials.

The owner or contractor shall store the building in a secure, dry, climate controlled location. If the building is stored outdoors for more than thirty days without adequate protection from the elements, the Romtec Limited Warranty may be voided. If storing the building kit for an extended period,

3.02 SERVICES NOT SUPPLIED BY ROMTEC

all metal roofing must be unpackaged, separated, and completely dried to prevent moisture damage from prolonged storage (see manufacturer's storage requirements).

Delivery Questions:
Traffic Manager
Romtec, Inc.
541-496-3852,ext. 219.
fsackett@romtec.com

Materials Questions:
Project Manager
Romtec, Inc.
541-496-3541 ext. 244
romtec11@romtec.com

4. WARRANTY & LIMITATIONS

This section includes all information on Romtec's warranty and the limitations of Romtec's responsibilities.

This section is structured as follows:

4.01 ROMTEC, INC. LIMITED WARRANTY
4.02 LIMITATIONS OF ROMTEC'S RESPONSIBILITES
4.03 COPYRIGHT

4.01 ROMTEC, INC. LIMITED WARRANTY

ROMTEC, INC. LIMITED WARRANTY

Materials Manufactured or Installed by Romtec (Seller)

Seller warrants that it will, at its option and in its sole discretion, furnish, F.O.B. Roseburg, Oregon, a replacement for, repair or refund the purchase price to the owner of any goods of its manufacture or part or portion thereof proved to its satisfaction to be defective in workmanship or material (If Romtec is installing the materials, a warranty of 1 year from the date of final acceptance of the work shall apply to the installation work) under normal use and service within one year from the date of final acceptance by the customer or property owner or 1 year and 6 months from the date of delivery (or the date Romtec could have delivered should the customer request and Romtec agree to store the goods for an agreed upon time) to the customer or property owner whichever comes first, provided that notice of such defect is given to Seller within such limited period.

There is no implied warranty of merchantability or implied warranty of fitness for a particular purpose or any other warranty, express or implied, labor, transportation or other costs or expenses relating to such replacement or such repair, including any indirect, incidental, delay or consequential damages.

Components Resold or Supplied with Romtec Materials

Certain components are warrantable directly by the original manufacturer for periods between 90 days and 1 year. The term of such warranties are identified in accompanying documentation. Replacement for, repair or refund of defective workmanship or material under normal use shall be remunerated directly with the manufacturer of the component. Examples of components would be locksets, plumbing fixtures, electrical fixtures, etc.

This warranty extends only to Romtec's direct customer (as named in the Romtec Purchase Order) herein called "customer" and not to any person or entity with whom customer has business relationships, or any party other than customer.

Claims

The following provisions apply to all claims.

a. Freight Damage Claims

If Romtec is not installing and agrees to ship goods under any agreement whereby Romtec remains responsible for risk of loss or damage while the goods are in transit, any claims of customer for damage in transit shall be deemed waived and released by the customer, unless made in writing endorsed on the bill of lading at the time customer accepts delivery of the merchandise. CUSTOMER SHOULD CAREFULLY INSPECT THE MERCHANDISE BEFORE ACCEPTING DELIVERY.

b. Claims of Defective Manufacture

4.01 ROMTEC, INC. LIMITED WARRANTY

Claims that the merchandise was incorrectly manufactured or that is defective in any way must be made directly to Romtec on a product-by-product basis. All claims must be made within 72 hours of the defective condition, or the time when the defect should have been discovered, whichever is earlier. All claims must include the following:

1. Detailed description of the specific problem, failure, or other event giving rise to the claim.
2. Supporting photographs or videos.
3. Specific location.
4. Names and phone numbers of individuals who can substantiate the claim but who do not work for customer.

c. Claims for Missing Materials

If Romtec is not installing, the customer must inventory the shipment of materials upon arrival at the job site for completeness. Claims for missing or deficient materials shall be reported to Romtec within 5 business days of delivery. If Romtec does not receive notice of missing or deficient materials within the 5 business days Romtec will assume that all the materials were present and in good order. After the 5 day period the customer assumes responsibility for any missing or deficient materials.

d. Claims for Damaged Materials Stored Prior to Installation

Building Materials are packaged for shipment only and should be installed within 30 days of delivery. If Romtec is not installing or delayed by customer from installing, and the materials are stored outdoors for more than 30 days, all warranties expressed or implied are null and void. Customer assumes all responsibility in adequately protecting stored materials prior to installation and hereby releases Romtec from any claims arising from inadequately protected materials.

e. Action in Event of Established Claim

Liability of Romtec shall be limited to, at its option, repair or replacement of the goods.

f. No Third Party Claims

Under no circumstance shall Romtec be responsible for any damage claims by any party other than claims by Romtec direct customers.

Release and Hold Harmless

Customer releases and agrees to defend, indemnify, and hold Romtec harmless from and against any and all claims, demands, actions, and causes of action for any matters arising out of or connected with the Materials whereby the customer is responsible for errors or omissions.

4.02 LIMITATIONS OF ROMTEC'S RESPONSIBILITIES

1. Romtec is the building designer and building kit supplier.

Within this document are references to "Romtec" and "Installer." Romtec is the building designer and building kit supplier. "Installer" or "Contractor" is the party erecting the building, NOT Romtec.

2. Romtec's responsibilities are to its direct customer only.

Romtec will communicate with project subcontractors, engineers, owners and any other parties only through a designated representative of the customer.

3. Complete review of this document will require information contained in other documents not supplied by Romtec.

Romtec does not supply various documents related to the project such as the site plan, topographical map, the utilities plan and other documents. These documents are generally supplied by the owner or agency that put the project out to bid.

Thorough understanding of the environment in which the building will be installed and operated requires complete knowledge of information included in these related documents.

Such documents may have been supplied to Romtec by the customer and by other parties on behalf of the customer. Romtec has taken the information in these documents as fact. However, Romtec does not know the accuracy, nor take any responsibility for any information included in any of these other documents.

The discovery of any error or omission in documents supplied to Romtec by any party on behalf of the customer may require, solely at Romtec's discretion, issuance of a change order to cover associated changes in the building design and materials, delays in delivery and installation of the building and/or additional charges to the customer by Romtec.

Romtec shall not be liable for any deficiency in the building design, materials (products and components), building kit delivery, building installation and/or any other part of the project that results from any error or omission in documents supplied to Romtec by the customer and by other parties on behalf of the customer at any time.

4. Compliance with building codes is limited

This Scope of Supply and Design Submittal may contain references to various building codes applicable at the time this document was produced. Romtec's responsibility to meet the requirements contained in these codes extends only to the revisions of these codes listed in this document. Any change to the building design and/or materials, components or products resulting from a revision of a building code occurring after this document is approved will result in a change order.

4.02 LIMITATIONS OF ROMTEC'S RESPONSIBILITIES

Local building departments reserve the right to modify national building codes to meet the needs of their area. There is no way for Romtec to always know what the requirements of the reviewing authority will be. Romtec has made every effort to meet local codes. Any revision to the design after submittal approval and notice to proceed will result in a change order.

If the customer does not notify Romtec, at or before the customer provides Romtec with SSDS approval and notice to proceed, of any building codes/regulations unique to customer's area that are not included in state or national codes, a change order will be issued for any costs Romtec incurs in order to comply with such codes or irregularities.

If health department permits are required for any food related services within the building, Romtec encourages the customer to submit preliminary plans for review and comments before the plans are sealed and the building is produced. Any changes to the design after submittal approval and notice to proceed, resulting from a health department review, will result in a change order.

5. Romtec is not responsible for the review or understanding of this document by the customer, the customer's representative, architects, engineers and others associated with the project.

The customer, architects, engineers, owner and all other parties interested in the project are urged to contact Romtec at any time, with any questions about the building described herein, or about Romtec's responsibilities related to the project.

Romtec will make every effort to ensure that all parties have access to complete information about the building; however, Romtec is not responsible for the distribution of this document and/or misunderstandings, errors and costs that arise from an incomplete understanding by any party, of the information contained in this document, including past revisions of this document.

6. Romtec evaluates ADA guidelines only within the footprint of the Romtec structure supplied.

The building structure described herein is designed to ADA guidelines. Romtec does not evaluate ADA compliance beyond ten feet from the building perimeter. The customer is responsible for complying with ADA guidelines to and from the Romtec structure.

7. Site Conditions

Except for those site conditions expressly stated in this Scope of Supply and Design Submittal, Romtec has no knowledge of existing conditions at the project site. If at any time it is determined by Romtec that any condition at the project site that was not previously disclosed to Romtec may affect the design of the building, the materials supplied and/or the building installation,

4.02 LIMITATIONS OF ROMTEC'S RESPONSIBILITIES

Romtec may, at its discretion, issue change orders to accommodate all necessary changes to the building and/or the installation. Such change orders will result in additional charges by Romtec to the customer and possibly delay of project completion.

A. Site Topography

Unless otherwise stated in this document, the building site shall be level and the finish grade of the ground around the building site shall slope away from the building for drainage. Romtec has assumed this in the building design.

If the site is not level or lacks sufficient drainage, Romtec requires that a site plan with topography be delivered to Romtec operations before final approval and sealing of the building plans by Romtec.

B. Site Water & Drainage

In addition to the finish grade sloping away from the building as mentioned above, additional measures to control surface water and groundwater at or near the site may be required.

Although Romtec does not know of specific site conditions that may require such analysis, a geotechnical report from a qualified engineer may be necessary. If a report is necessary, Romtec requires that the report be delivered to Romtec operations before the final approval and sealing of the building plans in order to review the basis of design for soil bearing. Any re-design or request for change after plans are approved will result in a change order.

A report of excess surface water or groundwater at the site delivered to Romtec after the plans have been sealed will result in a change order and additional charges to the customer for re-design and re-sealing of the plans.

Note: *Romtec does not supply or install rain gutters, downspouts or rain-water drain lines with the building. If these are to be supplied and installed by others, the discharge of water from drain lines must be far enough away from the building so as to not affect the soil around or under the building.*

C. Site Soil Bearing

Unless otherwise stated in this document, the soil on which the building will be constructed shall support a minimum of 1500 pounds per square foot. Romtec has assumed this in the building design.

A report of inadequate soil conditions at the site delivered to Romtec after the plans have been sealed will result in a change order and

additional charges to the customer for re-design and re-sealing of the plans.

***Note**: If Romtec receives signed approval documents, and seals the plan set and calculations, and is then sent a soils report which requires a re-sealing or re-design, this will incur a change order.*

D. Disposal of Packaging, Extra Building Materials

Installer is responsible for disposal of any of the building kit's packaging materials and any extra building materials supplied by Romtec or installer that are left over from installation of the building. Packaging and materials not supplied by Romtec or installer are not the responsibility of installer. Prior to building installation, customer shall inform Romtec of any recycling requirements and/or disposal limitations.

Accommodation of special recycling requirements that are communicated to Romtec after the plans have been finalized may result in a change order and additional charges for this service.

E. Disposal of Previously Contaminated Digging Spoils and Other Site Debris

Under no circumstance is Romtec or the installer responsible for the previously contaminated soil or other materials originating on the project site. Prior to any site excavation, customer shall inform Romtec of the condition of soil and/or other materials at the site. Customer shall disclose to Romtec any regulations, limitations or findings of any kind that are related to the condition and/or to its distribution and/or disposal of site soil and/or other materials.

If at any time it is determined by anyone that, for any reason, the soil or other materials at the site require special handling of any kind, it shall become the responsibility of the customer to execute and pay for such special handling.

In the event of discovery of previously contaminated site materials requiring special handling, Romtec reserves the right to stop work on the project and inform the customer and/or regulatory authority of the discovery. Work stoppage due to discovery of site materials requiring special handling shall not be grounds for delay claims by customer against Romtec or Installer.

F. Underground Lines

Romtec and/or installer shall not be responsible for the location, disturbance, or damage of any unidentified and/or unknown underground lines of any kind. Romtec and/or installer shall only be

responsible for underground lines or utilities identified and located by regulatory agencies whose responsibility is to identify and locate such lines and utilities. Any costs associated with any action which results from the incidental discovery, disturbance, or damage of any previously unidentified and/or unknown underground lines or utilities of any kind, including any pipeline or other transportation conduit, shall be solely the customer's responsibility to bear.

8. Romtec does not submit for or pay fees for building permits.

As required by building codes and the reviewing authority, customer shall submit the plan set and product submittals to the reviewing authority for approval (if applicable). Customer shall pay all charges related to the plan set review and building permit(s). Customer shall notify Romtec that building permit(s) and final approved plan set are available. No other documents shall be used for installation of the building.

9. Installation time is not specified.

Romtec designs and manufactures its buildings for quick and complete installation. However, Romtec makes no representation as to how long it will take to prepare the site, install the building, connect the building's electrical systems to utilities not supplied by Romtec, or to receive final approval of the completed building form regulatory agencies.

10. Romtec is not responsible for determining the methods and equipment used in site preparation and installation.

All methods and equipment used at the site are the responsibility of the installation contractor/subcontractors, not Romtec. Romtec does not know or specify what site preparation or component installation methods or equipment should or will be used.

11. Implementation of the building plans contained in this document requires a thorough knowledge of applicable national, state and local building codes and methods of construction required for the building.

Romtec is not responsible for ensuring that every conceivable construction detail or site condition is reflected in the plans or that the customer, customer's representative, building installer and trade subcontractors have the necessary knowledge of applicable codes to perform construction and/or installation work required by such codes.

12. Discrepancies

During the installation of the building, if the installer discovers a discrepancy in the plans, missing materials, or a shortage of materials, installer is to notify Romtec immediately and report the problem before proceeding. Romtec will then advise the installer on a course of action.

4.02 LIMITATIONS OF ROMTEC'S RESPONSIBILITIES

***Note**: If the installer purchases materials to replace missing or shorted items without notifying Romtec or having Romtec's approval, Romtec will not be liable for reimbursement.*

13. Code Issues

If during construction of the building the inspector declares a discrepancy or code issue, the contractor is to contact Romtec immediately and report the problem before proceeding.

14. Theft or Vandalism

In the event of theft or vandalism, please notify Romtec. Romtec is not responsible for losses of materials/equipment due to theft or vandalism. Romtec will assist in replacing lost material.

15. Metal Roofing

Romtec does not provide a warranty for metal roofing. Metal roofing manufacturers intend for their roofing to be installed immediately upon delivery from the factory. All project circumstances are different and Romtec cannot guarantee that metal roofing is installed within the timeframe allowed from the manufacturer. Therefore, Romtec does not warrant metal roofing unless it is from Custom Bilt Metals.

Romtec will provide a warranty for metal roofing from the manufacturer Custom-Bilt Metals. Custom-Bilt roofing is covered under Romtec's one year standard warranty assuming the following conditions are met and can be documented:

- Product cannot be wrapped in an airtight manner, i.e. shrink wrapped.
- Product needs to have air movement available so no water is trapped between panels.
- Product/crate needs to be stored with one end elevated to allow for runoff of any moisture or condensation that may develop.
- The duration of jobsite storage will not exceed one year.

16. Stone Veneer

Stone veneer will crack over time due to multiple factors including building settlement, water infiltration and freezing, wall movement, and other factors. Romtec cannot guarantee that the stone veneer on the building will not eventually crack. Romtec considers the repairing of cracks as a maintenance issue, and not a warranty issue. In other words, the stone veneer on the building will eventually crack and it will not be covered under the building warranty.

4.03 COPYRIGHT

These copyrighted documents and the building designs and design concepts contained within these documents are the exclusive property of Romtec, Inc., which reserves all rights to their communication, distribution, reproduction, revision and use. These construction drawings and/or these designs may not be communicated, distributed, reproduced, revised or adapted in any way without the express written consent of Romtec, Inc. Any use of these plan sets and/or designs for any purpose other than the construction of this specific building order supplied by Romtec, Inc. is prohibited.

5. PROJECT DESIGN

This section is structured as follows:

5.01 PLAN SET
5.02 CALCULATIONS
5.03 PRODUCT DATA SHEETS
5.03.1 STRUCTURE
5.03.2 EXTERIOR
5.03.3 FIXTURES
5.03.4 ACCESSORIES
5.04 INSTALL MANUALS

5.01 PLAN SET

Current plan set to follow.

ROMTEC

PLAN SET NO

18650

2084 - SIERRA III MULTI-USER RESTROOM W/ CONCESSION

WESTLAKE VILLAGE COMMUNITY PARK
31107 EAST THOUSAND OAKS BLVD
WESTLAKE VILLAGE, CALIFORNIA
APN 2056-001-014

© 2015 ROMTEC, INC. ALL RIGHTS RESERVED. THESE PLANS AND DRAWINGS MAY NOT BE REPRODUCED, ADAPTED OR FURTHER DISTRIBUTED, AND NO BUILDINGS MAY BE CONSTRUCTED FROM THESE PLANS, WITHOUT THE WRITTEN PERMISSION OF ROMTEC, INC.

REV	DATE	BY	DESCRIPTION
4	3/28/16	JS	ENGINEER REQUIRES

3-28-16

REGISTERED PROFESSIONAL ENGINEER
JASON M. SMITH
C 048806
EXP. 12-16
CIVIL
STATE OF CALIFORNIA

Precision Structural Engineering, Inc.
www.jhs@structure1.com
Klamath Falls, Oregon
250 Main Klamath Falls, Oregon 97603
Phone: (541) 850-6300 Fax: (541) 850-6233
www.jhs@structure1.com
ROMTEC 216-23

ROMTEC
18240 NORTH BANK ROAD
ROSEBURG, OR 97470
(541)-496-3541 FAX (541)-496-0803

© 2019 ROMTEC, INC. ALL RIGHTS RESERVED. THESE PLANS AND DRAWINGS MAY NOT BE REPRODUCED, ADAPTED OR FURTHER DISTRIBUTED, NO BUILDINGS MAY BE CONSTRUCTED FROM THESE PLANS, WITHOUT THE WRITTEN PERMISSION OF ROMTEC, INC.

PROJECT: 2084 - SIERRA III MULTI-USER RESTROOM W/ CONCESSION
WESTLAKE VILLAGE COMMUNITY PARK
31107 EAST THOUSAND OAKS BLVD
WESTLAKE VILLAGE, CALIFORNIA
APN 2056-001-014

SHEET TITLE:
COVER SHEET

PLAN SET#: 18650
DATE: 12/09/2015
DRAWN BY: CR
SHEET NO. G0

ROMTEC 18240 NORTH BANK ROAD - ROSEBURG, OR 97470
(541)-496-3541 FAX (541)-496-0803

CUSTOMER: CITY OF WESTLAKE VILLAGE -- CONTACT AUDREY BROWN
BUILDING: 2084 - SIERRA III MULTI-USER RESTROOM/CONCESSION
LOCATION: 31107 EAST THOUSAND OAKS BLVD
LOCATION: WESTLAKE VILLAGE, CALIFORNIA 91361

NOTE:
THESE PLANS AND THIS DESIGN ARE THE PROPERTY OF ROMTEC, INC. ANY USE OF THESE PLANS AND/OR THIS DESIGN FOR ANY OTHER PURPOSE THAN THE CONSTRUCTION OF A BUILDING SUPPLIED BY ROMTEC, INC. IS PROHIBITED.

GENERAL NOTES:

1. THIS PROJECT SHALL COMPLY WITH ALL 2013 CALIFORNIA BUILDING CODES AND STANDARDS IDENTIFIED ON SHEET G2. ALL WORK SHALL MEET OR EXCEED INDUSTRY STANDARDS FOR MATERIALS, WORKMANSHIP, ETC.

2. CONTRACTOR SHALL REVIEW THE DRAWINGS THOROUGHLY BEFORE PROCEEDING WITH ANY WORK. ANY DISCREPANCIES FOUND WITHIN THESE DOCUMENTS SHALL BE BROUGHT TO THE IMMEDIATE ATTENTION OF ROMTEC. CONTRACTOR SHALL NOT PROCEED WITH ANY WORK HE KNOWS TO BE IN CONFLICT WITH OTHER WORK, OR IS NOT APPROVED BY CODE, UNTIL RESOLVED BY ROMTEC OR THE ENGINEER/ARCHITECT.

3. CONTRACTOR SHALL MAINTAIN GENERAL LIABILITY INSURANCE AND WORKER'S COMP. INSURANCE AS PER SPECIFIC STATE MINIMUM REQUIREMENTS.

4. FOOTINGS SHALL BE CONSTRUCTED ON UNDISTURBED NATIVE SOIL OR ENGINEER APPROVED FILL. CONTRACTOR TO VERIFY ASSUMED SOIL BEARING CAPACITY NOTED ON SHEET G2. SHOULD SOIL NOT MEET OR EXCEED THE ASSUMED SOIL BEARING CAPACITY, CONTRACTOR TO MODIFY SOIL CONDITIONS TO SATISFY CRITERIA OR NOTIFY THE STRUCTURAL ENGINEER TO REVISE DESIGN PER CONDITIONS ENCOUNTERED. BACKFILL AROUND BUILDING TO PROVIDE SLOPE AWAY FROM BUILDING NOT LESS THAN A 5% SLOPE FOR A MINIMUM DISTANCE OF 10' FROM THE BUILDING, PER 2013 CBC 1804.3.

5. CAST-IN-PLACE CONCRETE: 3000 PSI MINIMUM COMPRESSIVE STRENGTH AT 28 DAYS 4" +/- 1" SLUMP, WITH MAX 3/4" AGGREGATE, AND TESTED IN ACCORDANCE TO MEET ACI 318. FINE BROOM FINISH INTERIOR SURFACES AND EXTERIOR SLABS. JOINTS REQUIRED IN FLAT WORK, SEE SHEET A5.1 FOR REQUIREMENTS.
CMU BLOCKS ARE MANUFACTURED TO ASTMC90-02 STANDARDS WITH A MIN COMPRESSIVE STRENGTH Fm = 1500 PSI.
ALL CMU BLOCKS MUST BE FULLY GROUTED AND NOT BE WETTED.
MASONRY (CONCRETE) GROUT: 3000 PSI MINIMUM COMPRESSIVE STRENGTH AT 28 DAYS 9" +/- 1" SLUMP, WITH MAX 1/2" AGGREGATE, AND TESTED IN ACCORDANCE TO MEET ACI 318. FINE OR COURSE GROUT MAY BE USED IN ACCORDANCE WITH 2013 CBC.

6. ANCHOR AND MACHINE BOLTS SHALL BE ASTM A307. SCREWS AND MACHINE BOLT CALLOUTS ARE MINIMUM SIZE SIZE ALLOWED, ACTUAL SIZE MAY VARY. TS STEEL BEAMS SHALL BE ASTM A500 GRADE B, Fy = 46 ksi. WIDE FLANGE BEAMS SHALL BE ASTM A992, Fy = 50 ksi. STEEL PLATES & SHAPES SHALL BE ASTM A36, Fy = 36 ksi. CONCRETE REINFORCING STEEL (REBAR): 60 ksi. (GRADE 60). WOOD FRAMING SHALL BE #2 & BTR DOUGLAS FIR, UNO. GLU-LAM BEAMS SHALL BE GRADE 24F-V4.

7. QUESTIONS CONCERNING MATERIALS OR CONSTRUCTION CONTACT ROMTEC TECHNICAL ASSISTANCE AT: 541-496-3541

8. ROMTEC SCOPE SUPPLY AND DESIGN SUBMITTAL (SSDS) IDENTIFY SPECIFIC MODEL, MANUFACTURER & BRAND OF ALL PLUMBING AND ELECTRICAL FIXTURES AND ACCESSORIES. REFER TO THE SSDS FOR SPECIFIC LIST OF ITEMS SUPPLIED BY ROMTEC, ANY ITEMS NOT LISTED IN THE SSDS IS ASSUMED SUPPLIED BY THE INSTALLER.

9. THE OWNER / CONTRACTOR MAY EXERCISE DISCRETION IN SELECTING THE FINAL LOCATION FOR NON-DIMENSIONED ACCESSORIES AND FIXTURES (E.G., LIGHTS, COMFORT HEATERS, ETC.)

10. CONTRACTOR TO PROVIDE AND INSTALL PORTABLE FIRE EXTINGUISHERS PER FIRE CODE 906.

ABBREVIATIONS

AB	ANCHOR BOLT	L	STRUCTURAL STEEL ANGLE	SD	SOAP DISPENSER
AFF	ABOVE FINISHED FLOOR	LAV	LAVATORY	SIP	STRUCTURAL INSULATED PANEL
ATS	AUTOMATIC TRANSFER SWITCH	LF	LIGHT FIXTURE	SJ	SAW JOINT
BOT	BOTTOM	MBP	MAIN BREAKER PANEL	SM	SHEET METAL
BP	BREAKER PANEL	MD	MAIN DISCONNECT	S4S	SURFACED FOUR SIDES
CJ	CONTROL JOINT	MIN	MINIMUM	SS	STAINLESS STEEL
CO	CLEAN OUT	MIR	MIRROR	SST	STRUCTURAL STEEL TUBE
CMU	CONCRETE MASONRY UNIT	MO	MASONRY OPENING	TBD	TO BE DETAILERMINED
db	NOMINAL BAR DIAMETER	MR	METAL ROOFING	T&B	TOP & BOTTOM
DD	DIAPER DECK	MS	MILD STEEL	TLT	TOILET
DIA	DIAMETER	ND	NAPKIN DISPOSAL	TP	TOILET PAPER DISPENSER
DISC	DISCONNECT	NTS	NOT TO SCALE	TS	TIMER SWITCH
EM	ELECTRIC METER	OC	ON CENTER	TSCD	TOILET SEAT COVER DISPENSER
EW	EACH WAY	OCEW	ON CENTER EACH WAY	TYP	TYPICAL
FD	FLOOR DRAIN	OSB	ORIENTED STRAND BOARD	UNO	UNLESS NOTED OTHERWISE
FF	FINISHED FLOOR	P	PHOTO EYE	VB	VAPOR BARRIER
FG	FINISHED GRADE	PCC	PORTLAND CEMENT COMPANY	VTR	VENT THROUGH ROOF
FRP	FIBERGLASS REINFORCED PANEL	PL	PLATE	WH	WATER HEATER
GB	GRAB BAR	PSF	POUNDS PER SQUARE FOOT	WWM	WOVEN WIRE MESH
GLB	GLUE LAMINATED BEAM	PSI	POUNDS PER SQUARE INCH	W/	WITH
HB	HOSE BIBB	PT	PRESSURE TREATED		
HD	HAND DRYER	PTD	PAPER TOWEL DISPENSER		
HM	HOLLOW METAL (DOOR)	PV	PHOTO VOLTAIC		
HTR	HEATER	R4S	ROUGH FOUR SIDES		
HYP	HYPOTENUSE	REQD	REQUIRED		
I.S.	INSTALLER SUPPLIED	RO	ROUGH OPENING		
KSI	KIPS PER SQUARE INCH	SCH	SCHEDULE		

SYMBOL LEGEND

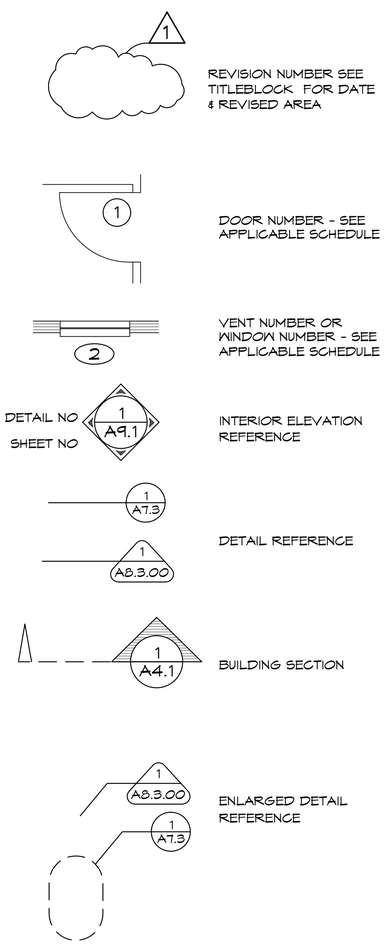

RECYCLE

RECYCLE ALL USED SHIPPING MATERIALS AND LEFT OVER BUILDING MATERIALS

SHEET SCHEDULE

SHEET	CONTENTS
G0	COVER SHEET
G1	GENERAL NOTES & SHEET SCHEDULE
G2	DESIGN CRITERIA & CODE SUMMARY
A2.1	FLOOR PLAN
A2.2	ADA CLEARANCES
A2.3	PARTITION PLAN
A2.4	INTERIOR ELEVATIONS
A2.5	INTERIOR ELEVATIONS
A2.6	INTERIOR ELEVATIONS
A3.1	EXTERIOR ELEVATIONS
A3.2	EXTERIOR ELEVATIONS
A4.1	BUILDING SECTIONS
A4.2	BUILDING SECTIONS
A5.1	FOUNDATION PLAN
A5.2	FOUNDATION DETAILS
A5.3	FOUNDATION DETAILS
A5.4	STRUCTURAL DETAILS
A6.1	DOOR SCHEDULE & DETAILS
A6.2	CONCESSION DOOR DETAILS
A8.1	ROOF PLAN
A8.2	ROOF FRAMING PLAN
A8.3	ROOFING CONNECTION DETAILS
A8.4	CONNECTION DETAILS
A8.5	SKYLIGHT DETAILS
A9.1	INTERIOR WALL FINISH PLAN
A9.2	INTERIOR WALL FINISH DETAILS
P1	PLUMBING SCHEDULE
P2	PLUMBING PLAN
P3	PLUMBING RISER DIAGRAM
M1	EXHAUST FAN PLAN
E1	ELECTRICAL SCHEDULE
E2	ELECTRICAL PLAN
E3	ELECTRICAL PANEL
B1-B4	BLOCK PLAN

REV.	DATE	BY	DESCRIPTION
4	03/28/2016	JS	G2, A3.1, A3.2, A5.4
3	03/17/2016	CR	A2.4,A2.5
2	03/02/2016	CR	G1,A2.4,P1,P2,P3
1	01/20/2016	TH	A2.5, A2.6, A4.1, A6.1, A8.3, A9.1

REV	DATE	BY	DESCRIPTION
1-2	3/28/2016	SAK	BUILDING REVIEW COMMENTS & REVISIONS

3-28-16
REGISTERED PROFESSIONAL ENGINEER
CHRISTOPHER A. RAMSEY
C 048106
EXP. 12-16
CIVIL
STATE OF CALIFORNIA

© 2015 ROMTEC, INC. ALL RIGHTS RESERVED. THESE PLANS AND DRAWINGS MAY NOT BE REPRODUCED, ADAPTED OR FURTHER DISTRIBUTED, AND NO BUILDINGS MAY BE CONSTRUCTED FROM THESE PLANS, WITHOUT THE WRITTEN PERMISSION OF ROMTEC, INC.

© 2013 ROMTEC, INC. ALL RIGHTS RESERVED. THESE PLANS AND DRAWINGS MAY NOT BE REPRODUCED, ADAPTED OR FURTHER DISTRIBUTED, NO BUILDINGS MAY BE CONSTRUCTED FROM THESE PLANS, WITHOUT THE WRITTEN PERMISSION OF ROMTEC, INC.

Precision Structural Engineering, Inc.
www.PrecisionStruc.Com
Klamath Falls Office
250 Main Klamath Falls, Oregon 97603
Phone: (541) 850-0223 Fax: (541) 850-0233
www.info@precisionstruc.com
ROMTEC 216-23

ROMTEC
18240 NORTH BANK ROAD
ROSEBURG, OR 97470
(541)-496-3541 FAX (541)-496-0803

PROJECT: 2084 - SIERRA III MULTI-USER RESTROOM W/ CONCESSION
WESTLAKE VILLAGE COMMUNITY PARK
31107 EAST THOUSAND OAKS BLVD
WESTLAKE VILLAGE, CALIFORNIA
APN 2056-001-014

SHEET TITLE: GENERAL NOTES & SHEET SCHEDULE

PLAN SET#: 18650
DATE: 12/09/2015
DRAWN BY: CR
SHEET NO. G1

CODES AND STANDARDS

2013 CALIFORNIA BUILDING CODE (CBC), TITLE 24 PART 2 (BASED ON 2012 IBC)
2013 CALIFORNIA ELECTRICAL CODE, TITLE 24 PART 3 (BASED ON 2008 NEC)
2013 CALIFORNIA MECHANICAL CODE, TITLE 24 PART 4 (BASED ON 2012 IMC)
2013 CALIFORNIA PLUMBING CODE, TITLE 24 PART 5 (BASED ON 2012 IPC)
2013 CALIFORNIA BUILDING ENERGY CODE, TITLE 24 PART 6
2013 CALIFORNIA FIRE CODE, TITLE 24 PART 9, (BASED ON 2012 IFC)
2013 CALIFORNIA GREEN BUILDING STANDARDS CODE

ACI AMERICAN CONCRETE INSTITUTE, ACI 318, "BUILDING CODE REQUIREMENTS FOR STRUCTURAL CONCRETE"

ACI AMERICAN CONCRETE INSTITUTE, ACI 530, "BUILDING CODE REQUIREMENTS FOR MASONRY STRUCTURES"

AISC AMERICAN INSTITUTE OF STEEL CONSTRUCTION
"STEEL CONSTRUCTION MANUAL, 13TH EDITION"

CODE SUMMARY:

OCCUPANCY TYPE: M
CONSTRUCTION: VB
AREA: 688 SQ FT
AREA ALLOWABLE: 9,000 SQ FT
HEIGHT: 1 STORY
HEIGHT ALLOWABLE: 1 STORY
OCCUPANT LOAD: 8
BUILDING WILL BE SPRINKLERED AND THE SPRINKLER SUBMITTAL IS DEFERRED (SPRINKLER SUPPLY & DESIGN BY OTHERS)

DESIGN LOADS

ROOF: LIVE LOAD	20 PSF
ROOF: DEAD LOAD	15 PSF
WALL DEAD LOAD	81 PSF
IBC SEISMIC DESIGN CATEGORY	D
DESIGN WIND SPEED (ULTIMATE)	110 MPH, EXPOSURE C
ALLOWABLE SOIL BEARING	1500 PSF

SEISMIC DESIGN DATA:

RISK CATEGORY: II
IMPORTANCE FACTOR: 1.0
SS: 1.500
S1: 0.600
SITE CLASS: D
SDS: 1.000
SD1: 0.600
SEISMIC DESIGN CATEGORY: D
R = 5
BASE SHEAR: V = 0.200 W

WIND DESIGN :

RISK CATERGORY: II
WIND SPEED = 110 MPH
EXPOSURE C
INTERNAL PRESSURE COEFE = ± 0.18

BEARING WALL SYSTEM: SPECIAL REINFORCED MASONRY SHEAR WALL

ANALYSIS METHOD: EQUIVALENT STATIC FORCE METHOD

SPECIAL INSPECTIONS

CONCRETE SPECIAL INSPECTION NOT REQUIRED PER IBC 1704.4
EXCEPTION 2.3 [FOOTINGS]
EXCEPTION 3 [SLAB]

SPECIAL INSPECTIONS, CONT'D

MASONRY CONSTRUCTION: LEVEL B QUALITY ASSURANCE (PER TABLE 1.19.2 IN TMS402/11)

INSPECTION TASK	FREQUENCY OF INSPECTION		REFERENCE CRITERIA		INSPECTION LOCATION	
	CONTINUOUS	PERIODIC	TMS 402 / ACI 530 / ASCE5	TMS 602 / ACI 530.1 / ASCE6	INHOUSE	FIELD
1. VERIFY COMPLIANCE WITH THE APPROVED SUBMITTALS	-	X	-	ART. 1.5	-	X
2. AS MASONRY CONSTRUCTION BEGINS, VERIFY THAT THE FOLLOWING ARE IN COMPLIANCE:						
A. PROPORTION OF SITE-PREPARED MORTAR	-	X	-	ART. 2.1, 2.6A	-	X
B. CONSTRUCTION OF MORTAR JOINTS	-	X	-	ART. 3.3 B	-	X
D. LOCATION OF REINFORCEMENT, CONNECTORS, AND PRESTRESSING TENDONS AND ANCHORAGES	-	X	-	ART. 3.4/ 3.6A	-	X
3. PRIOR TO GROUTING, VERIFY THAT THE FOLLOWING ARE IN COMPLIANCE:						
A. GROUT SPACE	-	X	-	ART. 3.2D, 3.2 F	-	X
B. GRADE, TYPE, AND SIZE OF REINFORCEMENT AND ANCHOR BOLTS, AND PRESTRESSING TENDONS AND ANCHORAGES	-	X	SEC. 1.16	ART. 2.4, 3.4	-	X
C. PLACEMENT OF REINFORCEMENT, CONNECTORS AND PRESTRESSING TENDONS AND ANCHORAGES	-	X	SEC. 1.16	ART. 3.2E, 3.4, 3.6A	-	X
D. PROPORTIONS OF SITE-PREPARED GROUT AND PRESTRESSING GROUT FOR BONDED TENDONS	-	X	-	ART. 2.6B, 2.4G.1.b	-	X
E. CONSTRUCTION OF MORTAR JOINTS	-	X	-	ART. 3.3B	-	X
4. VERIFY DURING CONSTRUCTION:						
A. SIZE AND LOCATION OF STRUCTURAL ELEMENTS	-	X		ART. 3.3F	-	X
B. TYPE, SIZE AND LOCATION OF ANCHORS, INCLUDING OTHER DETAILS OF ANCHORAGE OF MASONRY TO STRUCTURAL MEMBERS, FRAMES OR OTHER CONSTRUCTION.	-	X	SEC. 1.16.4.3, 1.17.1	-	-	X
D. PREPARATION, CONSTRUCTION, AND PROTECTION OF MASONRY DURING COLD WEATHER (TEMPERATURE BELOW 40°F(4.4°C)) OR HOT WEATHER (TEMPERATURE ABOVE 90°F(32.2°C))	-	X	-	ART. 1.8C, 1.8D	-	X
5. OBSERVE PREPARATION OF GROUT SPECIMENS, MORTAR SPECIMENS, AND/OR PRISMS	-	X	-	ART. 1.4B.2.a.3, 1.4B.2.b.3, 1.4B.2.c.3, 1.4B.3,1.4B.4	-	X

STEEL CONSTRUCTION (PER TABLE 1705.2.2 IN 2013 CBC)

VERIFICATION AND INSPECTION	FREQUENCY OF INSPECTION		REFERENCE CRITERIA		INSPECTION LOCATION	
	CONTINUOUS	PERIODIC	REFERENCED STANDARD	CBC REFERENCE	INHOUSE	FIELD
IDENTIFICATION MARKINGS TO CONFORM TO ASTM STANDARDS SPECIFIED IN THE APPROVED CONSTRUCTION DOCUMENTS	-	X	AISC 360 SECTION A3.3	-	X	-
MANUFACTURER'S CERTIFIED MILL TEST REPORTS	-	X	-	-	X	-

REV	DATE	BY	DESCRIPTION
4	3/28/16	JS	ENGINEER REDLINES

3-28-16
REGISTERED PROFESSIONAL ENGINEER
C048106
EXP. 12-16
CIVIL
STATE OF CALIFORNIA

© 2015 ROMTEC, INC. ALL RIGHTS RESERVED. THESE PLANS AND DRAWINGS MAY NOT BE REPRODUCED, ADAPTED OR FURTHER DISTRIBUTED, AND NO BUILDINGS MAY BE CONSTRUCTED FROM THESE PLANS, WITHOUT THE WRITTEN PERMISSION OF ROMTEC, INC.

ROMTEC
18200 NORTH BANK ROAD
ROSEBURG, OR 97470
(541)-496-3541 FAX (541)-496-0803

Precision Structural Engineering, Inc.
www.info@structural1.com
Klamath Falls, Oregon 97603
250 Main Klamath Falls, Oregon 97603
Phone: (541) 850-5300 Fax: (541) 850-6233
www.info@structural1.com
ROMTEC 216-23

© 2015 ROMTEC, INC. ALL RIGHTS RESERVED. THESE PLANS AND DRAWINGS MAY NOT BE REPRODUCED, ADAPTED OR FURTHER DISTRIBUTED, AND NO BUILDINGS MAY BE CONSTRUCTED FROM THESE PLANS, WITHOUT THE WRITTEN PERMISSION OF ROMTEC, INC.

PROJECT: 2084 - SIERRA II MULTI-USER RESTROOM IV CONCESSION
WESTLAKE VILLAGE COMMUNITY PARK
31107 EAST THOUSAND OAKS BLVD
WESTLAKE VILLAGE, CALIFORNIA
APN 2056-001-014

SHEET TITLE:
DESIGN CRITERIA & CODE SUMMARY

PLAN SET# 18650
DATE: 12/09/2015
DRAWN BY: CR
SHEET NO. G2

NOTE: ALL WOOD TO BE SEALED WITH CONTRACTOR SUPPLIED CLEAR COAT FINISH APPLIED ONSITE BY CONTRACTOR

WALL TYPE SCHEDULE

8" MORTAR JOINT CMU WALL REINFORCED & GROUT FILLED

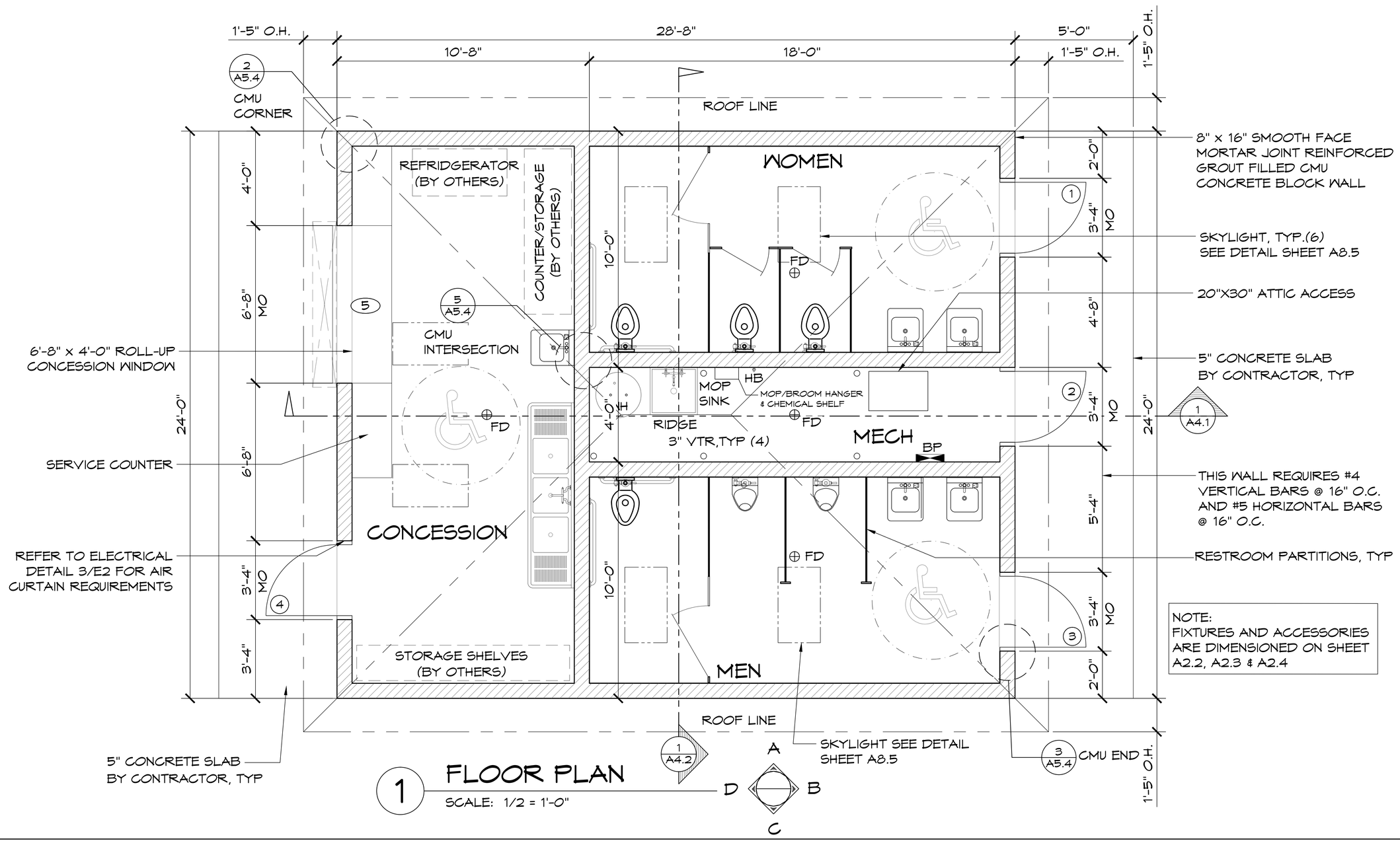

1 FLOOR PLAN

SCALE: 1/2 = 1'-0"

REV	DATE	BY	DESCRIPTION
4	3/28/16	JS	ENGINEER REVISIONS

3-28-16

REGISTERED PROFESSIONAL ENGINEER — CIVIL — STATE OF CALIFORNIA — EXP. 12-16

© 2015 ROMTEC, INC. ALL RIGHTS RESERVED. THESE PLANS AND DRAWINGS MAY NOT BE REPRODUCED, ADAPTED OR FURTHER DISTRIBUTED, AND NO BUILDINGS MAY BE CONSTRUCTED FROM THESE PLANS, WITHOUT THE WRITTEN PERMISSION OF ROMTEC, INC.

Precision Structural Engineering, Inc.
www.info@structu1.com
Klamath Falls Office
250 Main Street, Klamath Falls, Oregon 97603
Phone: (541) 850-6300 Fax: (541) 850-6233
www.info@structure1.com
ROMTEC 216-23

ROMTEC
16240 NORTH BANK ROAD
ROSEBURG, OR 97470
(541)-496-3541 FAX (541)-496-0803

© 2015 ROMTEC, INC. ALL RIGHTS RESERVED. THESE PLANS AND DRAWINGS MAY NOT BE REPRODUCED, ADAPTED OR FURTHER DISTRIBUTED, AND NO BUILDINGS MAY BE CONSTRUCTED FROM THESE PLANS, WITHOUT THE WRITTEN PERMISSION OF ROMTEC, INC.

PROJECT: 2084 - SIERRA III MULTI-USER RESTROOM W/ CONCESSION
WESTLAKE VILLAGE COMMUNITY PARK
31107 EAST THOUSAND OAKS BLVD
WESTLAKE VILLAGE, CALIFORNIA
APN 2056-001-014

SHEET TITLE: FLOOR PLAN

PLAN SET# 18650

DATE: 12/09/2015

DRAWN BY: CR

SHEET NO. A2.1

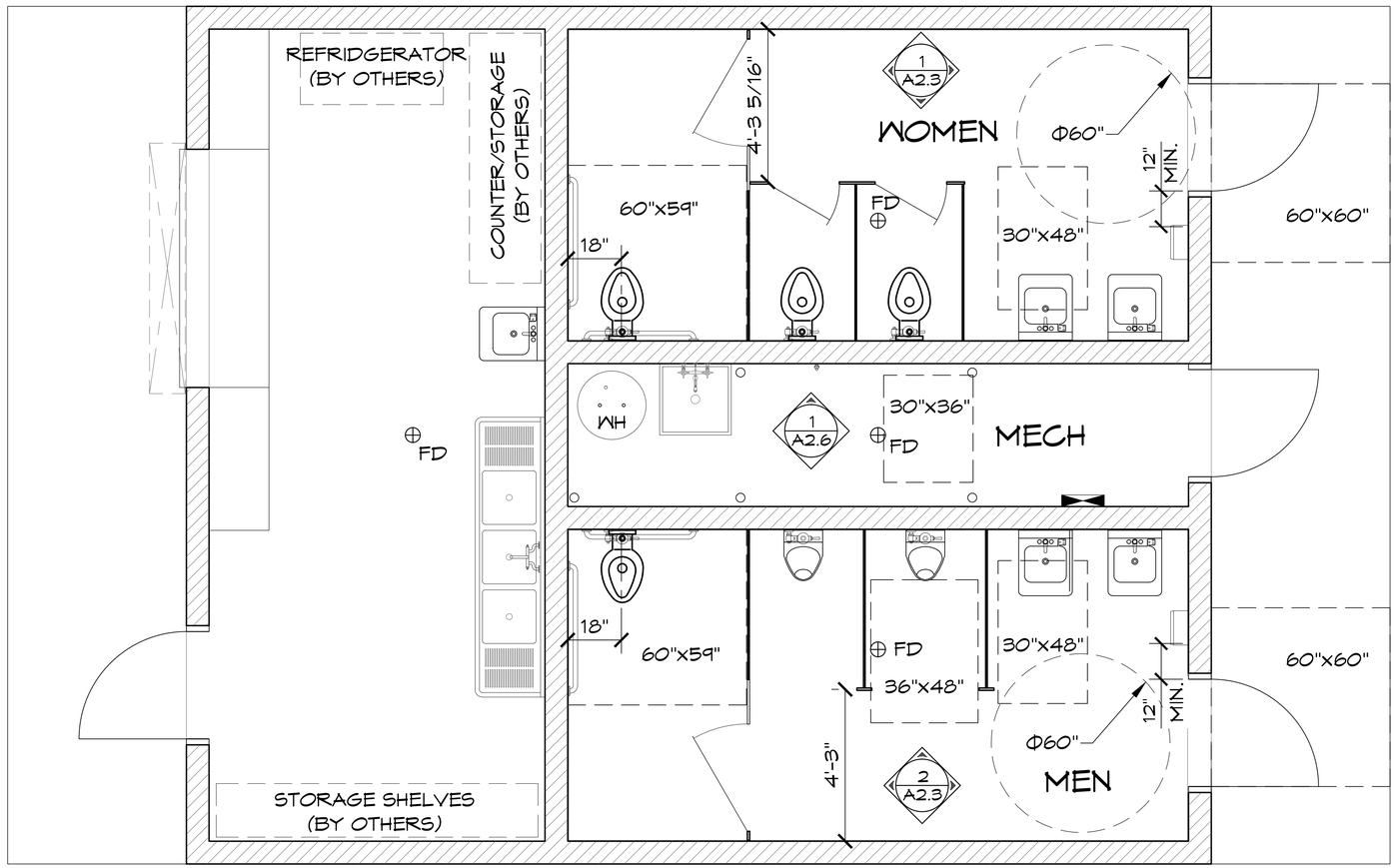

1 ADA FIXTURE CLEAR FLOOR AREA

SCALE: 1/2" = 1'-0"

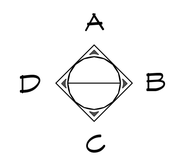

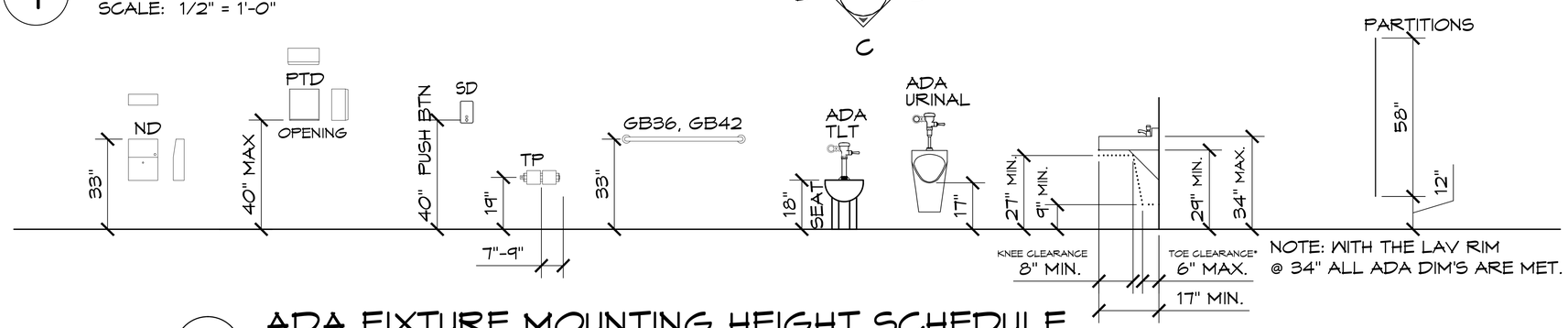

NOTE: WITH THE LAV RIM @ 34" ALL ADA DIM'S ARE MET.

2 ADA FIXTURE MOUNTING HEIGHT SCHEDULE

SCALE: 1/2" = 1'-0"

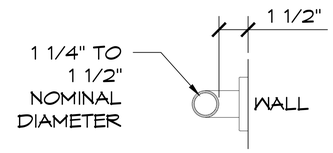

PER CBC 2013 1115B.7.2 GRAB BARS MUST MEET 250# MINIMUM LOAD. GRAB BARS SHALL NOT ROTATE WITHIN THEIR FITTINGS.

3 GRAB BAR SECTION

SCALE: 1 1/2"=12"

REV	DATE	BY	DESCRIPTION
4	3/28/16	JS	ENGINEER REDLINES

3-28-16

REGISTERED PROFESSIONAL ENGINEER
STATE OF CALIFORNIA
CIVIL
EXP. 12-16

© 2015 ROMTEC, INC. ALL RIGHTS RESERVED. THESE PLANS AND DRAWINGS MAY NOT BE REPRODUCED, ADAPTED OR FURTHER DISTRIBUTED, AND NO BUILDINGS MAY BE CONSTRUCTED FROM THESE PLANS, WITHOUT THE WRITTEN PERMISSION OF ROMTEC, INC.

Precision Structural Engineering, Inc.
www.info@structure1.com
Kevin Phillips, President
250 Main Klamath Falls, Oregon 97603
Phone: (541) 850-5300 Fax: (541) 850-5233
www.info@structure1.com
ROMTEC 216123

ROMTEC
18240 NORTH BANK ROAD
ROSEBURG, OR 97470
(541)-496-3541 FAX (541)-496-0803

© 2015 ROMTEC, INC. ALL RIGHTS RESERVED. THESE PLANS AND DRAWINGS MAY NOT BE REPRODUCED, ADAPTED OR FURTHER DISTRIBUTED, AND NO BUILDINGS MAY BE CONSTRUCTED FROM THESE PLANS, WITHOUT THE WRITTEN PERMISSION OF ROMTEC, INC.

PROJECT: 2084 - SIERRA III MULTI-USER RESTROOM W/ CONCESSION
WESTLAKE VILLAGE COMMUNITY PARK
31107 EAST THOUSAND OAKS BLVD
WESTLAKE VILLAGE, CALIFORNIA
APN 2056-001-014

SHEET TITLE:
ADA CLEARANCES

PLAN SET# 18650
DATE: 12/09/2015
DRAWN BY: CR
SHEET NO. A2.2

ALL RESTROOM PARTITION DOORS SHALL BE EQUIPPED WITH SELF CLOSING DEVICE. A LOOP OR U-SHAPED HANDLE WILL BE PROVIDED ON THE INSIDE AND OUTSIDE OF THE ADA STALL DOOR WITH HARDWARE NOT REQUIRING GRASPING OR TWISTING.

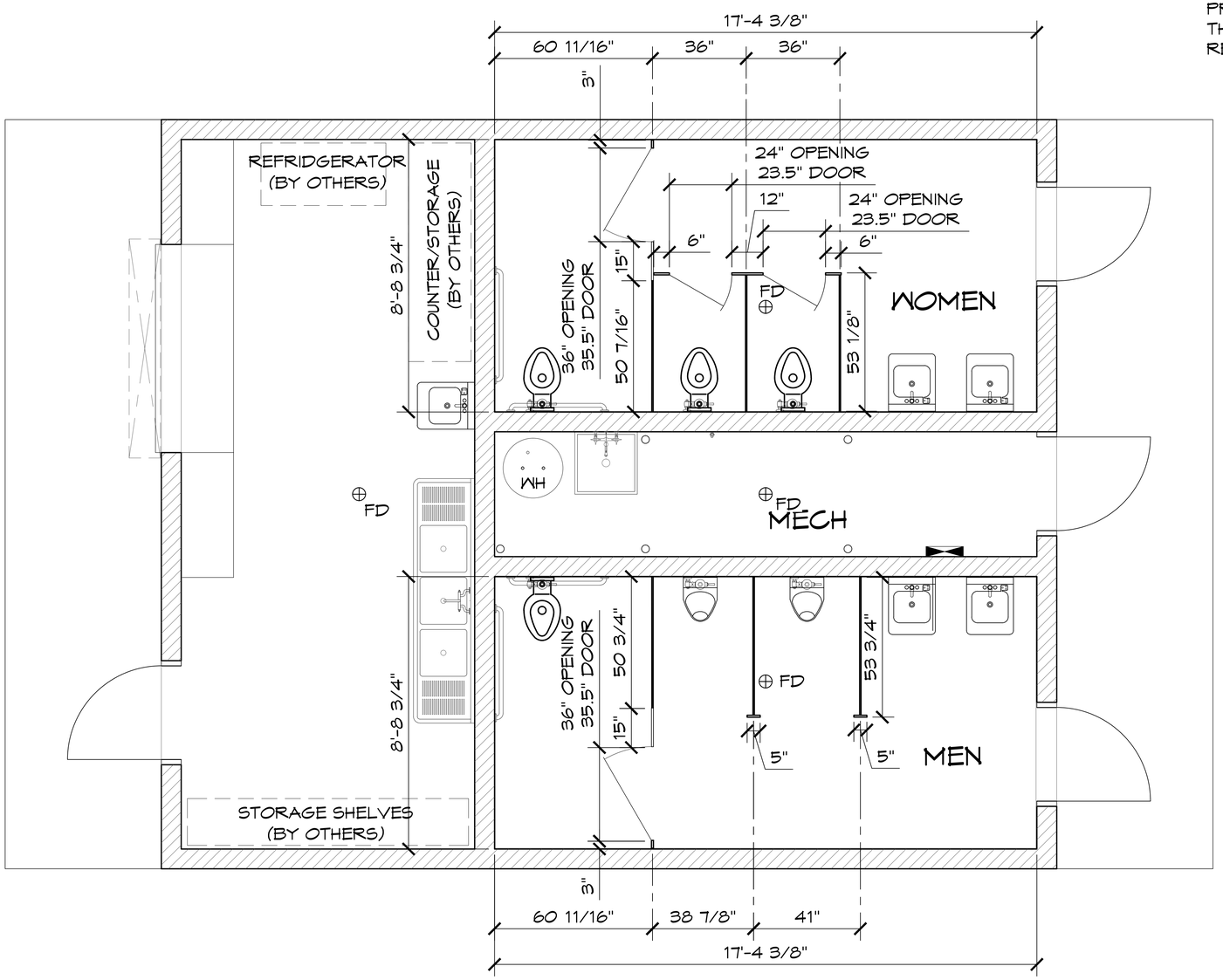

1 PARTITION PLAN

SCALE: 1/2" = 1'-0"

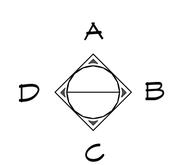

REV.	DATE	BY	DESCRIPTION
4	3/28/16	JS	ENGINEER REDLINES

3-28-16

REGISTERED PROFESSIONAL ENGINEER
CHRIS ROSS
EXP. 12-16
CIVIL
STATE OF CALIFORNIA

© 2015 ROMTEC, INC. ALL RIGHTS RESERVED. THESE PLANS AND DRAWINGS MAY NOT BE REPRODUCED, ADAPTED OR FURTHER DISTRIBUTED, AND NO BUILDINGS MAY BE CONSTRUCTED FROM THESE PLANS, WITHOUT THE WRITTEN PERMISSION OF ROMTEC, INC.

ROMTEC
18260 NORTH BANK ROAD
ROSEBURG, OR 97470
(541)-496-3541 FAX (541)-496-0803

Precision Structural Engineering, Inc.
www.info@structure1.com
Klamath Falls, Oregon
250 Main Klamath Falls, Oregon 97603
Phone: (541) 850-6300 Fax: (541) 850-6233
www.info@structure1.com
ROMTEC 216-23

PROJECT: 2084 - SIERRA III MULTI-USER RESTROOM W/ CONCESSION
WESTLAKE VILLAGE COMMUNITY PARK
31107 EAST THOUSAND OAKS BLVD
WESTLAKE VILLAGE, CALIFORNIA
APN 2056-001-014

SHEET TITLE:
PARTITION PLAN

PLAN SET# 18650

DATE: 12/09/2015

DRAWN BY: CR

SHEET NO. A2.3

FINISH SCHEDULE						
NO.		DOORS	WALLS	FLOORS	COVE BASE	CEILINGS
1	CONCESSION AREA	POWDER COAT	FRP ON ALL WALLS (REFER TO DETAIL 1/A9.2)	SEALED CONCRETE	SLIM FOOT TOPSET S3619T	5/8" GREEN BOARD DRYWALL W/ EPOXY PAINT (INSTALLER SUPPLY)
2	MECH ROOM	POWDER COAT	EPOXY PAINT-ALL WALLS WITH 48" x 96" FRP PANEL-BEHIND MOP SINK.	SEALED CONCRETE	SLIM FOOT TOPSET S3619T	1/2" ROUGH TEX PLYWOOD (INSTALLER SUPPLY)
3	MEN'S RESTROOM	POWDER COAT	6X6 TILE UP TO 6'-3" & EPOXY PAINT ABOVE	SEALED CONCRETE	6" TILE COVE BASE	5/8" GREEN BOARD DRYWALL W/ EPOXY PAINT (INSTALLER SUPPLY)
4	WOMEN'S RESTROOM	POWDER COAT	6X6 TILE UP TO 6'-3" & EPOXY PAINT ABOVE	SEALED CONCRETE	6" TILE COVE BASE	5/8" GREEN BOARD DRYWALL W/ EPOXY PAINT (INSTALLER SUPPLY)
	ROOF SOFFITT & FASCIA					1/2" ROUGH TEX PLYWOOD FINISHED W/PAINT (INSTALLER SUPPLY)

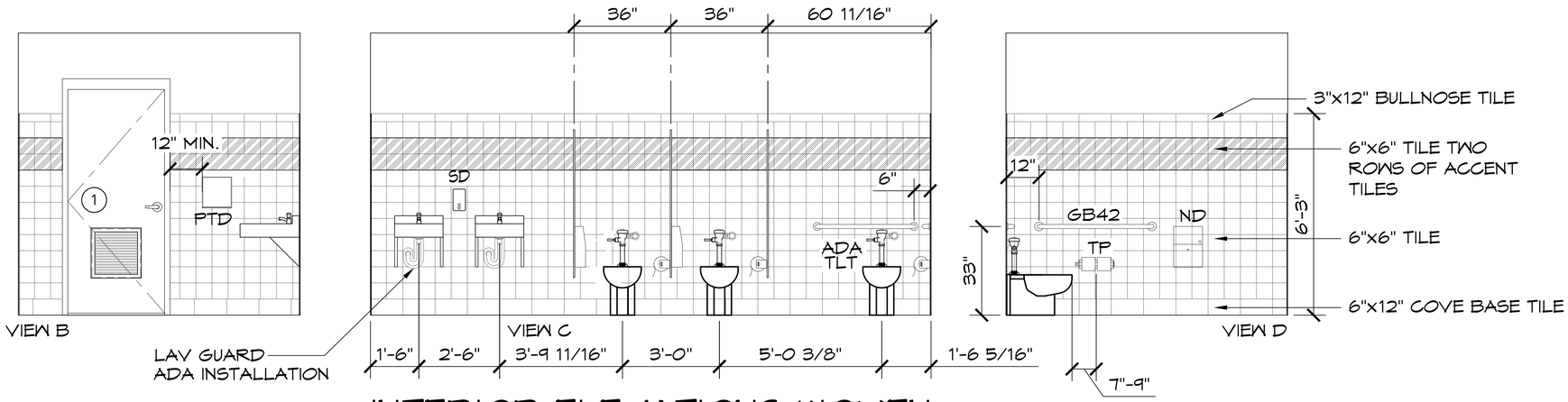

1 INTERIOR ELEVATIONS WOMEN

SCALE: 1/2" = 1'-0"

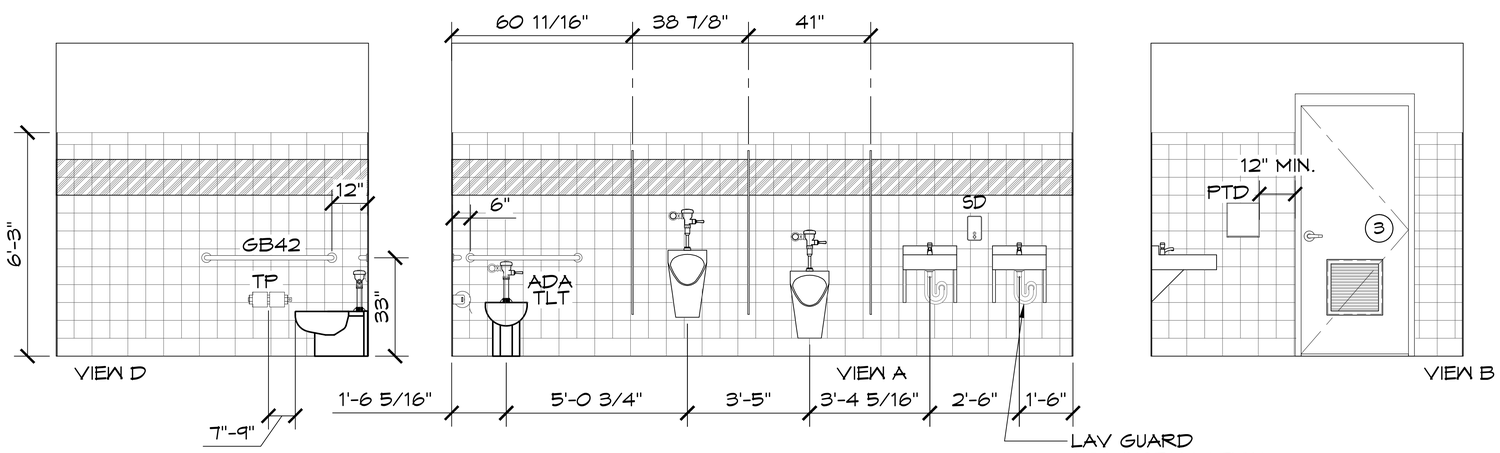

2 INTERIOR ELEVATIONS MEN

SCALE: 1/2" = 1'-0"

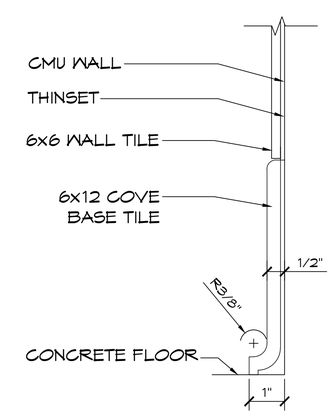

3 COVE TILE DETAIL

SCALE: 6" = 1'-0"

REV.	DATE	BY	DESCRIPTION
1-2	3/8/2016	JBR	BUILDING REVIEW COMMENTS-REDLINES
3	3/17/2016	CR	BUILDING REVIEW COMMENTS

3-28-16

REGISTERED PROFESSIONAL ENGINEER
CHRIS RUSSELL
No. C 058803
EXP. 12-16
CIVIL
STATE OF CALIFORNIA

© 2015 ROMTEC, INC. ALL RIGHTS RESERVED. THESE PLANS AND DRAWINGS MAY NOT BE REPRODUCED, ADAPTED OR FURTHER DISTRIBUTED, AND NO BUILDINGS MAY BE CONSTRUCTED FROM THESE PLANS, WITHOUT THE WRITTEN PERMISSION OF ROMTEC, INC.

Precision Structural Engineering, Inc.
www.info@structure1.com
Klamath Falls, Oregon Office
250 Main Klamath Falls, Oregon 97603
Phone: (541) 850-6300 Fax: (541) 850-6233
www.info@structure1.com
ROMTEC 216-23

ROMTEC
18240 NORTH BANK ROAD
ROSEBURG, OR 97470
(541)-496-3541 FAX (541)-496-0803

© 2013 ROMTEC, INC. ALL RIGHTS RESERVED. THESE PLANS AND DRAWINGS MAY NOT BE REPRODUCED, ADAPTED OR FURTHER DISTRIBUTED, AND NO BUILDINGS MAY BE CONSTRUCTED FROM THESE PLANS, WITHOUT THE WRITTEN PERMISSION OF ROMTEC, INC.

PROJECT: 2084 - SIERRA II MULTI-USER RESTROOM W/ CONCESSION
WESTLAKE VILLAGE COMMUNITY PARK
31107 EAST THOUSAND OAKS BLVD
WESTLAKE VILLAGE, CALIFORNIA
APN 2056-001-014

SHEET TITLE:
INTERIOR ELEVATIONS

PLAN SET# 18650

DATE: 12/09/2015

DRAWN BY: CR

SHEET NO. A2.4

FINISH SCHEDULE						
NO.		DOORS	WALLS	FLOORS	COVE BASE	CEILINGS
1	CONCESSION AREA	POWDER COAT	FRP ON ALL WALLS (REFER TO DETAIL 1/A9.2)	SEALED CONCRETE	SLIM FOOT TOPSET S3619T	5/8" GREEN BOARD DRYWALL W/ EPOXY PAINT (INSTALLER SUPPLY)
2	MECH ROOM	POWDER COAT	EPOXY PAINT-ALL WALLS WITH 48" x 96" FRP PANEL-BEHIND MOP SINK.	SEALED CONCRETE	SLIM FOOT TOPSET S3619T	1/2" ROUGH TEX PLYWOOD (INSTALLER SUPPLY)
3	MEN'S RESTROOM	POWDER COAT	6X6 TILE UP TO 6'-3" & EPOXY PAINT ABOVE	SEALED CONCRETE	6" TILE COVE BASE	5/8" GREEN BOARD DRYWALL W/ EPOXY PAINT (INSTALLER SUPPLY)
4	WOMEN'S RESTROOM	POWDER COAT	6X6 TILE UP TO 6'-3" & EPOXY PAINT ABOVE	SEALED CONCRETE	6" TILE COVE BASE	5/8" GREEN BOARD DRYWALL W/ EPOXY PAINT (INSTALLER SUPPLY)
	ROOF SOFFITT & FASCIA					1/2" ROUGH TEX PLYWOOD FINISHED W/PAINT (INSTALLER SUPPLY)

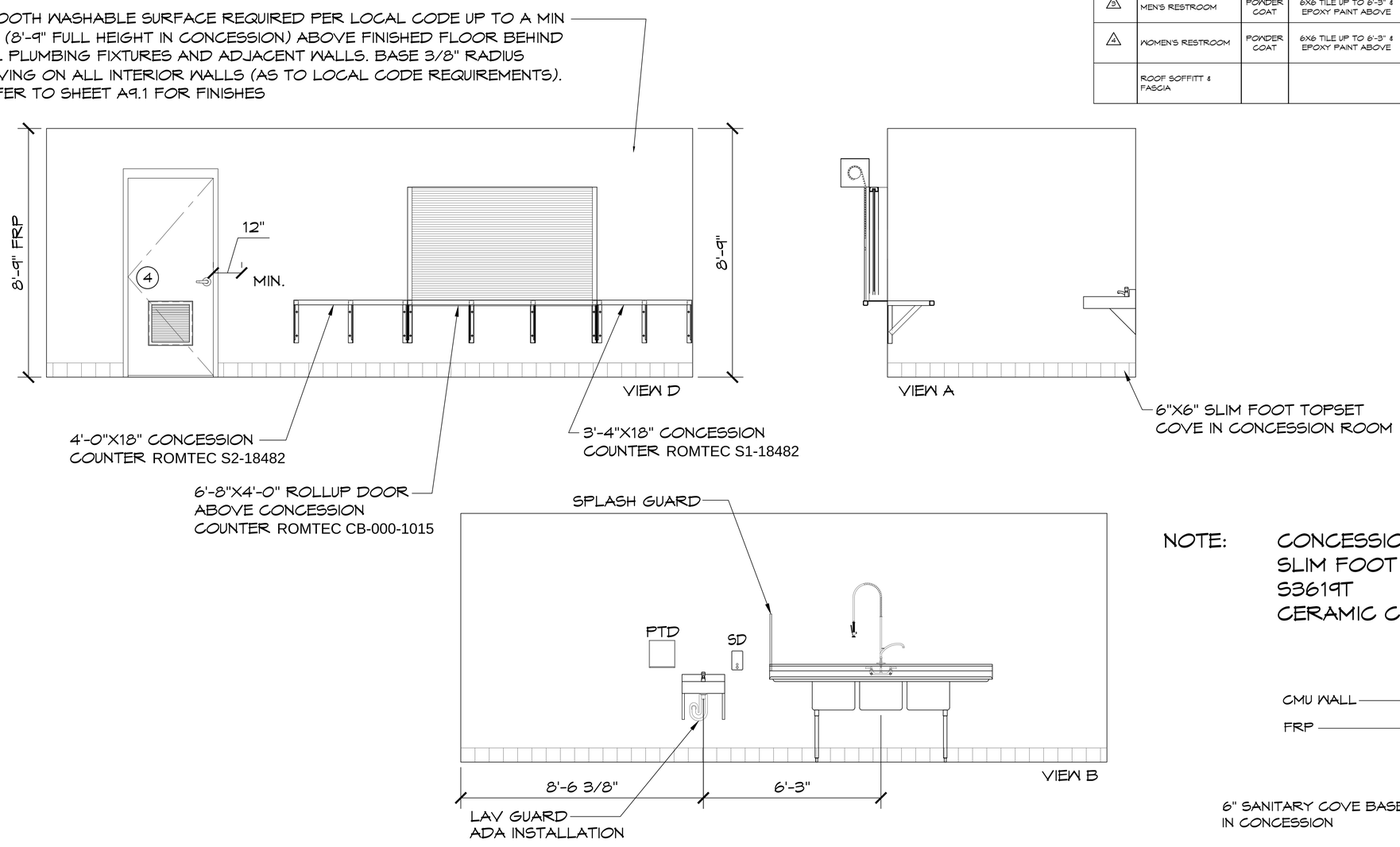

1 INTERIOR ELEVATIONS CONCESSION

SCALE: 1/2" = 1'-0"

NOTE: CONCESSION & MECH
SLIM FOOT TOP SET
S3619T
CERAMIC COVE BASE

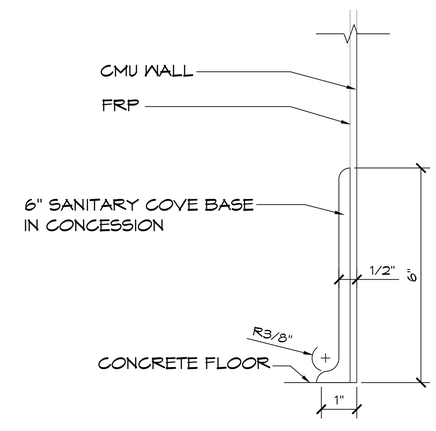

2 SANITARTY COVE TILE DETAIL

SCALE: 6" = 1'-0"

REV	DATE	BY	DESCRIPTION
4	01-28-2016	TA	ENGINEER REDLINES
3	3/17/2016	CR	BUILDING REVIEW COMMENTS

3-28-16

REGISTERED PROFESSIONAL ENGINEER CHRISTOPHER A. RAHN No. 74831 EXP. 12-16 CIVIL STATE OF CALIFORNIA

© 2015 ROMTEC, INC. ALL RIGHTS RESERVED. THESE PLANS AND DRAWINGS MAY NOT BE REPRODUCED, DISTRIBUTED, AND NO BUILDINGS MAY BE CONSTRUCTED FROM THESE PLANS, WITHOUT THE WRITTEN PERMISSION OF ROMTEC, INC.

Precision Structural Engineering, Inc.
Klamath Falls Office
260 Main Street, Klamath Falls, Oregon 97603
www.info@structure1.com
Phone: (541) 850-6300 Fax: (541) 850-6233
ROMTEC 216-23

ROMTEC
18240 NORTH BANK ROAD
ROSEBURG, OR 97470
(541)-496-3541 FAX (541)-496-0803

PROJECT: 2084 - SIERRA III MULTI-USER RESTROOM W/ CONCESSION
WESTLAKE VILLAGE COMMUNITY PARK
31107 EAST THOUSAND OAKS BLVD
WESTLAKE VILLAGE, CALIFORNIA
APN 2056-001-014

SHEET TITLE: INTERIOR ELEVATIONS

PLAN SET# 18650

DATE: 12/09/2015

DRAWN BY: CR

SHEET NO. A2.5

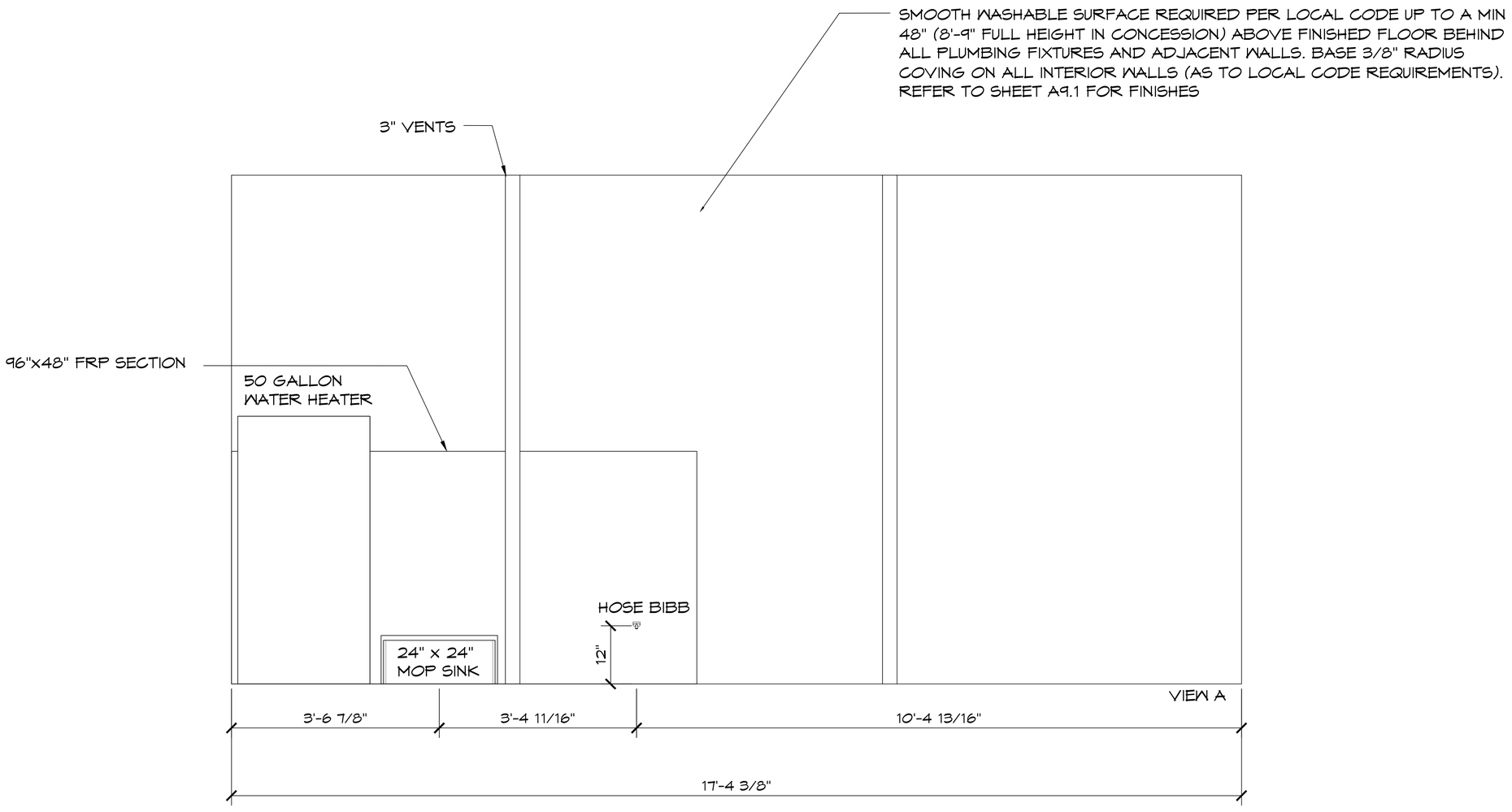

1 INTERIOR ELEVATION MECHANICAL ROOM

SCALE: 1" = 1'-0"

© 2015 ROMTEC, INC. ALL RIGHTS RESERVED. THESE PLANS AND DRAWINGS MAY NOT BE REPRODUCED, ADAPTED OR FURTHER DISTRIBUTED, AND NO BUILDINGS MAY BE CONSTRUCTED FROM THESE PLANS, WITHOUT THE WRITTEN PERMISSION OF ROMTEC, INC.

REV	DATE	BY	DESCRIPTION
1	01-~~22~~-15/16	TS	ENGINEER REDLINES

3-28-16

REGISTERED PROFESSIONAL ENGINEER
C-18803
EXP. 12-16
CIVIL
STATE OF CALIFORNIA

Precision Structural Engineering, Inc.
www.structural1.com
Klamath Falls Office
250 Main Klamath Falls, Oregon 97603
Phone: (541) 850-0505 Fax: (541) 850-0233
www.info@structural1.com
ROMTEC 216-23

ROMTEC
18240 NORTH BANK ROAD
ROSEBURG, OR 97470
(541)-496-3541 FAX (541)-496-0803

© 2019 ROMTEC, INC. ALL RIGHTS RESERVED. THESE PLANS AND DRAWINGS MAY NOT BE REPRODUCED, ADAPTED OR FURTHER DISTRIBUTED, AND NO BUILDINGS MAY BE CONSTRUCTED FROM THESE PLANS, WITHOUT THE WRITTEN PERMISSION OF ROMTEC, INC.

PROJECT: 2084 - SIERRA III MULTI-USER RESTROOM W/ CONCESSION
WESTLAKE VILLAGE COMMUNITY PARK
31107 EAST THOUSAND OAKS BLVD
WESTLAKE VILLAGE, CALIFORNIA
APN 2056-001-014

SHEET TITLE:
INTERIOR ELEVATIONS

PLAN SET#: 18650

DATE: 12/09/2015

DRAWN BY: CR

SHEET NO. A2.6

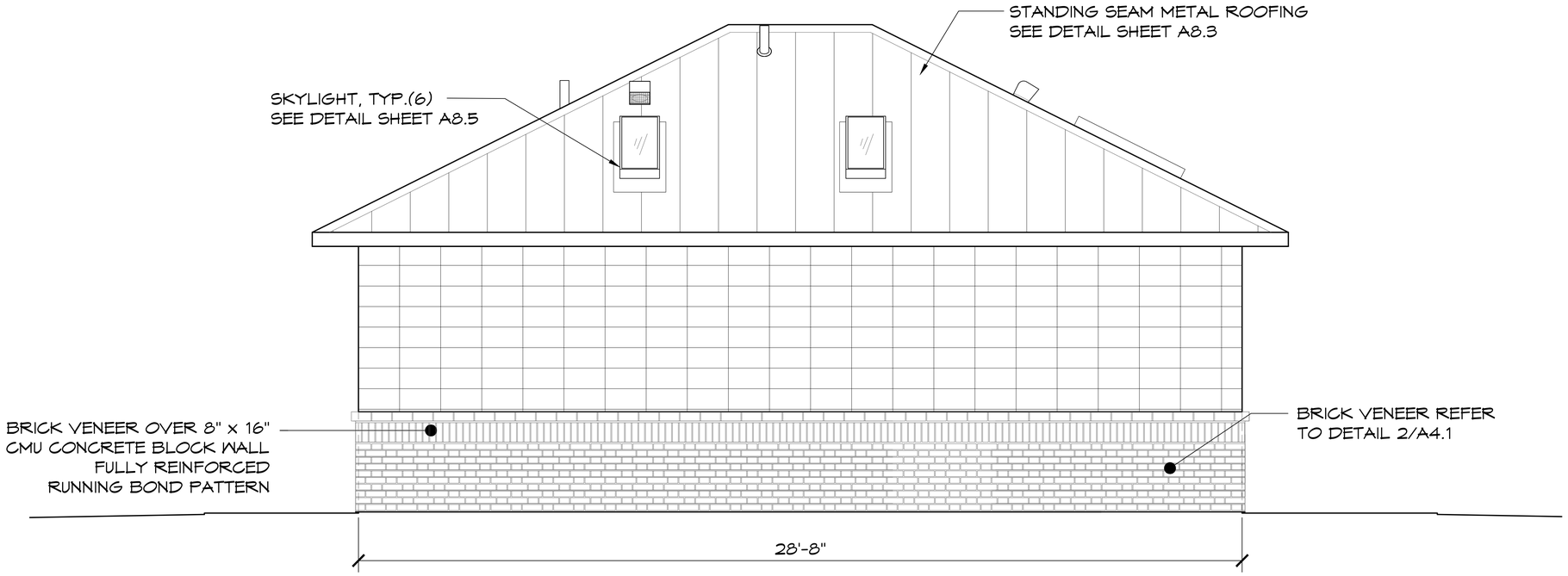

A ELEVATION VIEW

SCALE: 1/2" = 1'-0"

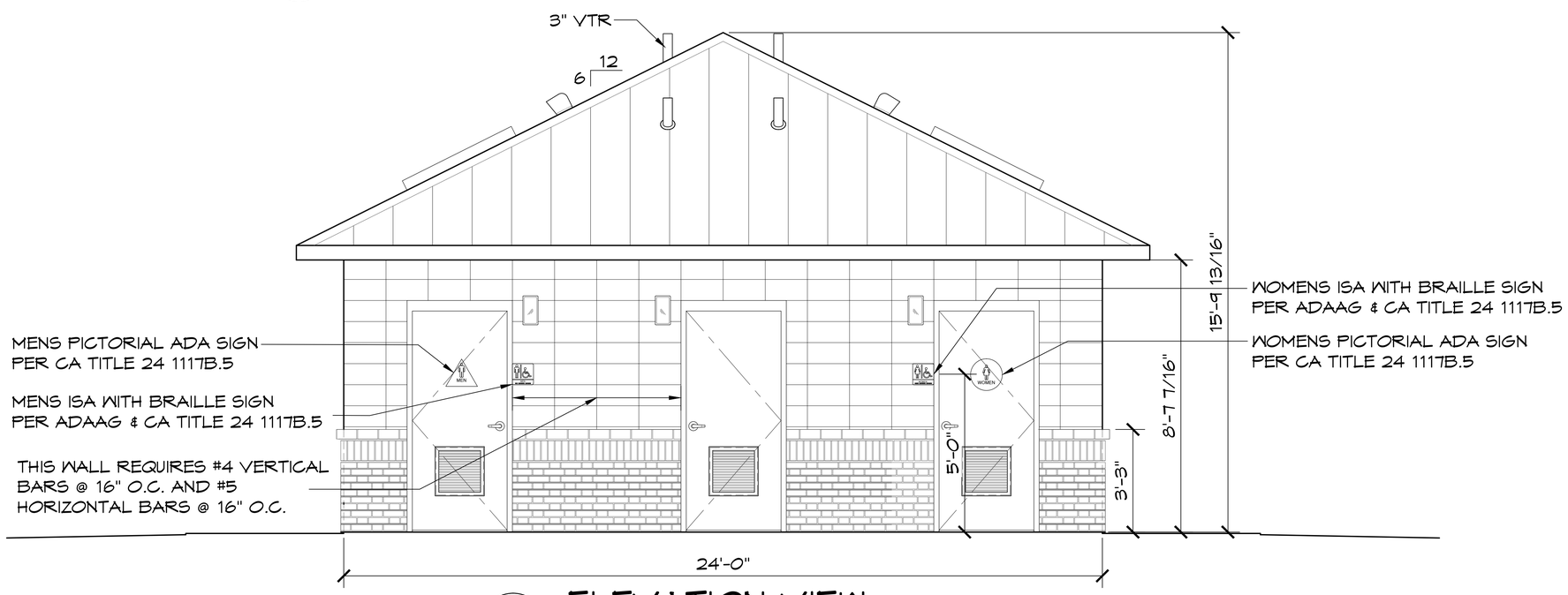

B ELEVATION VIEW

SCALE: 1/2" = 1'-0"

© 2015 ROMTEC, INC. ALL RIGHTS RESERVED. THESE PLANS AND DRAWINGS MAY NOT BE REPRODUCED, ADAPTED OR FURTHER DISTRIBUTED, AND NO BUILDINGS MAY BE CONSTRUCTED FROM THESE PLANS, WITHOUT THE WRITTEN PERMISSION OF ROMTEC, INC.

REV.	DATE	BY	DESCRIPTION
4	3-28-16	JS	ENGINEER REDLINES

3-28-16

REGISTERED PROFESSIONAL ENGINEER
CIVIL
STATE OF CALIFORNIA
EXP. 12-16

Precision Structural Engineering, Inc.
www.info@structure1.com
Klamath Falls, Oregon
250 Main Klamath Falls, Oregon 97603
Phone: (541) 850-6300 Fax: (541) 850-6233
www.info@structure1.com
ROMTEC 2/6/23

ROMTEC
18240 NORTH BANK ROAD
ROSEBURG, OR 97470
(541)-496-3541 FAX (541)-496-0803

PROJECT: 2084 - SIERRA II MULTI-USER RESTROOM W/ CONCESSION
WESTLAKE VILLAGE COMMUNITY PARK
31107 EAST THOUSAND OAKS BLVD
WESTLAKE VILLAGE, CALIFORNIA
APN 2056-001-014

SHEET TITLE:
EXTERIOR ELEVATIONS

PLAN SET# 18650

DATE: 12/09/2015

DRAWN BY: CR

SHEET NO. A3.1

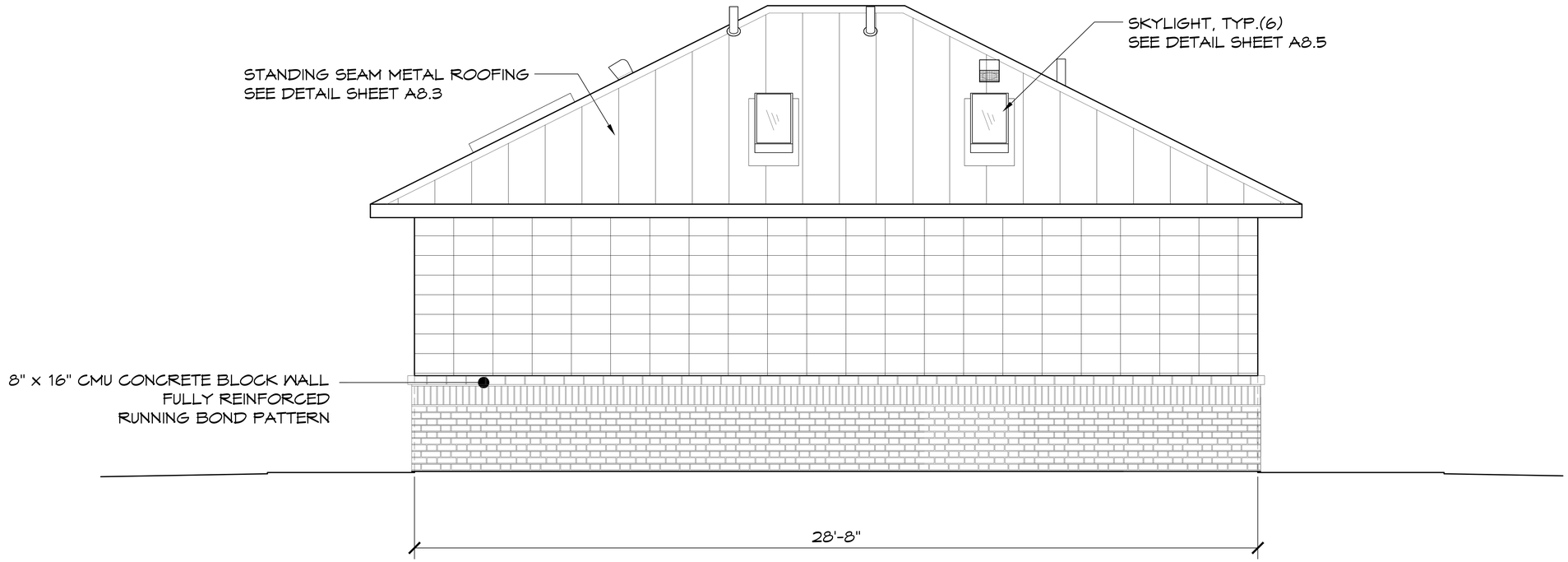

C ELEVATION VIEW

SCALE: 1/2" = 1'-0"

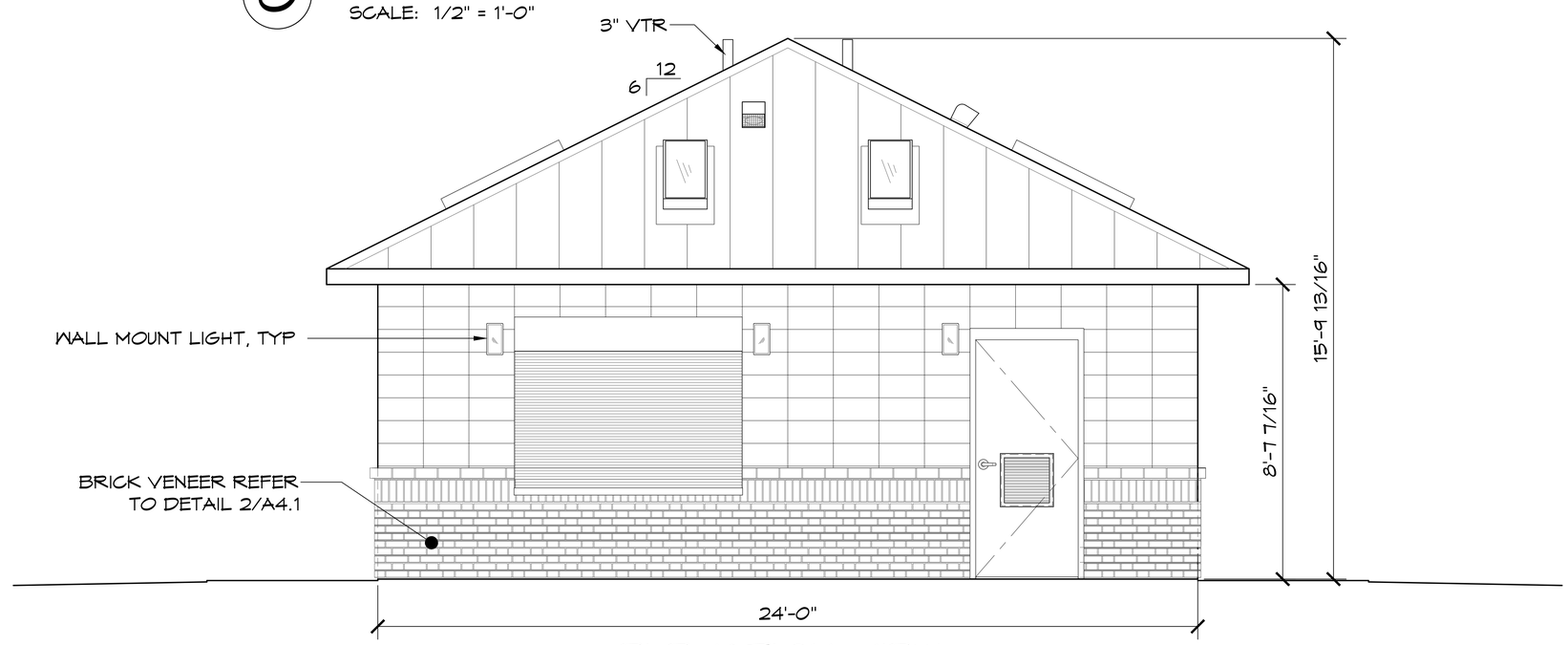

D ELEVATION VIEW

SCALE: 1/2" = 1'-0"

© 2015 ROMTEC, INC. ALL RIGHTS RESERVED. THESE PLANS AND DRAWINGS MAY NOT BE REPRODUCED, ADAPTED OR FURTHER DISTRIBUTED, AND NO BUILDINGS MAY BE CONSTRUCTED FROM THESE PLANS, WITHOUT THE WRITTEN PERMISSION OF ROMTEC, INC.

REV	DATE	BY	DESCRIPTION
4	3/28/16	JS	ENGINEER REDLINES

3-28-16

REGISTERED PROFESSIONAL ENGINEER
JAMIE SHEPHERD
C-38803
EXP. 12-16
CIVIL
STATE OF CALIFORNIA

Precision Structural Engineering, Inc.
www.info@structure1.com
Klamath Falls, Oregon 97603
250 Main Klamath Falls, Oregon 97603
Phone: (541) 850-8300 Fax: (541) 850-8233
www.info@structure1.com
ROMTEC 216-23

ROMTEC
18240 NORTH BANK ROAD
ROSEBURG, OR 97470
(541)-496-3541 FAX (541)-496-0803

© 2013 ROMTEC, INC. ALL RIGHTS RESERVED. THESE PLANS AND DRAWINGS MAY NOT BE REPRODUCED, ADAPTED OR FURTHER DISTRIBUTED, NO BUILDINGS MAY BE CONSTRUCTED FROM THESE PLANS, WITHOUT THE WRITTEN PERMISSION OF ROMTEC, INC.

PROJECT: 2084 - SIERRA III MULTI-USER RESTROOM W/ CONCESSION
WESTLAKE VILLAGE COMMUNITY PARK
31107 EAST THOUSAND OAKS BLVD
WESTLAKE VILLAGE, CALIFORNIA
APN 2056-001-014

SHEET TITLE:
EXTERIOR ELEVATIONS

PLAN SET# 18650

DATE: 12/09/2015

DRAWN BY: CR

SHEET NO. A3.2

CONTRACTOR TO DESIGN A FIRE SPRINKLER SYSTEM FOR APPROVAL BY THE COUNTY OF LOS ANGELES SPRINKLER PLAN UNIT FOR REVIEW AND APPROVAL PRIOR TO INSTALLATION.

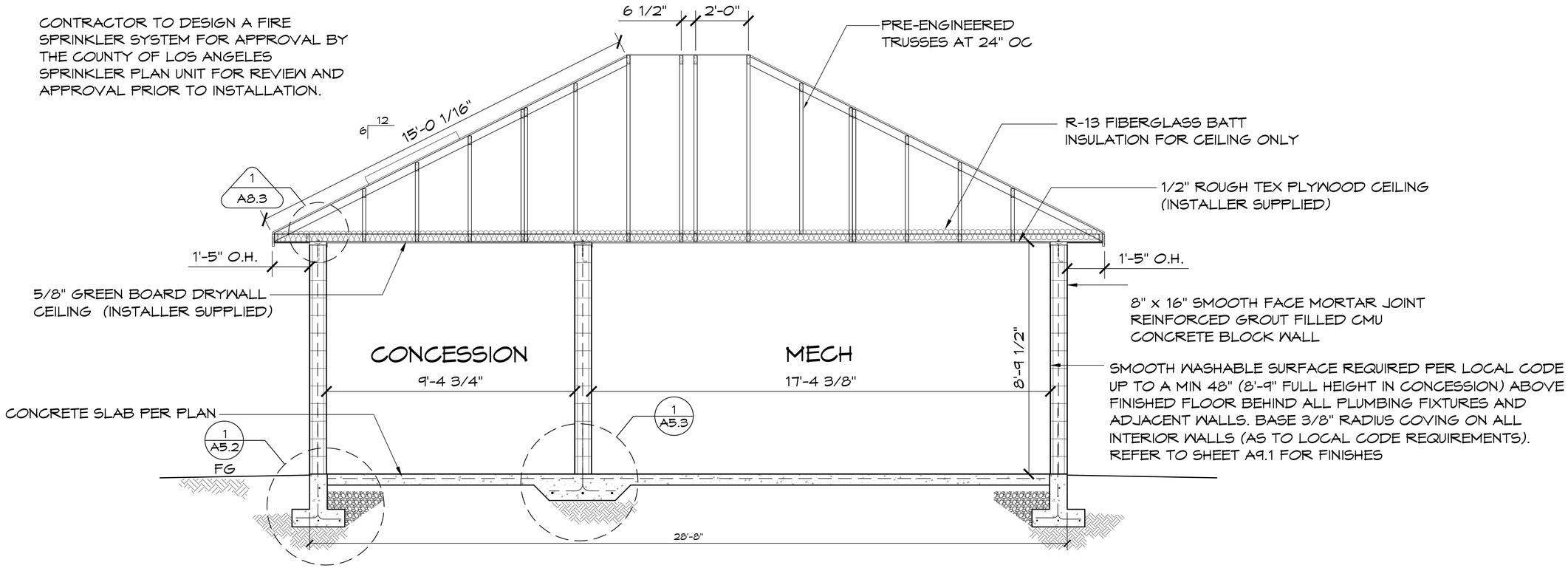

THE INSPECTION, HYDROSTATIC TEST AND FLUSHING OF THE UNDERGROUND FIRE PROTECTION SYSTEM SHALL BE WITNESSED BY AN AUTHORIZED FIRE DEPARTMENT REPRESENTATIVE. NO UNDERGROUND PIPING OR THRUST BLOCK SHALL BE COVERED WITH EARTH OR HIDDEN FROM VIEW UNTIL THE FIRE DEPARTMENT REPRESENTATIVE HAS BEEN NOTIFIED AND GIVEN NOT LESS THAN 48 HOURS IN WHICH TO INSPECT SUCH INSTALLATIONS. FIRE CODE 901.5, COUNTY OF LOS ANGELES FIRE DEPARTMENT REGULATION 7.

1 BUILDING SECTION

SCALE: 1/2" = 1'-0"

NOTES:

1. BRICK VENEER
   MFG: PACIFIC CLAY PRODUCTS
   TYPE: THIN BRICK VENEER-MODULAR FLAT & CORNER
   PRODUCT: SUNSET RED
2. MORTAR: USE TYPE S MORTAR TO APPLY THIN BRICK. THEN TUCKPOINT JOINTS W/ CUSTOM BLDG PRODUCTS SANDED GROUT.
3. BRICK SHALL MEET ASTM C-1088, TBX, SW STANDARDS.
4. BRICK SILL TO BE FULL DIM BRICK. MATCH COLOR TO THIN BRICK
5. FOR ANCHORAGE OF BRICK VENEER (CBC 1405.6) REFER TO DETAIL 2/A5.3

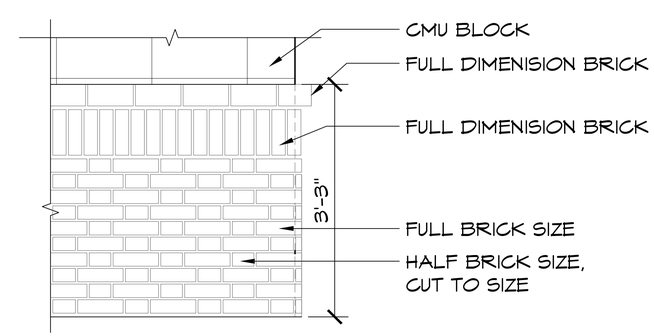

2 BRICK SIDING DETAIL

SCALE: 1/2" = 1'-0"

REV.	DATE:	BY	DESCRIPTION:
1	01-22-16	HB	ENGINEER REVISIONS

3-28-16

REGISTERED PROFESSIONAL ENGINEER
CHRISTOPHER J. ROMTEC
No. 74000
EXP. 12-16
CIVIL
STATE OF CALIFORNIA

© 2015 ROMTEC, INC. ALL RIGHTS RESERVED. THESE PLANS AND DRAWINGS MAY NOT BE REPRODUCED, ADAPTED OR FURTHER DISTRIBUTED, AND NO BUILDINGS MAY BE CONSTRUCTED FROM THESE PLANS, WITHOUT THE WRITTEN PERMISSION OF ROMTEC, INC.

Precision Structural Engineering, Inc.
Klamath Falls Office
250 Main Street, Klamath Falls, Oregon 97603
Phone: (541) 850-6300 Fax: (541) 850-6233
www.info@structure1.com
ROMTEC 216-23

ROMTEC
18240 NORTH BANK ROAD
ROSEBURG, OR 97470
(541)-496-3541 FAX (541)-496-0803

PROJECT: 2084 - SIERRA III MULTI-USER RESTROOM W/ CONCESSION
WESTLAKE VILLAGE COMMUNITY PARK
31107 EAST THOUSAND OAKS BLVD
WESTLAKE VILLAGE, CALIFORNIA
APN 2056-001-014

SHEET TITLE:
BUILDING SECTIONS

PLAN SET#: 18650
DATE: 12/09/2015
DRAWN BY: CR
SHEET NO. A4.1

GLAZED DOORS AND GLAZED OPENINGS WITHIN EXTERIOR DOORS SHALL MEET ONE OF THE FOLLOWING:
A. MULTI-PANE GLAZING UNITS WITH A MIN. OF ONE TEMPERED PANE; OR
B. HAVE A FIRE-RESISTANT RATING OF NOT LESS THAN 20 MINUTES, PER NFPA 257; OR
C. GLASS BLOCK UNITS: OR
D. MEET PERFORMANCE STANDARDS FOR SFM 12-7A-2 (RESIDENTIAL BUILDING CODE R327.8.2.1 AND BUILDING CODE 708A.2.1)

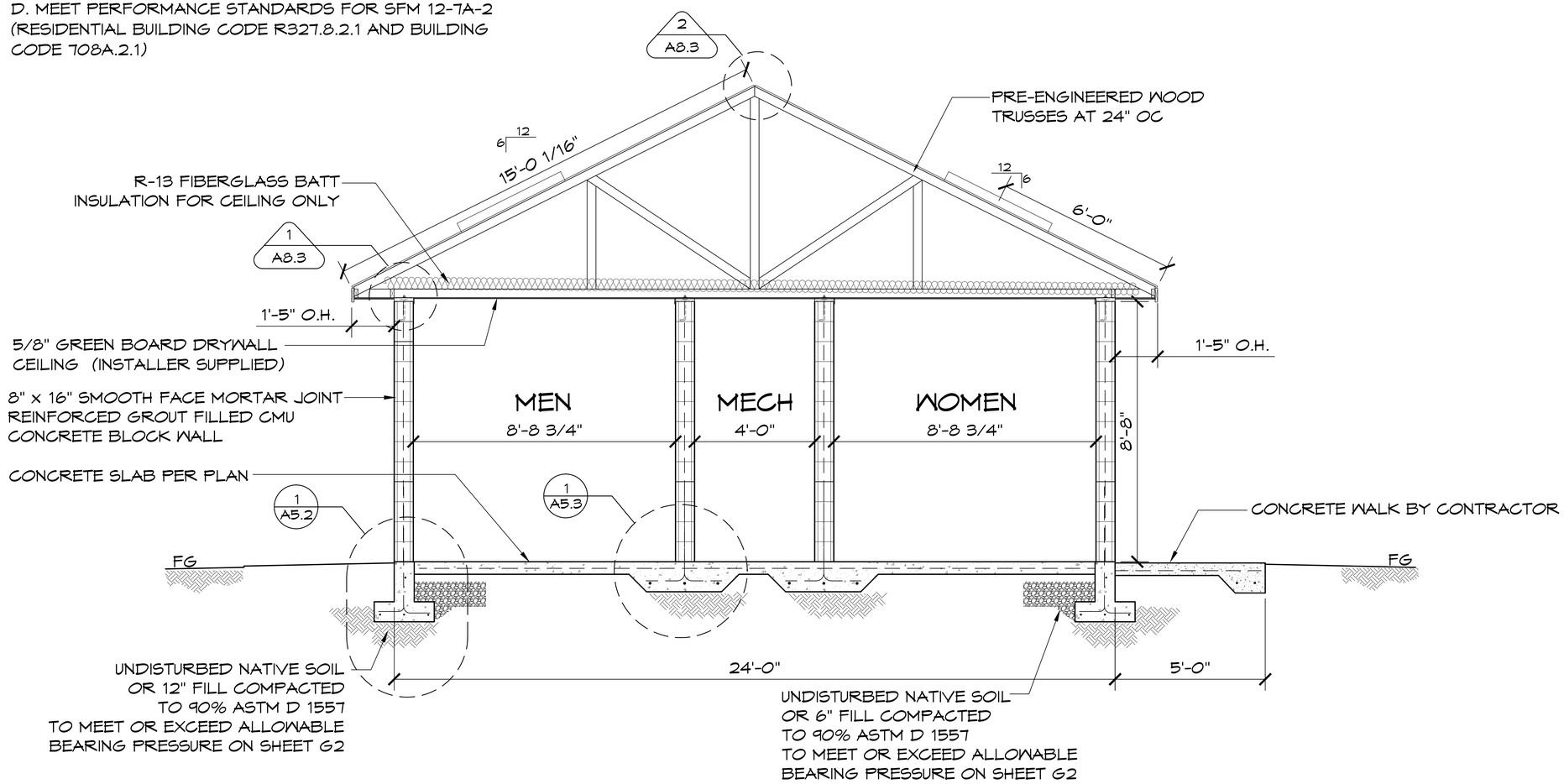

1 BUILDING SECTION

SCALE: 1/2" = 1'-0"

REV	DATE	BY	DESCRIPTION
1	3/28/16	JR	ENGINEER REQUIRED

3-28-16

REGISTERED PROFESSIONAL ENGINEER
CIVIL
STATE OF CALIFORNIA
EXP. 12-16

© 2015 ROMTEC, INC. ALL RIGHTS RESERVED. THESE PLANS AND DRAWINGS MAY NOT BE REPRODUCED, ADAPTED OR FURTHER DISTRIBUTED, AND NO BUILDINGS MAY BE CONSTRUCTED FROM THESE PLANS, WITHOUT THE WRITTEN PERMISSION OF ROMTEC, INC.

Precision Structural Engineering, Inc.
www.psi@psistructs.com
Bend, Oregon
250 Main Klamath Falls, Oregon 97603
Phone: (541) 850-4300 Fax: (541) 850-4253
www.psi@psistructs.com
ROMTEC 2/11-20

ROMTEC
18240 NORTH BANK ROAD
ROSEBURG, OR 97470
(541)-496-3541 FAX (541)-496-0803

© 2015 ROMTEC, INC. ALL RIGHTS RESERVED. THESE PLANS AND DRAWINGS MAY NOT BE REPRODUCED, ADAPTED OR FURTHER DISTRIBUTED, AND NO BUILDINGS MAY BE CONSTRUCTED FROM THESE PLANS, WITHOUT THE WRITTEN PERMISSION OF ROMTEC, INC.

PROJECT: 2084 - SIERRA III MULTI-USER RESTROOM W/ CONCESSION
WESTLAKE VILLAGE COMMUNITY PARK
31107 EAST THOUSAND OAKS BLVD
WESTLAKE VILLAGE, CALIFORNIA
APN 2056-001-014

SHEET TITLE:
BUILDING SECTIONS

PLAN SET# 18650
DATE: 12/09/2015
DRAWN BY: CR
SHEET NO. A4.2

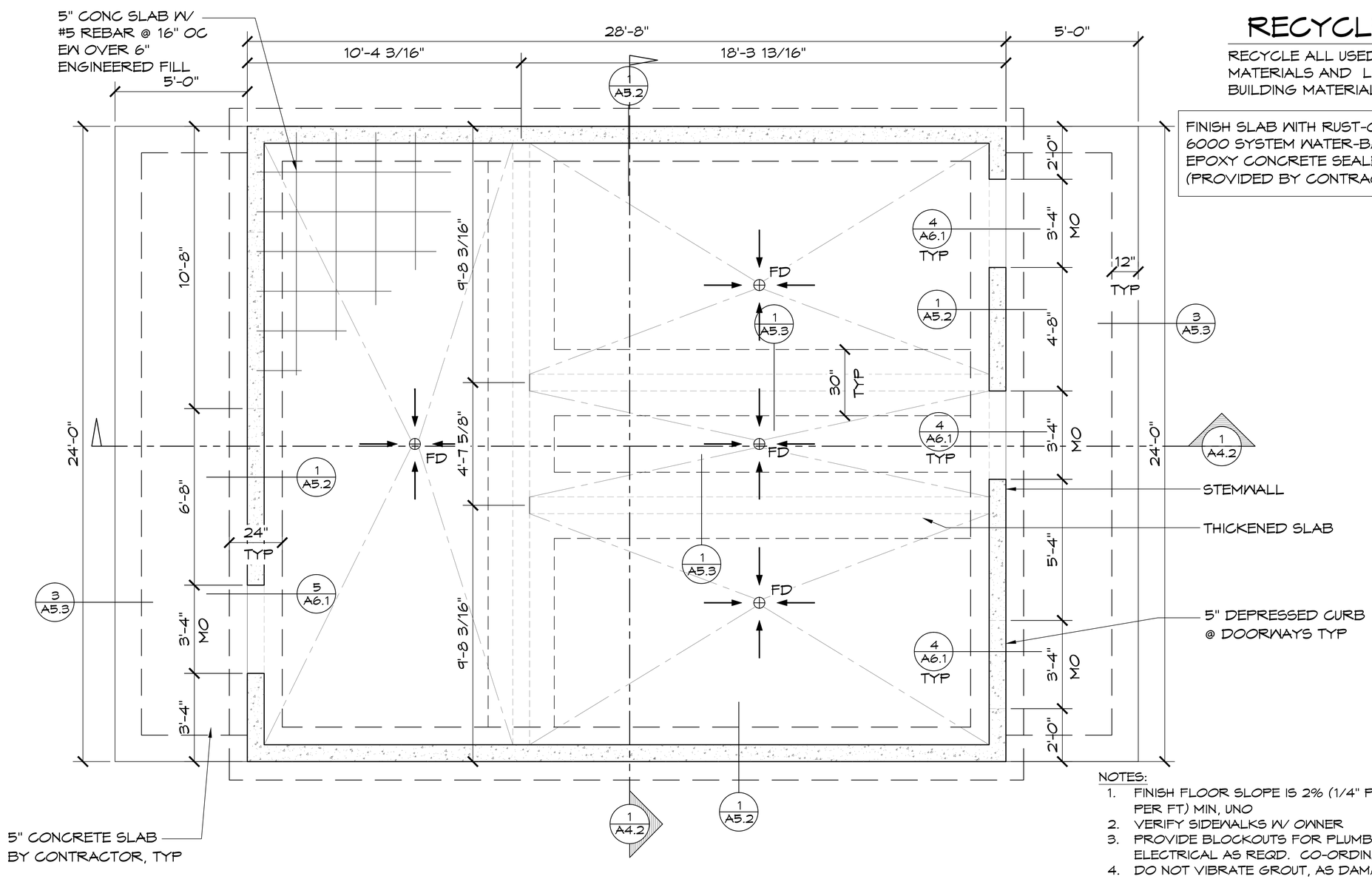

RECYCLE

RECYCLE ALL USED SHIPPING MATERIALS AND LEFT OVER BUILDING MATERIALS

FINISH SLAB WITH RUST-OLEUM 6000 SYSTEM WATER-BASED EPOXY CONCRETE SEALER (PROVIDED BY CONTRACTOR)

1 FOUNDATION PLAN

SCALE: 1/2" = 1'-0"

A B C D

NOTES:

1. FINISH FLOOR SLOPE IS 2% (1/4" PER FT) MAX & 1% (1/8" PER FT) MIN, UNO
2. VERIFY SIDEWALKS W/ OWNER
3. PROVIDE BLOCKOUTS FOR PLUMBING, MECHANICAL, & ELECTRICAL AS REQD. CO-ORDINATE W/ SUBS.
4. DO NOT VIBRATE GROUT, AS DAMAGE TO THE CMU MAY RESULT. USE A REBAR TO ROD THE GROUT.
5. SLUMP IS TO BE 4" +/- 1"
6. REBAR MIN. BEND SHALL BE NOT LESS THAN 6db INSIDE DIA. AS PER ACI 318 SECTION 7.2
7. SAW JOINTS BY CONTRACTOR. SLAB APPEARANCE IS A PRIORITY. SEE 4/A5.3 SPACE @ 10' O.C. MAX.
8. MAXIMUM SLOPE OF EXCAVATION MAY BE LIMITED BY LOCAL SOIL CONDITIONS. INCREASE DEPTH OF FORMED CONCRETE AS REQD.
9. CONCRETE SLAB BENEATH FLOOR MOUNTED FIXTURES IS TO BE LEVEL AND SMOOTH.
10. UNDER FOOTINGS: ALLOWABLE LOAD BEARING UNDISTURBED NATIVE SOIL OR LESS THAN 12" FILL COMPACTED TO 90% ASTM D 1557.

REV	DATE	BY	DESCRIPTION
4	3/28/16	JS	ENGINEER REDLINES

3-28-16

REGISTERED PROFESSIONAL ENGINEER
JAMES SCHMIDT
C 061802
EXP 12-16
CIVIL
STATE OF CALIFORNIA

© 2015 ROMTEC, INC. ALL RIGHTS RESERVED. THESE PLANS AND DRAWINGS MAY NOT BE REPRODUCED, ADAPTED OR FURTHER DISTRIBUTED, AND NO BUILDINGS MAY BE CONSTRUCTED FROM THESE PLANS, WITHOUT THE WRITTEN PERMISSION OF ROMTEC, INC.

Precision Structural Engineering, Inc.
www.info@structural1.com
Klamath Falls Office
250 Main Avenue, Suite 2, Klamath Falls, Oregon 97603
Phone: (541) 850-6300 Fax: (541) 850-6233
www.info@structural1.com
ROMTEC 216-23

ROMTEC
18240 NORTH BANK ROAD
ROSEBURG, OR 97470
(541)-496-3541 FAX (541)-496-0803

© 2013 ROMTEC, INC. ALL RIGHTS RESERVED. THESE PLANS AND DRAWINGS MAY NOT BE REPRODUCED, ADAPTED OR FURTHER DISTRIBUTED, AND NO BUILDINGS MAY BE CONSTRUCTED FROM THESE PLANS, WITHOUT THE WRITTEN PERMISSION OF ROMTEC, INC.

PROJECT: 2094 - SIERRA III MULTI-USER RESTROOM W/ CONCESSION
WESTLAKE VILLAGE COMMUNITY PARK
31107 EAST THOUSAND OAKS BLVD
WESTLAKE VILLAGE, CALIFORNIA
APN 2056-001-014

SHEET TITLE: FOUNDATION PLAN

PLAN SET#: 18650

DATE: 12/09/2015

DRAWN BY: CR

SHEET NO. A5.1

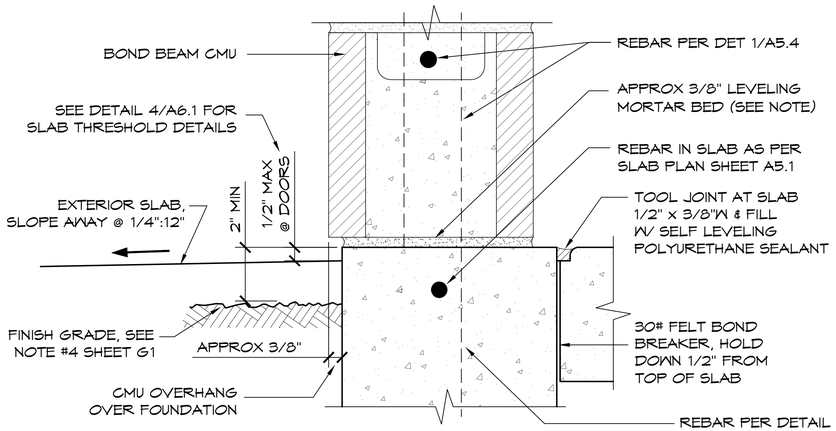

2 WALL-SLAB CONNECTION

SCALE: 6" = 1'-0"

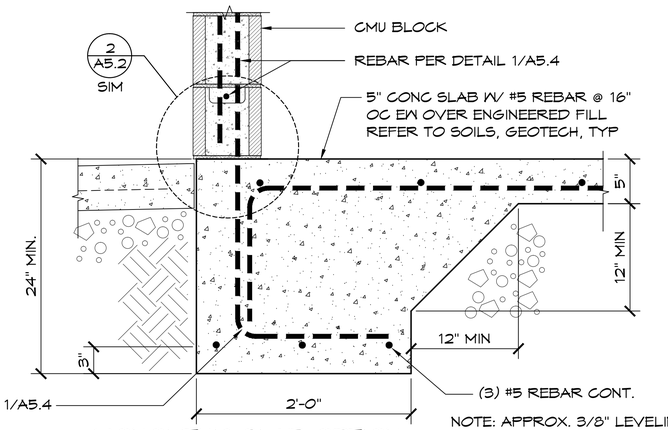

NOTE: APPROX. 3/8" LEVELING MORTAR BED W/ "HYDRATITE PLUS" MORTAR ADMIX. (ANY AND ALL MORTAR ADDITIVES MUST NOT CONTAIN CHLORIDES)

MONOLITHIC SLAB OPTION

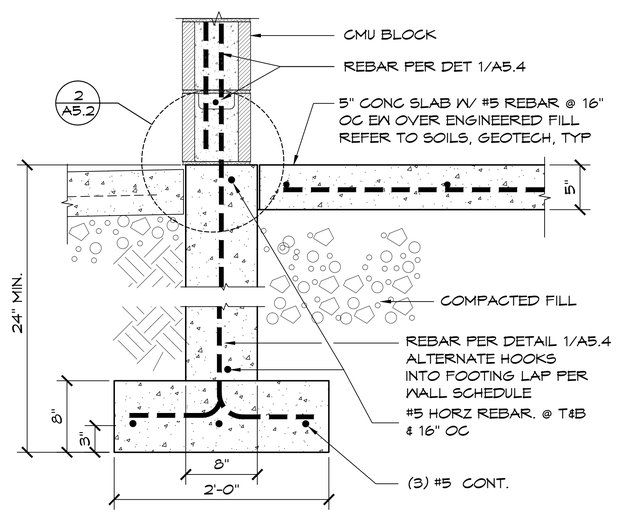

CONCRETE STEM WALL FOOTING OPTION

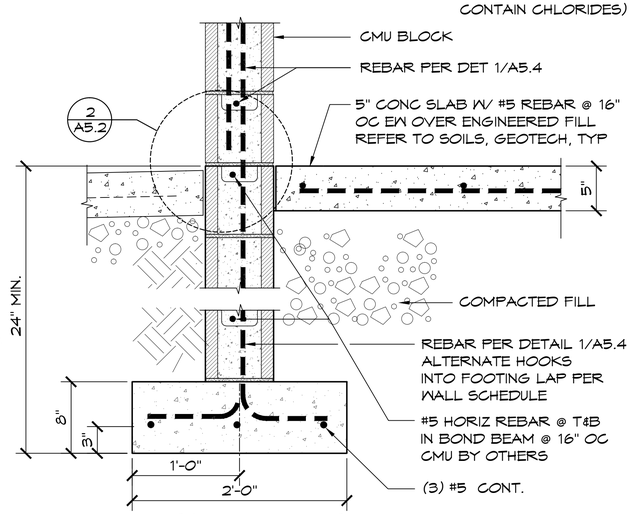

CMU STEM WALL OPTION

1 FOUNDATION DETAIL

SCALE: 3" = 1'-0"

NOTE: WHEN USING EITHER STEM WALL OPTION RECESS STEM WALL THICKNESS OF SLAB AT DOOR THRESHOLD

© 2015 ROMTEC, INC. ALL RIGHTS RESERVED. THESE PLANS AND DRAWINGS MAY NOT BE REPRODUCED, ADAPTED OR FURTHER DISTRIBUTED, AND NO BUILDINGS MAY BE CONSTRUCTED FROM THESE PLANS, WITHOUT THE WRITTEN PERMISSION OF ROMTEC, INC.

REV	DATE	BY	DESCRIPTION
4	3/28/16	JS	ENGINEER REDLINES

3-28-16

REGISTERED PROFESSIONAL ENGINEER STATE OF CALIFORNIA CIVIL

Precision Structural Engineering, Inc.
www.info@structure1.com
Kevin Fitzgerald, Principal
250 Main Klamath Falls, Oregon 97603
Phone: (541) 850-6300 Fax: (541) 850-6233
www.info@structure1.com
ROMTEC 216123

ROMTEC
16240 NORTH BANK ROAD
ROSEBURG, OR 97470
(541)-496-3541 FAX (541)-496-0803

© 2015 ROMTEC, INC. ALL RIGHTS RESERVED. THESE PLANS AND DRAWINGS MAY NOT BE REPRODUCED, ADAPTED OR FURTHER DISTRIBUTED, AND NO BUILDINGS MAY BE CONSTRUCTED FROM THESE PLANS, WITHOUT THE WRITTEN PERMISSION OF ROMTEC, INC.

PROJECT: 2084 - SIERRA II MULTI-USER RESTROOM W/ CONCESSION
WESTLAKE VILLAGE COMMUNITY PARK
31107 EAST THOUSAND OAKS BLVD
WESTLAKE VILLAGE, CALIFORNIA
APN 2056-001-014

SHEET TITLE:
FOUNDATION DETAILS

PLAN SET# 18650

DATE: 12/09/2015

DRAWN BY: CR

SHEET NO. A5.2

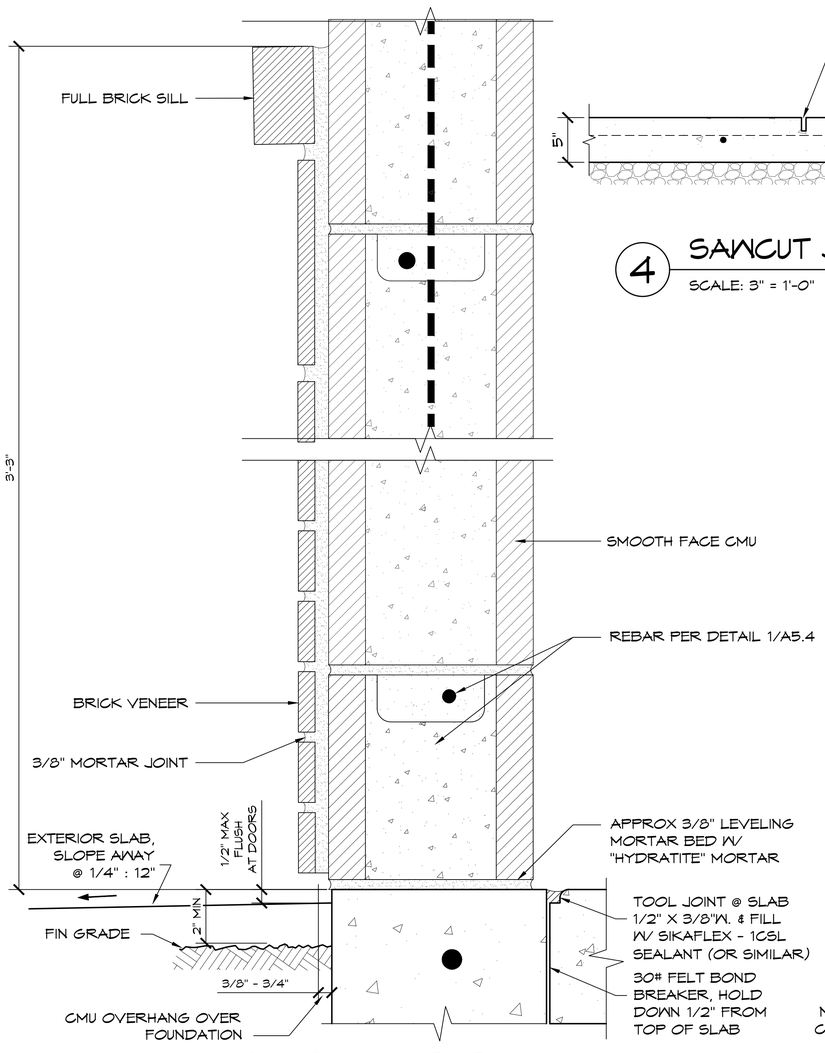

2 WALL-SLAB CONNECTION

SCALE: 6" = 1'-0"

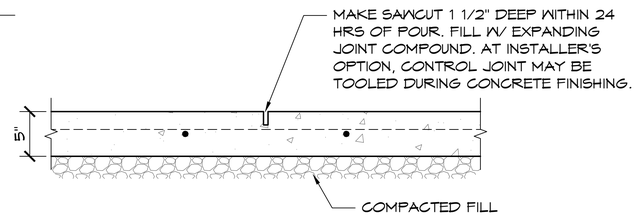

4 SAWCUT JOINT

SCALE: 3" = 1'-0"

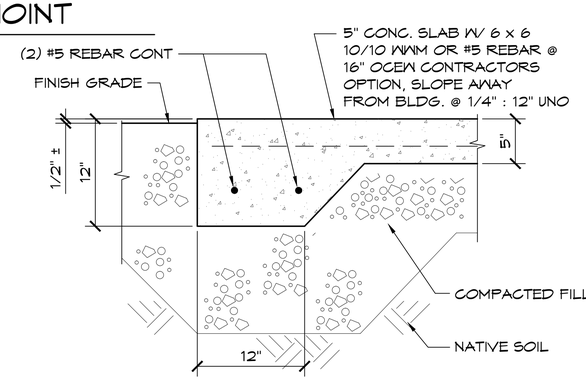

3 EDGE OF CONC SLAB

SCALE: 3" = 1'-0"

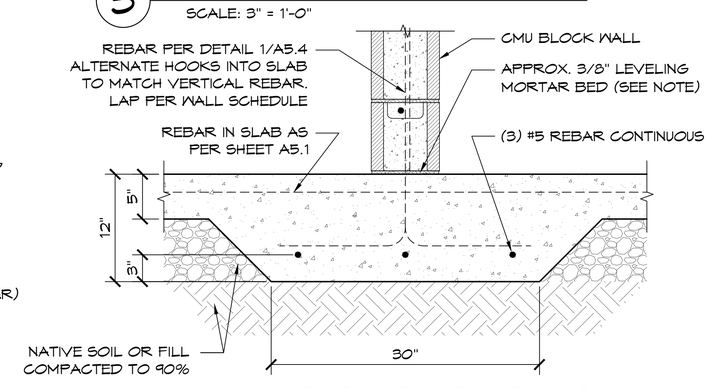

1 THICKENED SLAB AT WALL

SCALE: 3" = 1'-0"

REV	DATE	BY	DESCRIPTION
4	3/28/16	JS	ENGINEER REDLINES

3-28-16

REGISTERED PROFESSIONAL ENGINEER
CHRISTOPHER A. ROMTEC
EXP. 12-16
CIVIL
STATE OF CALIFORNIA

Precision Structural Engineering, Inc.
Klamath Falls, Oregon
www.info@structure1.com
250 Main Klamath Falls, Oregon 97603
Phone: (541) 850-6300 Fax: (541) 850-6233
www.info@structure1.com
ROMTEC 216-23

ROMTEC
18240 NORTH BANK ROAD
ROSEBURG, OR 97470
(541)-496-3541 FAX (541)-496-0803

© 2019 ROMTEC, INC. ALL RIGHTS RESERVED. THESE PLANS AND DRAWINGS MAY NOT BE REPRODUCED, ADAPTED OR FURTHER DISTRIBUTED, AND NO BUILDINGS MAY BE CONSTRUCTED FROM THESE PLANS, WITHOUT THE WRITTEN PERMISSION OF ROMTEC, INC.

PROJECT: 2084 - SIERRA III MULTI-USER RESTROOM W/ CONCESSION
WESTLAKE VILLAGE COMMUNITY PARK
31107 EAST THOUSAND OAKS BLVD
WESTLAKE VILLAGE, CALIFORNIA
APN 2056-001-014

SHEET TITLE:
FOUNDATION DETAILS

PLAN SET# 18650

DATE: 12/09/2015

DRAWN BY: CR

SHEET NO. A5.3

© 2015 ROMTEC, INC. ALL RIGHTS RESERVED. THESE PLANS AND DRAWINGS MAY NOT BE REPRODUCED, ADAPTED OR FURTHER DISTRIBUTED, AND NO BUILDINGS MAY BE CONSTRUCTED FROM THESE PLANS, WITHOUT THE WRITTEN PERMISSION OF ROMTEC, INC.

REFER TO SHEET A2.1 & A3.1 FOR ADDITIONAL REBAR REQUIREMENTS

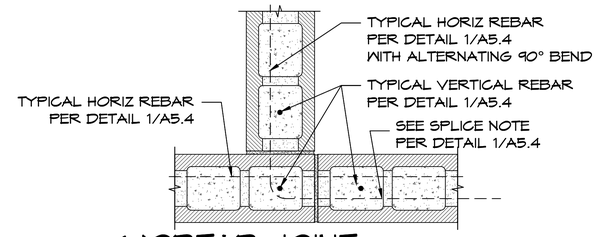

5 MORTAR JOINT CMU INTERSECTION DETAIL

SCALE: 1 1/2" = 1'-0"

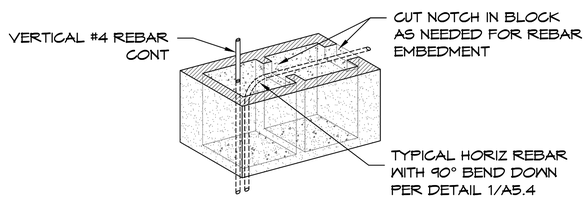

3 MORTAR JOINT CMU WALL END DETAIL

SCALE: 1 1/2" = 1'-0"

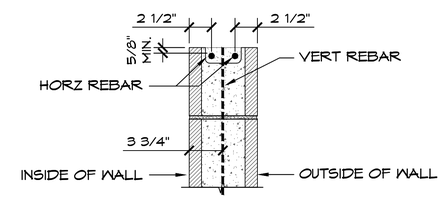

NOTE: REBAR INSTALLED AS PER ACI 530-08

4 REBAR PLACEMENT

SCALE: 1 1/2" = 1'-0"

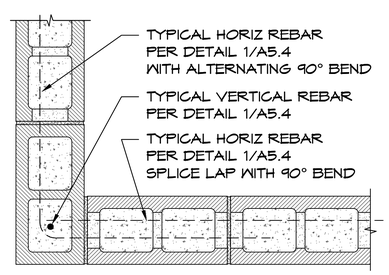

2 MORTAR JOINT CMU CORNER DETAIL

SCALE: 1 1/2" = 1'-0"

CMU REBAR SCHEDULE		
REBAR	MIN. LAP	BEND RAD.
#4	24"	3" MIN.
#5	30"	3-3/4" MIN.

VERTICAL #4 REBAR @ 24"oc
HORIZONTAL #5 REBAR @ 24"oc
(2) #4 REBAR ALL SIDES OF OPENINGS
(2) #4 REBAR ABOVE & BELOW MAJOR OPENINGS
(2) #4 REBAR @ TOP COURSE

CMU REBAR NOTES:
- BENDS: MIN. INSIDE BEND RADIUS SHALL BE NOT LESS THAN 6d AS PER ACI 530-08 SECTION 1.15.6
- SPLICES: LAP SPLICES ARE PERMITTED AS PER ACI 530-08 SECTION 2.1.9.7

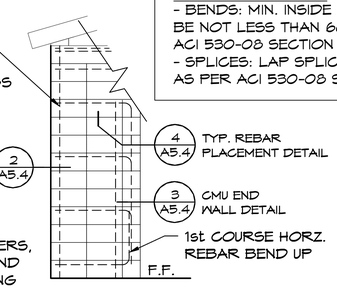

NOTE: HORIZONTAL REBAR TO GO AROUND VERTICAL REINFORCEMENT WITH STANDARD BEND AT ALL CORNERS, AND HORZ REBAR TO BEND DOWN AND LAP VERTICAL REBAR AT ALL OPENING LOCATIONS AS PER DETAILS THIS PAGE.

1 CMU REBAR LAYOUT DTL

SCALE: 1/2" = 1'-0"

REV	DATE	BY	DESCRIPTION
4	3/28/16	JS	ENGINEER REQUESTS

3-28-16

REGISTERED PROFESSIONAL ENGINEER
CHRISTOPHER RAY RAMSEY
C049806
EXP. 12-16
CIVIL
STATE OF CALIFORNIA

© 2015 ROMTEC, INC. ALL RIGHTS RESERVED. THESE PLANS AND DRAWINGS MAY NOT BE REPRODUCED, ADAPTED OR FURTHER DISTRIBUTED, AND NO BUILDINGS MAY BE CONSTRUCTED FROM THESE PLANS, WITHOUT THE WRITTEN PERMISSION OF ROMTEC, INC.

© 2015 ROMTEC, INC. ALL RIGHTS RESERVED. THESE PLANS AND DRAWINGS MAY NOT BE REPRODUCED, ADAPTED OR FURTHER DISTRIBUTED, AND NO BUILDINGS MAY BE CONSTRUCTED FROM THESE PLANS, WITHOUT THE WRITTEN PERMISSION OF ROMTEC, INC.

PROJECT: 2084 - SIERRA III MULTI-USER RESTROOM W/ CONCESSION
WESTLAKE VILLAGE COMMUNITY PARK
31107 EAST THOUSAND OAKS BLVD
WESTLAKE VILLAGE, CALIFORNIA
APN 2056-001-014

SHEET TITLE:
STRUCTURAL DETAILS

ROMTEC
18240 NORTH BANK ROAD
ROSEBURG, OR 97470
(541)-496-3541 FAX (541)-496-0803

Precision Structural Engineering, Inc.
www.info@structure1.com
Klamath Falls, Oregon
250 Main Klamath Falls, Oregon 97603
Phone: (541) 850-6300 Fax: (541) 850-6233
www.info@structure1.com
ROMTEC 216-23

PLAN SET# 18650
DATE: 12/09/2015
DRAWN BY: CR
SHEET NO. A5.4

DOOR SCHEDULE

NO.	SIZE (WxHxT)	DOOR	FRAME	HARDWARE GROUP	DOOR SWING	REMARKS
1	36" x 84" x 1 3/4"	SL20	F16	DO-2	LEFT	
2	36" x 84" x 1 3/4"	SL20	F16	DO-1	LEFT	
3	36" x 84" X 1 3/4"	SL20	F16	DO-2	RIGHT	
4	36" x 84" X 1 3/4"	SL20	F16	DO-1	LEFT	THRESHOLD & DOOR SWEEP REFER TO ELECTRICAL DETAIL 3/E2 FOR AIR CURTAIN REQUIREMENTS

DOOR HARDWARE SCHEDULE (QTYS PER DOOR)

GROUP DO-1	GROUP DO-2	
3	3	EACH HINGE 4.5" x 4.5" S.S. (NRP)
1	1	HEAVY DUTY DOOR CLOSER W/STOP ARM, (USE THRU BOLT ANCHORING OPTION)
1	1	LEVER LOCKSET HAGER 3570-2 3/4"-US26D-WTN-SCC-ASA (CLASSROOM)
-	1	EACH HAGER POWER DOOR LOCK- ELECTROMAGNETIC LOCK 2942 W/ DELAYED ACTION SWITCH 2977, SHARED TIMER 14-2
1	1	18"X18" LOUVERED VENT
6	6	WIRE DOOR CLIPS

NOTE: ALL DOORS MAY BE OPENED FROM THE INSIDE W/O KEY, SPECIAL KNOWLEDGE, OR EFFORT. 5# MAX OPENING EFFORT DOOR IS EQUIPPED W/ SINGLE-EFFORT, NON-GRASP HARDWARE. DOOR COMPLIES WITH ADA REQUIREMENT FOR AN INSIDE LOCK.

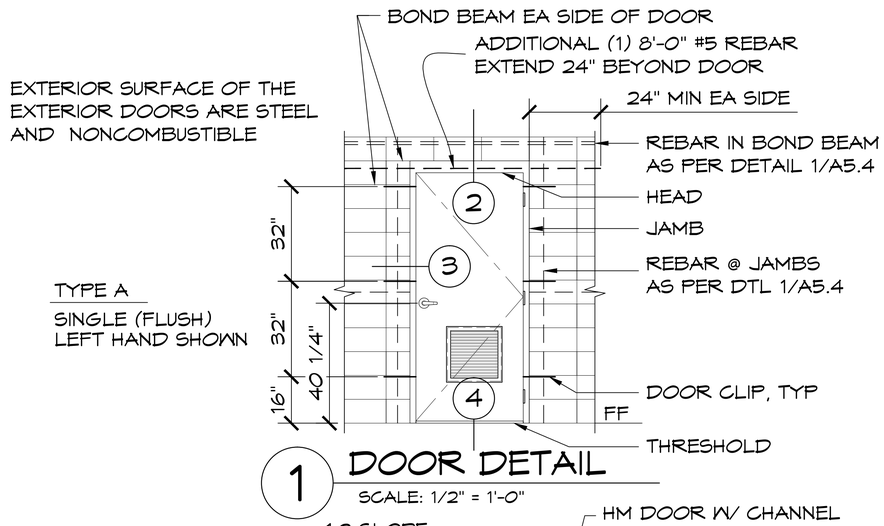

1 DOOR DETAIL
SCALE: 1/2" = 1'-0"

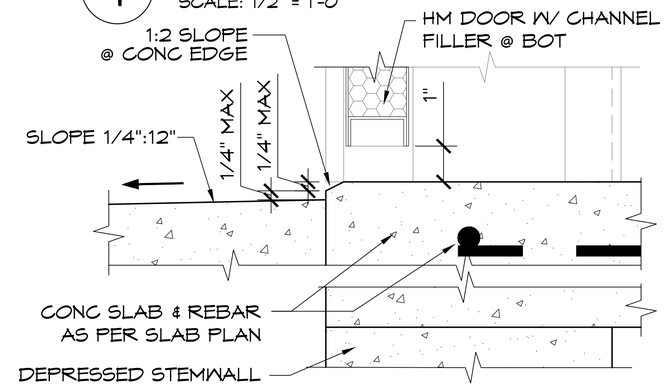

4 THRESHOLD DETAIL
SCALE: 6" = 1'-0"

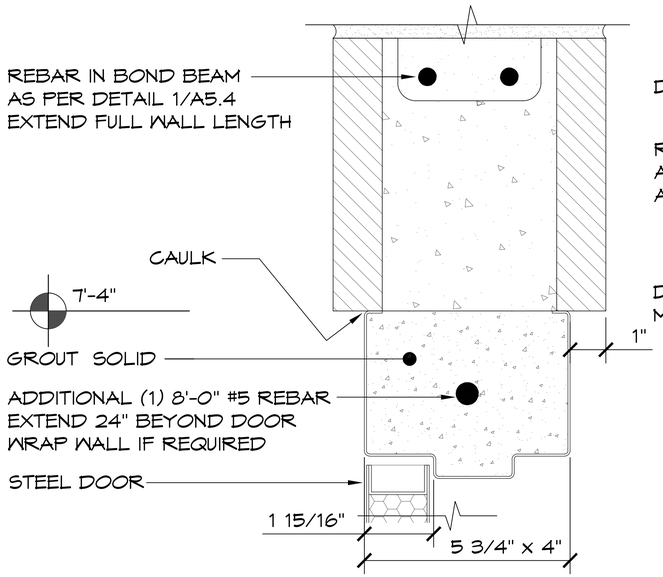

2 HEADER DETAIL
SCALE: 6" = 1'-0"

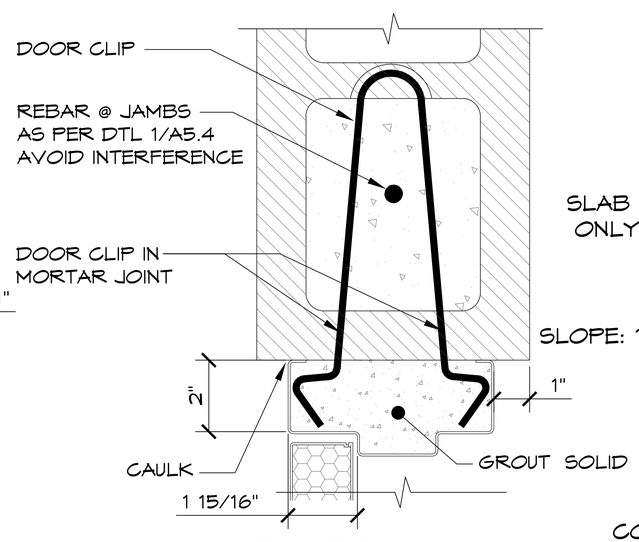

3 JAMB DETAIL
SCALE: 6" = 1'-0"

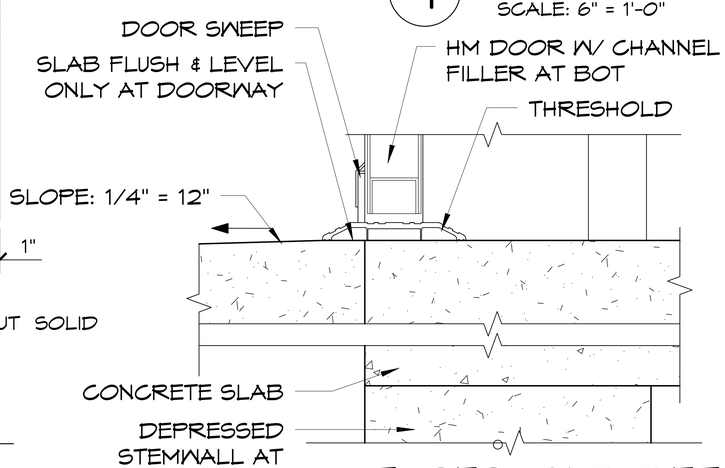

5 THRESHOLD DETAIL
SCALE: 6" = 1'-0"

© 2015 ROMTEC, INC. ALL RIGHTS RESERVED. THESE PLANS AND DRAWINGS MAY NOT BE REPRODUCED, ADAPTED OR FURTHER DISTRIBUTED, AND NO BUILDINGS MAY BE CONSTRUCTED FROM THESE PLANS, WITHOUT THE WRITTEN PERMISSION OF ROMTEC, INC.

REV.	DATE	BY	DESCRIPTION
4	3/28/16	JS	ENGINEER REDLINES

3-28-16
REGISTERED PROFESSIONAL ENGINEER
CIVIL
STATE OF CALIFORNIA
EXP. 12-16

Precision Structural Engineering, Inc.
www.psei@structure1.com
Klamath Falls Office
250 Main Klamath Falls, Oregon 97603
Phone: (541) 850-6300 Fax: (541) 850-6233
www.psei@structure1.com
REVISED: 2/9/23

© 2015 ROMTEC, INC. ALL RIGHTS RESERVED. THESE PLANS AND DRAWINGS MAY NOT BE REPRODUCED, ADAPTED OR FURTHER DISTRIBUTED, AND NO BUILDINGS MAY BE CONSTRUCTED FROM THESE PLANS, WITHOUT THE WRITTEN PERMISSION OF ROMTEC, INC.

ROMTEC
16240 NORTH BANK ROAD
ROSEBURG, OR 97470
(541)-496-3541 FAX (541)-496-0803

PROJECT: 2084 - SIERRA III MULTI-USER RESTROOM W/ CONCESSION
WESTLAKE VILLAGE COMMUNITY PARK
31107 EAST THOUSAND OAKS BLVD
WESTLAKE VILLAGE, CALIFORNIA
APN 2056-001-014

SHEET TITLE:
DOOR SCHEDULE & DETAILS

PLAN SET# 18650
DATE: 12/09/2015
DRAWN BY: CR
SHEET NO. A6.1

ROLL-UP CURTAIN W/ COUNTER SCHEDULE

NO.	SIZE (WxH)	DOOR	FRAME	HARDWARE GROUP	REMARKS
5	80" x 48"	F128 SLAT	SERIES 651	1	

CURTAIN HARDWARE SCHEDULE

GROUP 1 (QTYS PER CURTAIN)

1 EACH POWDER COATED SM TRIM
8 EACH #12 x 1 1/2" SCREWS
1 EACH COUNTER TOP; FRAME: POWDER COATED BLACK, COUNTER TOP: STAINLESS STEEL
8 EACH 1/2" x 4 1/2" EXPANSION ANCHORS
1 LOCKING MECHANISM (INTERIOR SLIDE BOLTS)

CURTAIN TYPES

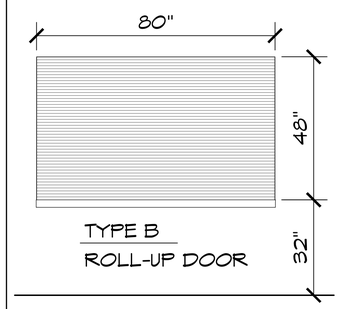

EXTERIOR SURFACE OF THE EXTERIOR DOORS ARE STEEL AND NONCOMBUSTIBLE

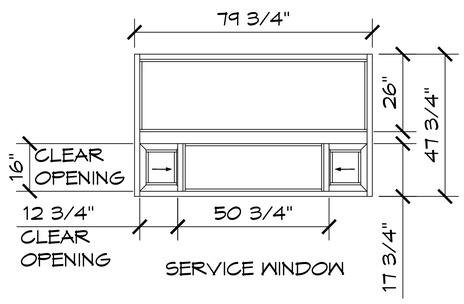

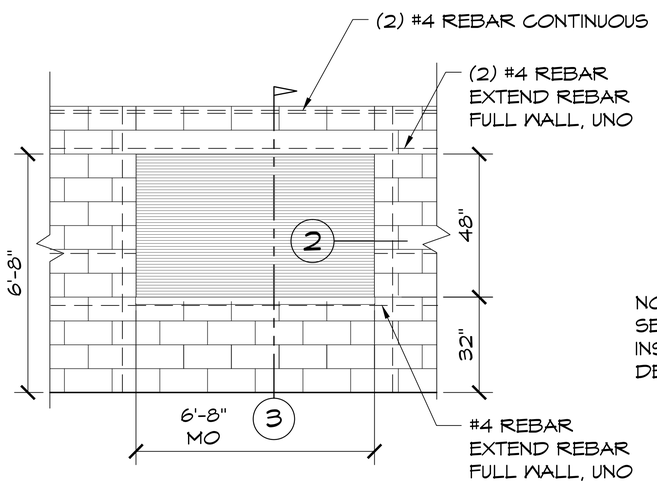

NOTE:
SEE DOOR MANUFACTURER'S INSTALLATION MANUAL FOR DETAILED INSTRUCTIONS

1 ROLL-UP CURTAIN DETAIL

SCALE: 1/2" = 1'-0"

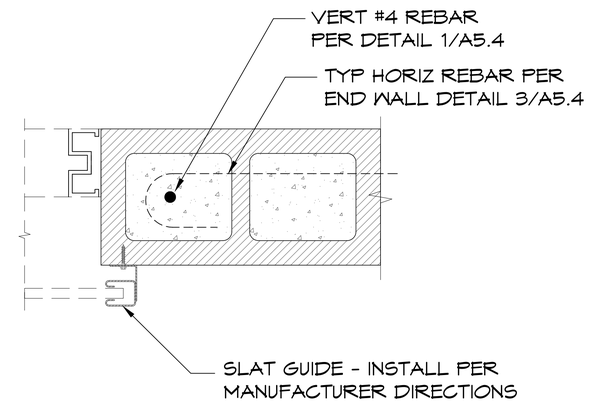

2 DOOR CASING DETAIL

SCALE: 3" = 1'-0"

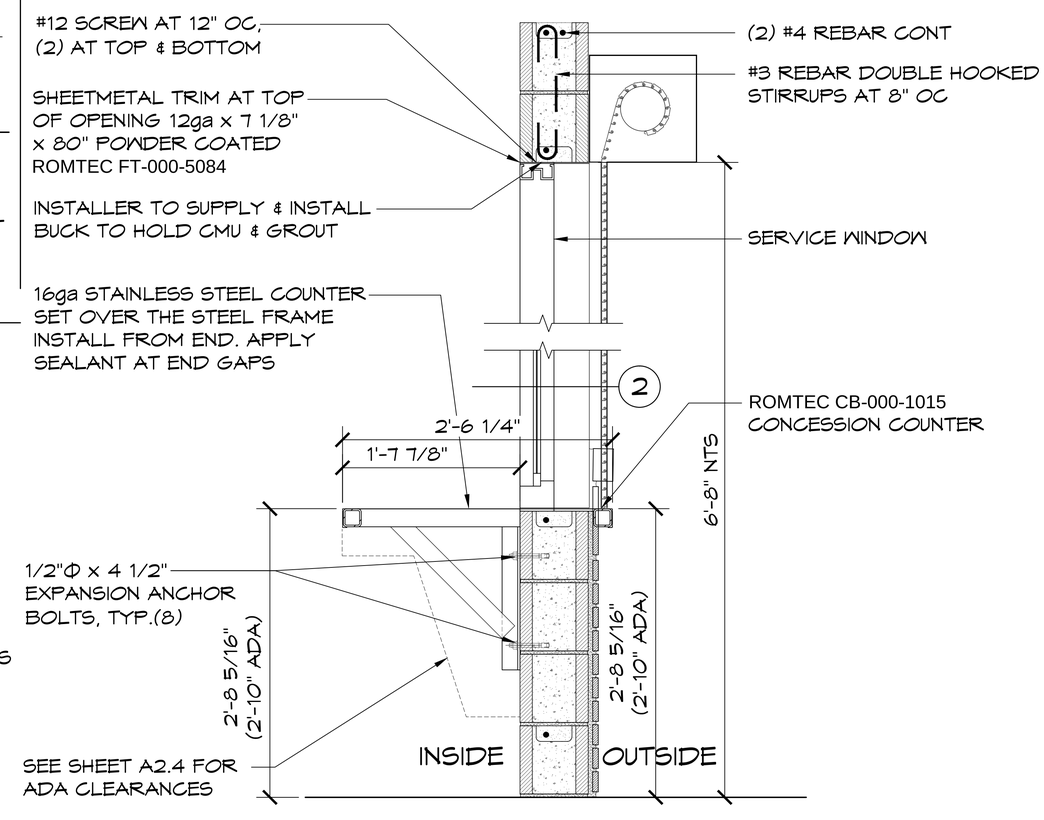

3 ROLL-UP CURTAIN SECTION

SCALE: 1 1/2" = 1'-0"

REV	DATE	BY	DESCRIPTION
4	3/28/16	JS	ENGINEER REDLINES

3-28-16
REGISTERED PROFESSIONAL ENGINEER
CIVIL
STATE OF CALIFORNIA
EXP. 12-16

© 2015 ROMTEC, INC. ALL RIGHTS RESERVED. THESE PLANS AND DRAWINGS MAY NOT BE REPRODUCED, ADAPTED OR FURTHER DISTRIBUTED, AND NO BUILDINGS MAY BE CONSTRUCTED FROM THESE PLANS, WITHOUT THE WRITTEN PERMISSION OF ROMTEC, INC.

Precision Structural Engineering, Inc.
Kimberly A. Dalton
250 Main Klamath Falls, Oregon 97603
Phone: (541) 850-6300 Fax: (541) 850-6233
www.info@structure1.com
ROMTEC: 216-23

ROMTEC
18240 NORTH BANK ROAD
ROSEBURG, OR 97470
(541)-496-3541 FAX (541)-496-0803

PROJECT: 2084 - SIERRA III MULTI-USER RESTROOM W/ CONCESSION
WESTLAKE VILLAGE COMMUNITY PARK
31107 EAST THOUSAND OAKS BLVD
WESTLAKE VILLAGE, CALIFORNIA
APN 2056-001-014

SHEET TITLE:
ROLL-UP DOOR SCHEDULE & DETAILS

PLAN SET# 18650
DATE: 12/09/2015
DRAWN BY: CR
SHEET NO. A6.2

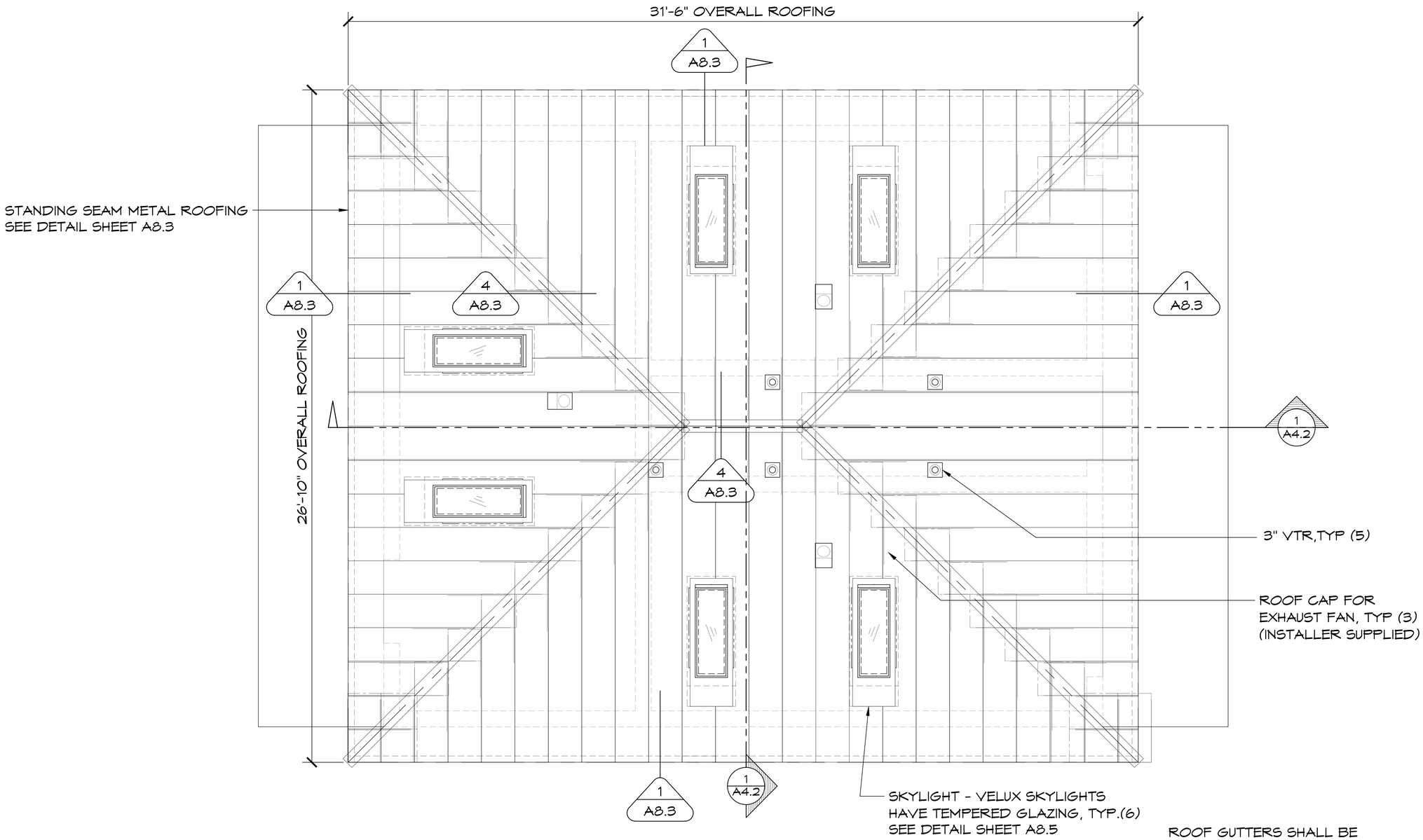

1 ROOF PLAN

SCALE: 1/2" = 1'-0"

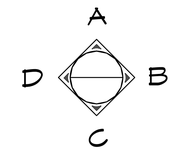

ROOF GUTTERS SHALL BE PROVIDED WITH A MEANS TO PREVENT THE ACCUMULATION OF LEAVES AND DEBRIS IN THE GUTTER. (RESIDENTIAL CODE R327.534 AND BUILDING CODE 705A.4)

REV	DATE	BY	DESCRIPTION
4	3/28/16	JS	ENGINEER REDLINES

3-28-16

REGISTERED PROFESSIONAL ENGINEER
C-18802
EXP. 12-16
CIVIL
STATE OF CALIFORNIA

© 2015 ROMTEC, INC. ALL RIGHTS RESERVED. THESE PLANS AND DRAWINGS MAY NOT BE REPRODUCED, ADAPTED OR FURTHER DISTRIBUTED, AND NO BUILDINGS MAY BE CONSTRUCTED FROM THESE PLANS, WITHOUT THE WRITTEN PERMISSION OF ROMTEC, INC.

ROMTEC
18240 NORTH BANK ROAD
ROSEBURG, OR 97470
(541)-496-3541 FAX (541)-496-0803

Precision Structural Engineering, Inc.
www.info@structural1.com
Klamath Falls Office
250 Main Klamath Falls, Oregon 97603
Phone: (541) 850-6300 Fax: (541) 850-6233
www.info@structural1.com
ROMTEC 216-23

PROJECT: 2084 - SIERRA II MULTI-USER RESTROOM W/ CONCESSION
WESTLAKE VILLAGE COMMUNITY PARK
31107 EAST THOUSAND OAKS BLVD
WESTLAKE VILLAGE, CALIFORNIA
APN 2056-001-014

SHEET TITLE: ROOF PLAN

PLAN SET#: 18650

DATE: 12/09/2015

DRAWN BY: CR

SHEET NO. A8.1

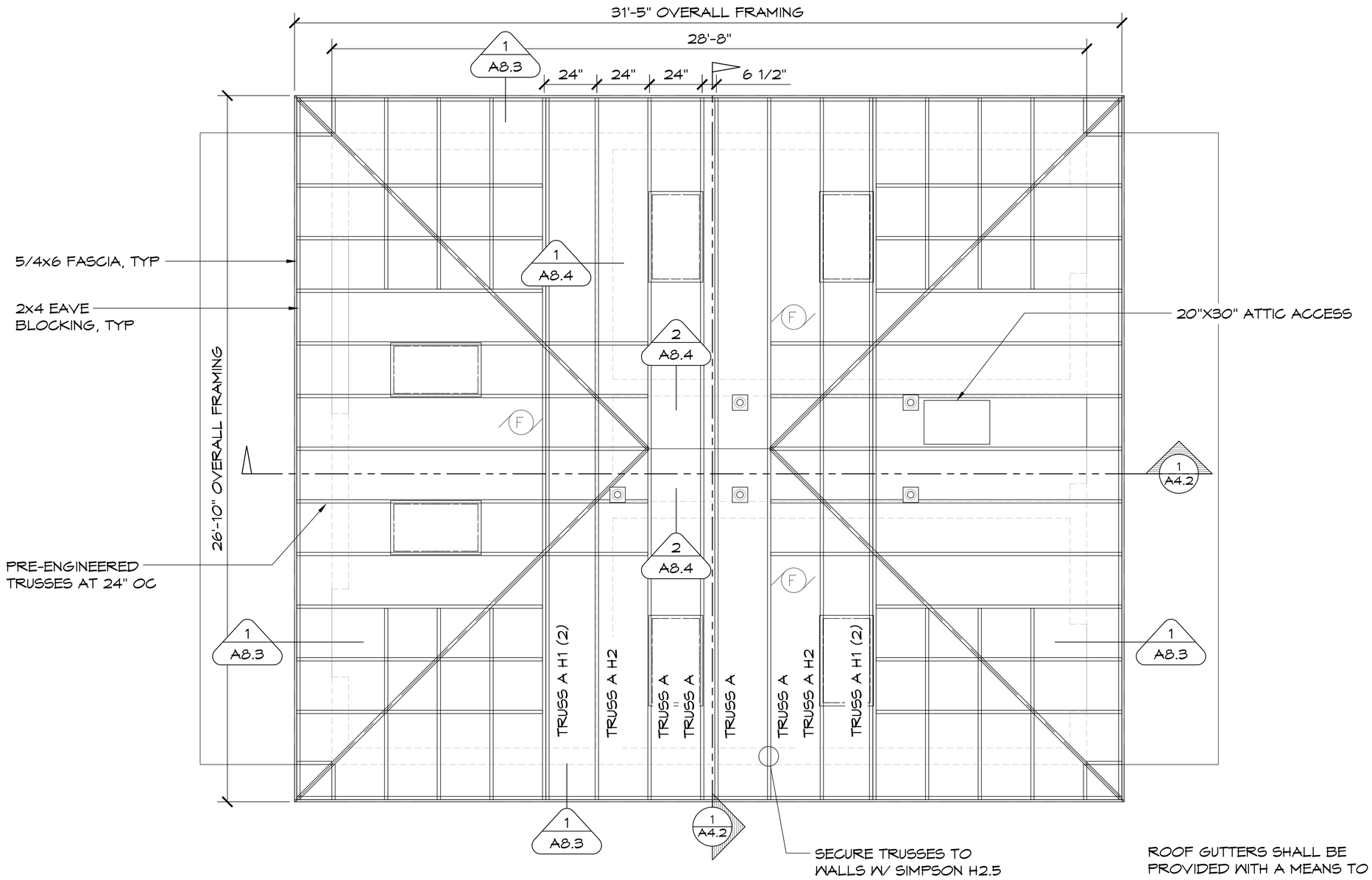

1 ROOF FRAMING PLAN

SCALE: 1/2" = 1'-0"

A B C D

ROOF GUTTERS SHALL BE PROVIDED WITH A MEANS TO PREVENT THE ACCUMULATION OF LEAVES AND DEBRIS IN THE GUTTER. (RESIDENTIAL CODE R327.534 AND BUILDING CODE 705A.4)

REV	DATE	BY	DESCRIPTION
4	3/28/16	JS	ENGINEER REDLINES

3-28-16

REGISTERED PROFESSIONAL ENGINEER — CIVIL — STATE OF CALIFORNIA — EXP. 12-16

© 2015 ROMTEC, INC. ALL RIGHTS RESERVED. THESE PLANS AND DRAWINGS MAY NOT BE REPRODUCED, ADAPTED OR FURTHER DISTRIBUTED, AND NO BUILDINGS MAY BE CONSTRUCTED FROM THESE PLANS, WITHOUT THE WRITTEN PERMISSION OF ROMTEC, INC.

Precision Structural Engineering, Inc.
www.info@structure1.com
Klamath Falls, Oregon
250 Main Klamath Falls, Oregon 97603
Phone: (541) 850-6200 Fax: (541) 850-6233
www.info@structure1.com

ROMTEC 216-23

ROMTEC
18240 NORTH BANK ROAD
ROSEBURG, OR 97470
(541)-496-3541 FAX (541)-496-0803

© 2019 ROMTEC, INC. ALL RIGHTS RESERVED. THESE PLANS AND DRAWINGS MAY NOT BE REPRODUCED, ADAPTED OR FURTHER DISTRIBUTED, AND NO BUILDINGS MAY BE CONSTRUCTED FROM THESE PLANS, WITHOUT THE WRITTEN PERMISSION OF ROMTEC, INC.

PROJECT: 2084 - SIERRA III MULTI-USER RESTROOM W/ CONCESSION
WESTLAKE VILLAGE COMMUNITY PARK
31107 EAST THOUSAND OAKS BLVD
WESTLAKE VILLAGE, CALIFORNIA
APN 2056-001-014

SHEET TITLE: ROOF FRAMING PLAN

PLAN SET# 18650

DATE: 12/09/2015

DRAWN BY: CR

SHEET NO. A8.2

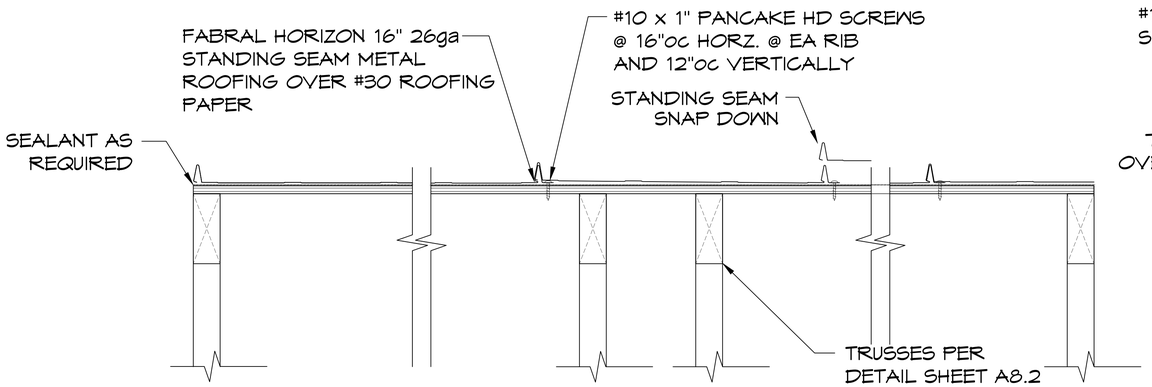

3 GABLE ROOFING DETAIL

SCALE: 3" = 1'-0"

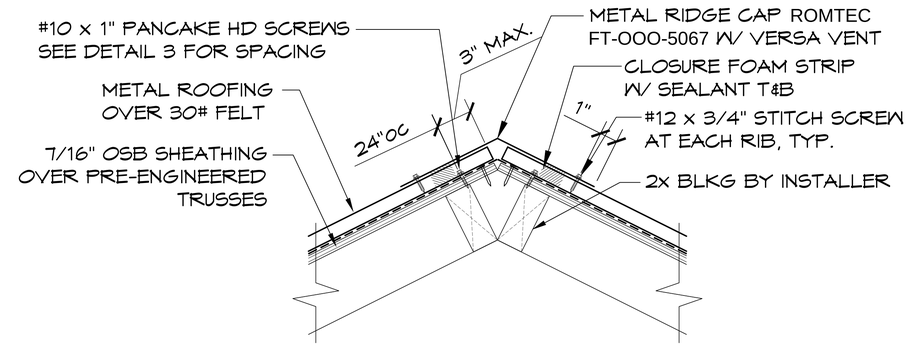

4 RIDGE ROOFING DETAIL

SCALE: 3" = 1'-0"

NOTE:
CONTRACTOR SHALL INSTALL ROOFING IN STRICT ACCORDANCE WITH INSTALLATION REQUIREMENTS OF ROOFING MANUFACTURER FOR HIGH WIND AREAS.

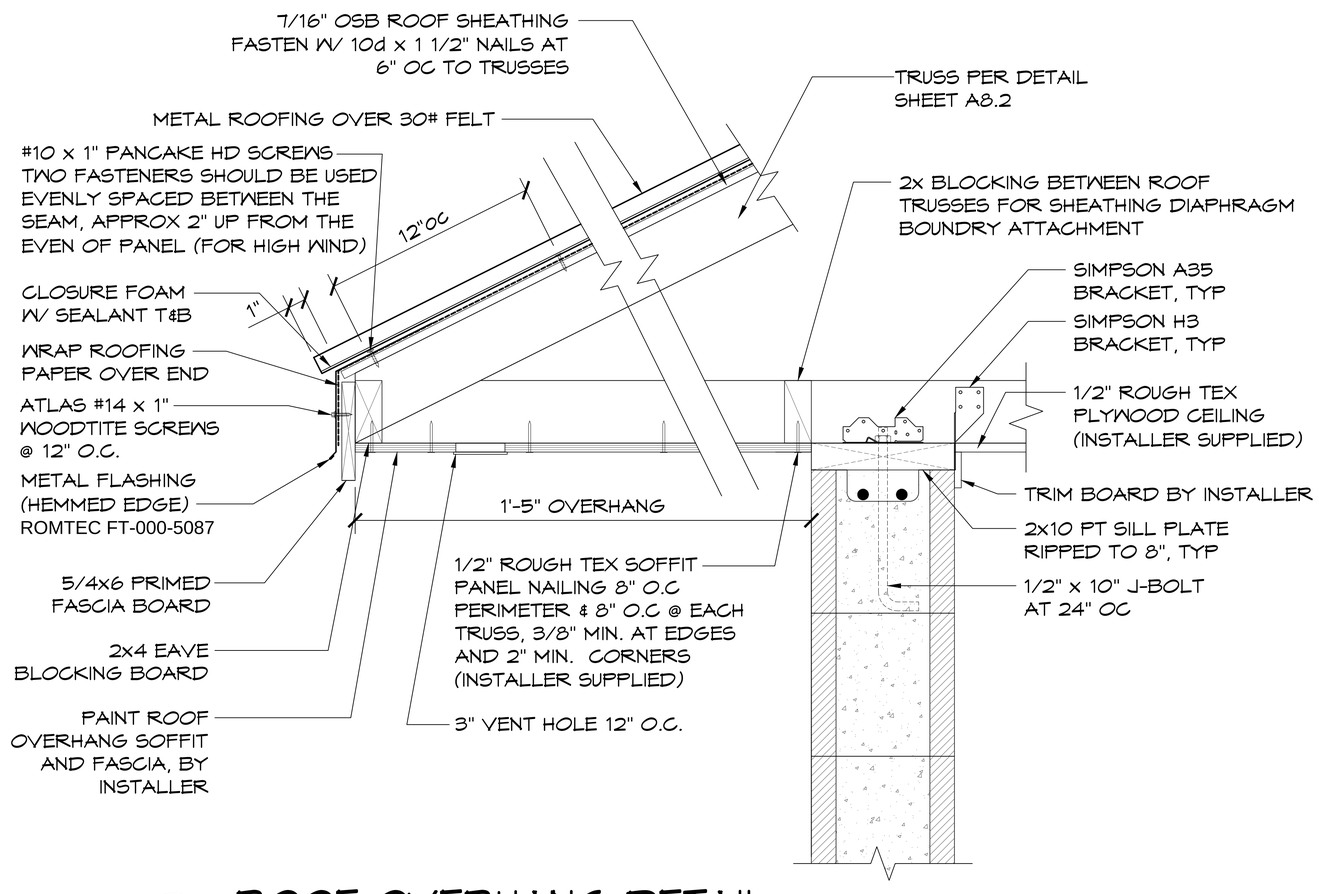

1 ROOF OVERHANG DETAIL

SCALE: 3" = 1'-0"

REV	DATE	BY	DESCRIPTION
1	01-25-16	RA	ENGINEER REVISIONS

3-28-16

REGISTERED PROFESSIONAL ENGINEER
CHRIS JACOBS
No. 74600
EXP. 12-16
CIVIL
STATE OF CALIFORNIA

© 2015 ROMTEC, INC. ALL RIGHTS RESERVED. THESE PLANS AND DRAWINGS MAY NOT BE REPRODUCED, ADAPTED OR FURTHER DISTRIBUTED, AND NO BUILDINGS MAY BE CONSTRUCTED FROM THESE PLANS, WITHOUT THE WRITTEN PERMISSION OF ROMTEC, INC.

Precision Structural Engineering, Inc.
www.psei@structure1.com
Western Regional Office
250 Main Klamath Falls, Oregon 97603
Phone: (541) 850-6300 Fax: (541) 850-6233
www.psei@structure1.com
ROMTEC: 216-23

ROMTEC
18240 NORTH BANK ROAD
ROSEBURG, OR 97470
(541)-496-3541 FAX (541)-496-0803

PROJECT: 2084 - SIERRA III MULTI-USER RESTROOM IN CONCESSION
WESTLAKE VILLAGE COMMUNITY PARK
31107 EAST THOUSAND OAKS BLVD
WESTLAKE VILLAGE, CALIFORNIA
APN 2056-001-014

SHEET TITLE:
ROOF CONNECTION DETAILS

PLAN SET# 18650
DATE: 12/09/2015
DRAWN BY: CR
SHEET NO. A8.3

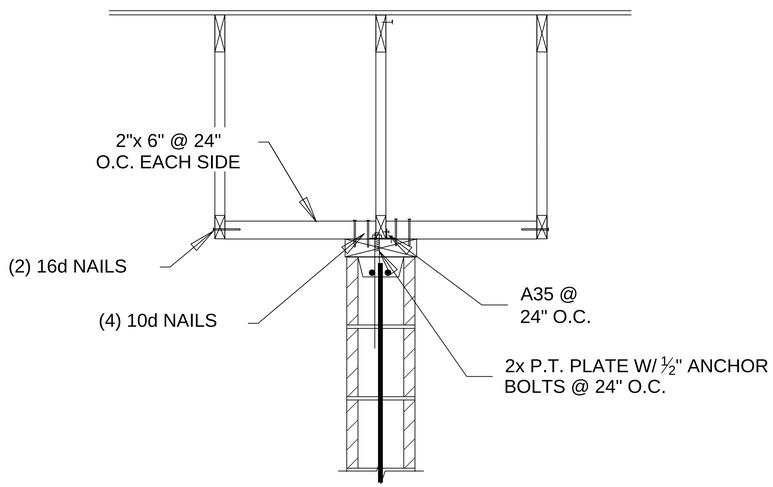

1 INTERIOR WALL ANCHORAGE

Scale: N.T.S.

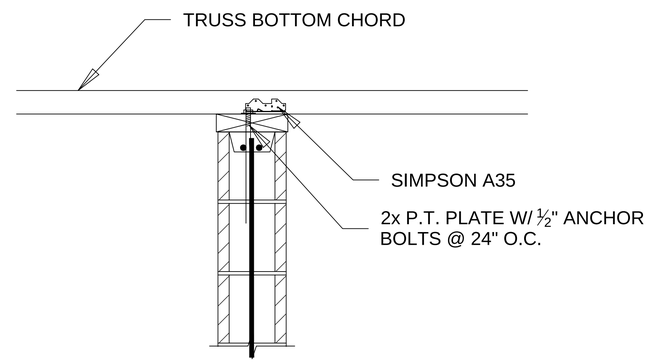

2 INTERIOR WALL ANCHORAGE

Scale: N.T.S.

© 2015 ROMTEC, INC. ALL RIGHTS RESERVED. THESE PLANS AND DRAWINGS MAY NOT BE REPRODUCED, ADAPTED OR FURTHER DISTRIBUTED, AND NO BUILDINGS MAY BE CONSTRUCTED FROM THESE PLANS, WITHOUT THE WRITTEN PERMISSION OF ROMTEC, INC.

REV	DATE	BY	DESCRIPTION
4	3/28/16	JS	ENGINEER REDLINES

3-28-16

REGISTERED PROFESSIONAL ENGINEER
CHRISTOPHER A. RAY
No. 74604
Exp. 12-16
CIVIL
STATE OF CALIFORNIA

Precision Structural Engineering, Inc.
www.psei@structure1.com
Western Regional Office
250 Main Klamath Falls, Oregon 97603
Phone: (541) 850-6300 Fax: (541) 850-6233
www.psei@structure1.com
ROMTEC 216-28

ROMTEC
18240 NORTH BANK ROAD
ROSEBURG, OR 97470
(541)-496-3541 FAX (541)-496-0803

© 2013 ROMTEC, INC. ALL RIGHTS RESERVED. THESE PLANS AND DRAWINGS MAY NOT BE REPRODUCED, ADAPTED OR FURTHER DISTRIBUTED, AND NO BUILDINGS MAY BE CONSTRUCTED FROM THESE PLANS, WITHOUT THE WRITTEN PERMISSION OF ROMTEC, INC.

PROJECT: 2084 - SIERRA III MULTI-USER RESTROOM IN CONCESSION
WESTLAKE VILLAGE COMMUNITY PARK
31107 EAST THOUSAND OAKS BLVD
WESTLAKE VILLAGE, CALIFORNIA
APN 2056-001-014

SHEET TITLE:
CONNECTION DETAILS

PLAN SET# 18650
DATE: 12/09/2015
DRAWN BY: CR
SHEET NO. A8.4

NOTE:
CONTRACTOR SHALL INSTALL SKYLIGHT IN STRICT ACCORDANCE WITH INSTALLATION REQUIREMENTS OF SKYLIGHT MANUFACTURER.

NOTE:
TESTED IN ACCORDANCE WITH ICBO-EVALUATION SERVICES, INC. ACCEPTANCE CRITERIA FOR SLOPED GLAZING IN SOLARIUMS, PATIO COVERS AND PREFABRICATED SKYLIGHTS. SEE NATIONAL EVALUATION SERVICE REPORT NO NER 216 AND ICBO-ES REPORT ER-6075.

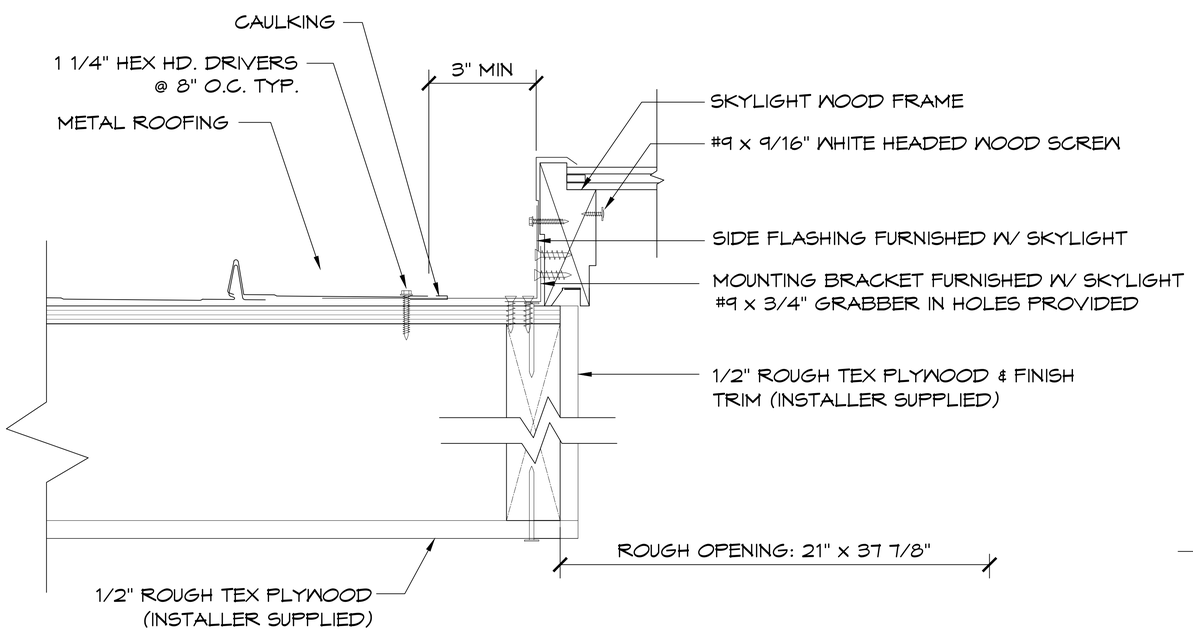

2 SKYLIGHT SECTION

SCALE: 6" = 1'-0"

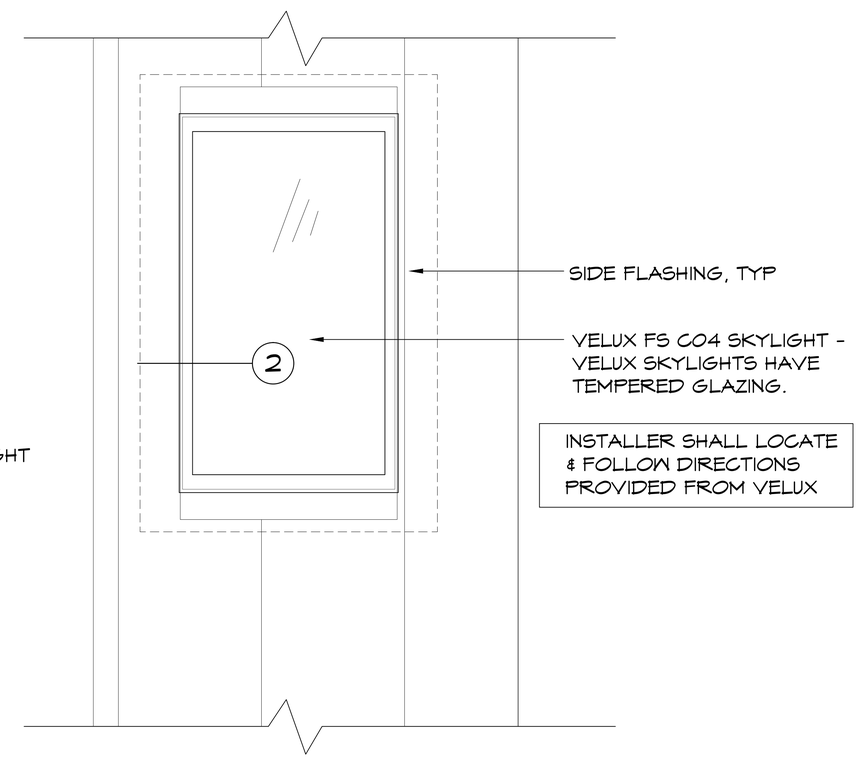

1 SKYLIGHT W/ INTEGRAL CURB & FLASHING DETAIL

SCALE: 1 1/2" = 1'-0"

REV	DATE	BY	DESCRIPTION
4	3/28/16	JS	ENGINEER REDLINES

3-28-16

REGISTERED PROFESSIONAL ENGINEER
C048806
EXP. 12-16
CIVIL
STATE OF CALIFORNIA

Precision Structural Engineering, Inc.
www.PrecisionSE.Com
Klamath Falls Office
250 Main Klamath Falls, Oregon 97603
Phone: (541) 850-0270 Fax: (541) 850-6233
www.info@precisionse.com
ROMTEC 216-23

ROMTEC
18240 NORTH BANK ROAD
ROSEBURG, OR 97470
(541)-496-3541 FAX (541)-496-0803

© 2013 ROMTEC, INC. ALL RIGHTS RESERVED. THESE PLANS AND DRAWINGS MAY NOT BE REPRODUCED, ADAPTED OR FURTHER DISTRIBUTED, AND NO BUILDINGS MAY BE CONSTRUCTED FROM THESE PLANS, WITHOUT THE WRITTEN PERMISSION OF ROMTEC, INC.

© 2015 ROMTEC, INC. ALL RIGHTS RESERVED. THESE PLANS AND DRAWINGS MAY NOT BE REPRODUCED, ADAPTED OR FURTHER DISTRIBUTED, AND NO BUILDINGS MAY BE CONSTRUCTED FROM THESE PLANS, WITHOUT THE WRITTEN PERMISSION OF ROMTEC, INC.

PROJECT: 2084 - SIERRA III MULTI-USER RESTROOM W/ CONCESSION
WESTLAKE VILLAGE COMMUNITY PARK
31107 EAST THOUSAND OAKS BLVD
WESTLAKE VILLAGE, CALIFORNIA
APN 2056-001-014

SHEET TITLE: SKYLIGHT DETAILS

PLAN SET# 18650
DATE: 12/09/2015
DRAWN BY: CR
SHEET NO. A8.5

FINISH SCHEDULE

NO.		DOORS	WALLS	FLOORS	COVE BASE	CEILINGS
1	CONCESSION AREA	POWDER COAT	FRP ON ALL WALLS (REFER TO DETAIL 1/A9.2)	SEALED CONCRETE	SLIM FOOT TOPSET S3619T	5/8" GREEN BOARD DRYWALL W/ EPOXY PAINT (INSTALLER SUPPLY)
2	MECH ROOM	POWDER COAT	EPOXY PAINT-ALL WALLS WITH 48" x 96" FRP PANEL-BEHIND MOP SINK.	SEALED CONCRETE	SLIM FOOT TOPSET S3619T	1/2" ROUGH TEX PLYWOOD (INSTALLER SUPPLY)
3	MEN'S RESTROOM	POWDER COAT	6X6 TILE UP TO 6'-3" & EPOXY PAINT ABOVE	SEALED CONCRETE	6" TILE COVE BASE	5/8" GREEN BOARD DRYWALL W/ EPOXY PAINT (INSTALLER SUPPLY)
4	WOMEN'S RESTROOM	POWDER COAT	6X6 TILE UP TO 6'-3" & EPOXY PAINT ABOVE	SEALED CONCRETE	6" TILE COVE BASE	5/8" GREEN BOARD DRYWALL W/ EPOXY PAINT (INSTALLER SUPPLY)
	ROOF SOFFITT & FASCIA					1/2" ROUGH TEX PLYWOOD FINISHED W/PAINT (INSTALLER SUPPLY)

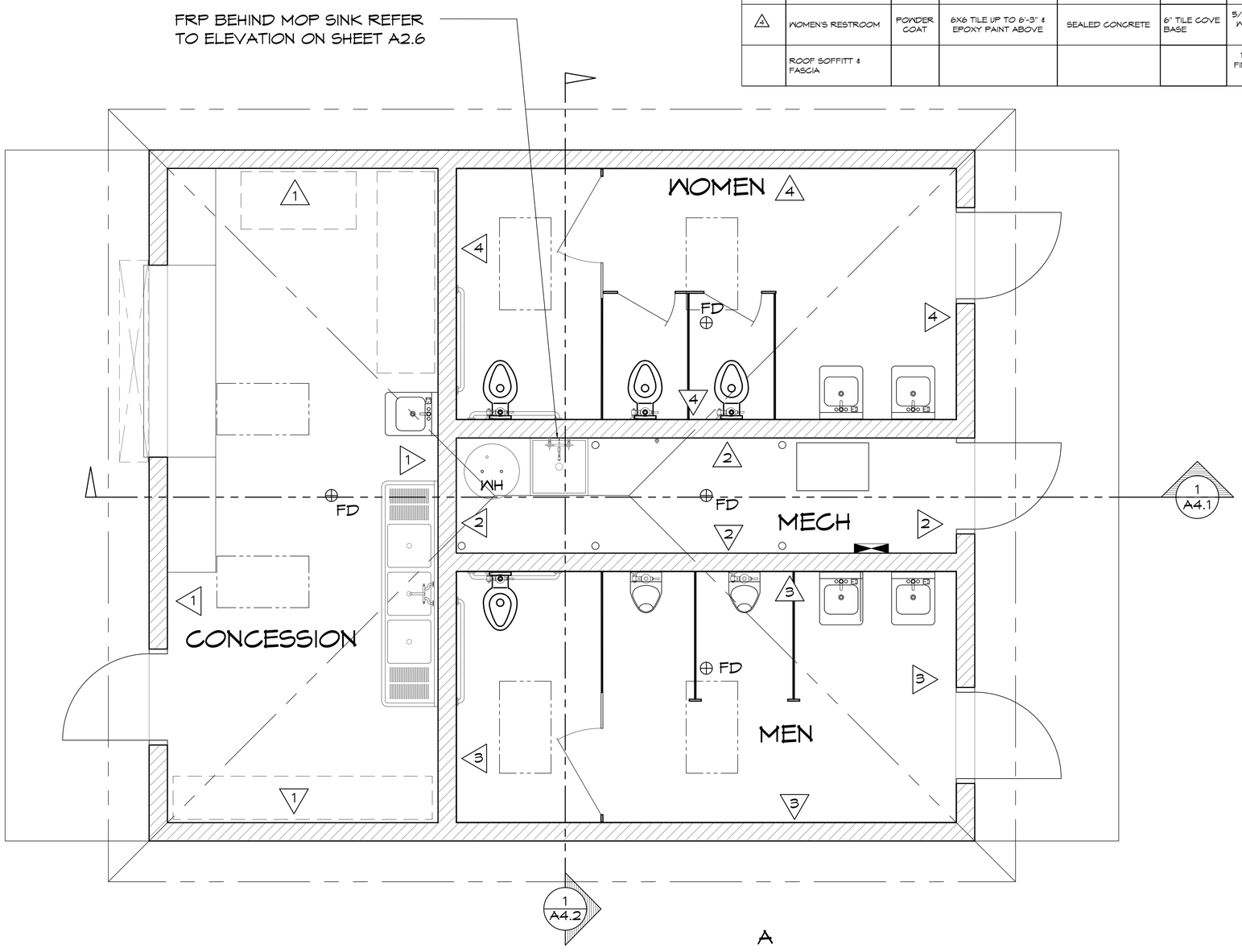

1 INTERIOR FINISH PLAN

SCALE: 1/2 = 1'-0"

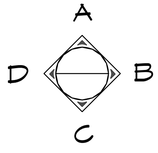

REV	DATE	BY	DESCRIPTION
1.	01-25-16	JB	ENGINEER REDLINES

3-28-16

REGISTERED PROFESSIONAL ENGINEER
CHRISTOPHER A. ROMTEC
EXP. 12-16
CIVIL
STATE OF CALIFORNIA

Precision Structural Engineering, Inc.
www.mtc@ensurum1.com
Klamath Falls, Oregon
250 Main Klamath Falls, Oregon 97603
Phone: (541) 850-8300 Fax: (541) 850-8233
www.info@structure9.com
ROMTEC 216-23

ROMTEC
18240 NORTH BANK ROAD
ROSEBURG, OR 97470
(541)-496-3541 FAX (541)-496-0803

© 2019 ROMTEC, INC. ALL RIGHTS RESERVED. THESE PLANS AND DRAWINGS MAY NOT BE REPRODUCED, ADAPTED OR FURTHER DISTRIBUTED, AND NO BUILDINGS MAY BE CONSTRUCTED FROM THESE PLANS, WITHOUT THE WRITTEN PERMISSION OF ROMTEC, INC.

© 2015 ROMTEC, INC. ALL RIGHTS RESERVED. THESE PLANS AND DRAWINGS MAY NOT BE REPRODUCED, ADAPTED OR FURTHER DISTRIBUTED, AND NO BUILDINGS MAY BE CONSTRUCTED FROM THESE PLANS, WITHOUT THE WRITTEN PERMISSION OF ROMTEC, INC.

PROJECT: 2094 - SIERRA III MULTI-USER RESTROOM W/ CONCESSION
WESTLAKE VILLAGE COMMUNITY PARK
31107 EAST THOUSAND OAKS BLVD
WESTLAKE VILLAGE, CALIFORNIA
APN 2056-001-014

SHEET TITLE:
INTERIOR WALL FINISH PLAN

PLAN SET# 18650

DATE: 12/09/2015

DRAWN BY: CR

SHEET NO. A9.1

FRP PANEL INSTALL DIAGRAM - NOT TO SCALE

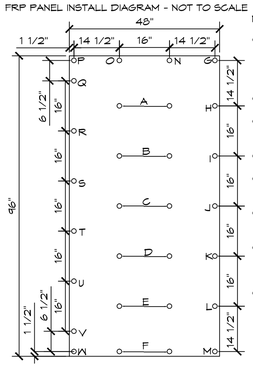

NOTES: FRP PANEL INSTALL

- TO AVOID BUBBLING IN THE FRP DURING INSTALL, ALWAYS FOLLOW THE ALPHABETIC SEQUENCE FROM THE MANUFACTURER (SEE DIAGRAM)
- LAMINATE ROLLER WILL HELP REMOVE ANY AIR POCKETS.
- DRILLED HOLES IN THE FRP MUST BE 1/8" LARGER IN DIAMETER THAN THE FASTENER.
- APPLY SILICONE SEALANT PRIOR TO INSERTING FASTENERS.
- ALLOW FOR EXPANSION, A 1/8" GAP IS TO BE LEFT INSIDE THE DIVISION BARS.
- REFER TO DETAILED INSTALLATION INSTRUCTIONS FROM THE MANUFACTURER.
- EACH 4'X8' SHEET REQUIRES 29 RIVETS PER LAYOUT SHOWN & ROMTEC PROVIDES 32 RIVETS PER FRP SHEET
- WHEN ADHESIVE IS APPLIED WITH A V-NOTCHED TROWEL (3/16" WIDE X 1/4" DEEP, SPACED 1/2" C.C.) 2/3 OF GALLON WILL BE NEEDED PER SHEET ROMTEC SUPPLIES ONE GALLON PER FRP SHEET

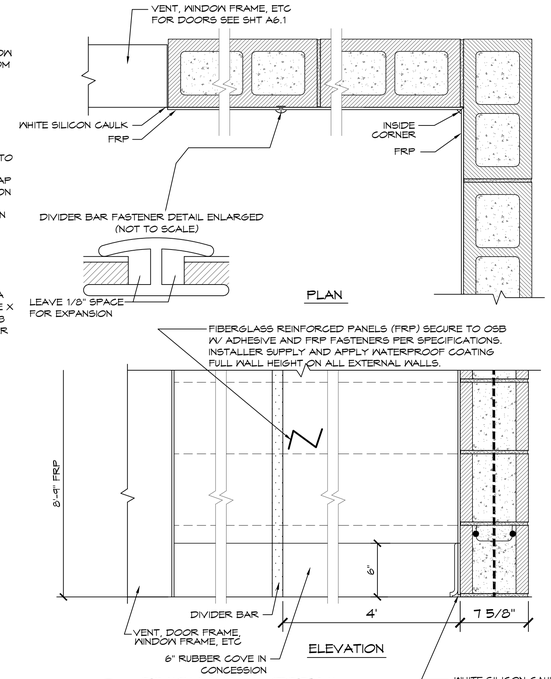

1 FINISH WALL DETAIL

SCALE: 1 1/2" = 1'-0"

REV	DATE	BY	DESCRIPTION
4	01-29-16	HA	ENGINEER REQUINES

3-28-16

REGISTERED PROFESSIONAL ENGINEER
CHRISTOPHER A. JOHNSON
No. 74270
EXP. 12-16
CIVIL
STATE OF CALIFORNIA

© 2015 ROMTEC, INC. ALL RIGHTS RESERVED. THESE PLANS AND DRAWINGS MAY NOT BE REPRODUCED, ADAPTED OR FURTHER DISTRIBUTED, AND NO BUILDINGS MAY BE CONSTRUCTED FROM THESE PLANS, WITHOUT THE WRITTEN PERMISSION OF ROMTEC, INC.

© 2015 ROMTEC, INC. ALL RIGHTS RESERVED. THESE PLANS AND DRAWINGS MAY NOT BE REPRODUCED, ADAPTED OR FURTHER DISTRIBUTED, AND NO BUILDINGS MAY BE CONSTRUCTED FROM THESE PLANS, WITHOUT THE WRITTEN PERMISSION OF ROMTEC, INC.

PROJECT: 2084 - SIERRA II MULTI-USER RESTROOM W/ CONCESSION

WESTLAKE VILLAGE COMMUNITY PARK
31107 EAST THOUSAND OAKS BLVD
WESTLAKE VILLAGE, CALIFORNIA
APN 2056-001-014

SHEET TITLE:
INTERIOR WALL FINISH DETAILS

ROMTEC
18240 NORTH BANK ROAD
ROSEBURG, OR 97470
(541)-496-3541 FAX (541)-496-0803

Precision Structural Engineering, Inc.
www.info@structure1.com
Klamath Falls Office
250 Main Street, Klamath Falls, Oregon 97603
Phone: (541) 850-6300 Fax: (541) 850-6233
www.info@structure1.com

ROMTEC 216-23

PLAN SET#	18650
DATE:	12/09/2015
DRAWN BY:	CR
SHEET NO.	A9.2

PLUMBING SCHEDULE

SYM	FIXTURE	SS	V	CW	HW	
WC-1	ADA TOILET	4"	2"	1 1/2"	--	ADA FIXTURE
UR-1	ADA URINAL	2"	1 1/2"	3/4"	--	ADA FIXTURE
LV-1	HAND SINK	1 1/2"	1 1/2"	1/2"	--	
LV-2	HAND SINK	1 1/2"	1 1/2"	1/2"	1/2"	
FD-1	FLOOR DRAIN	2"	1 1/2"	--	--	EMERGENCY
FD-2	FLOOR DRAIN	2"	1 1/2"	--	--	
HB-2	WALL HYDRANT	--	--	1/2"	--	
S-1	MOP SINK	2"	1 1/2"	1/2"	1/2"	EQUIPPED W/ATMOSPHERIC VACUUM BREAKER
S-3	TRIPLE SINK	2"	1 1/2"	1/2"	1/2"	
WH-1	WATER HEATER	--	--	1 1/4"	1 1/4"	AO SMITH DRE-52- 50 GALLON 9 KW

NOTE: PROVIDE CLEAN-OUT BENEATH ALL SINKS AND LAV'S AS REQUIRED BY CODE
CALIFORNIA NOTE: NON-GRIP FAUCET CONTROLS COMPLY WITH CBC CHAPTER 4

NOTE: ROMTEC BUILDINGS ARE DESIGNED TO HAVE 40-60 PSI WATER PRESSURE FOR THE PLUMBING FIXTURES. IF THE SITE HAS A PSI OTHER THAN THIS, IT IS THE OWNERS RESPONSIBILITY TO PROVIDE THE PRESSURE REDUCER OR BOOSTER PUMP NECESSARY.

*REFER TO THE FIXTURE CUT SHEET FOR ROUGH-IN MEASUREMENTS

CONTRACTOR TO PROVIDE TRAP PRIMING VALVE TO ALL FLOOR DRAINS

CONTRACTOR TO DESIGN A FIRE SPRINKLER SYSTEM FOR APPROVAL BY THE COUNTY OF LOS ANGELES SPRINKLER PLAN UNIT FOR REVIEW AND APPROVAL PRIOR TO INSTALLATION.

NOTE: 4" TOILET FLANGE BY JAY R. SMITH MFG. CO. M74 TO BE USED OR EQUIVALENT.

GENERAL PLUMBING NOTES:

1. ALL PIPE (WATER, SEWER, VENT), JOINTS, AND WORK SHALL CONFORM TO 2013 CALIFORNIA PLUMBING CODE AND LOCAL CODES.
2. CONTRACTOR TO CONFIRM LOCATIONS OF SEWER AND WATER TIE-INS.
3. CONTRACTOR TO SOLIDLY BRACE ALL PIPING TIGHT AGAINST WALLS. FOR LONG OR COMPLICATED RUNS, SECURELY MOUNT USING UNI-STRUT, IN STRAIGHT AND UNIFORM MANNER FOR FINISHED APPEARANCE. PIPING SHOWN IS DIAGRAMMATIC ONLY AND ACTUAL DESIGN BY CONTRACTOR.
4. CONTRACTOR RESPONSIBLE FOR PIPE SIZING AND SHALL PROVIDE ADEQUATE WATER PRESSURE TO ALL PLUMBING FIXTURES.
5. CONTRACTOR TO DETERMINE AND PROVIDE MEANS FOR DRAINING INTERIOR WATER AND SANITARY SEWER SYSTEMS, AS WELL AS SHUTOFF OF ALL FIXTURES
6. IF THE SITE REQUIRES AN ACCESSIBLE BACK FLOW PREVENTER AND/OR PRESSURE REDUCER OR BOOSTER PUMP IT IS THE OWNERS RESPONSIBILITY TO PROVIDE.
7. PLUMBING TO BE DRAINED BY GRAVITY TO SHUTOFF VALVE BOX .
8. WHEN INCLUDED HOT WATER TANKS REQUIRE A PRESSURE RELIEF VALVE AND A DRAIN LINE TO THE EXTERIOR OF THE BUILDING PER 2013 CPC SECTIONS 608.4 & 608.5. CONTRACTOR TO PROVIDE AND INSTALL TWO STRAPS TO THE NEAREST WALL, ONE STRAP AT TOP 1/3 OF TANK AND ONE STRAP AT BOTTOM 1/3 OF TANK, IN COMPLIANCE WITH 2012 UPC SECTION 508.2.
9. PLUMBING FIXTURES SHALL BE CERTIFIED BY THE CALIFORNIA ENERGY COMMISSION, SHALL COMPLY WITH 2013 CALIFORNIA PLUMBING CODE (CPC) SECTIONS 403 AND 408, AND SHALL COMPLY WITH 2013 CALIFORNIA GREEN BUILDING CODE (CGBC) SECTIONS 5.303.2 THRU 5.303.6. FLUSHOMETERS ASSOCIATED WITH TOILETS USE NO MORE THAN 1.28 GALLONS PER FLUSH. FLUSHOMETERS ASSOCIATED WITH URINALS USE NO MORE THAN 0.5 GALLONS PER FLUSH. BOTH FLUSHOMETERS ABOVE SHALL MEET PERFORMANCE STANDARDS BY ANSI A112.19.2 H&S CODE, SECTION 17921.3(B). SINK FAUCET WILL USE NO MORE THAN 1.8 GPM MEASURED AT 60 PSI.
10. WHEN FIXTURES REQUIRE WALL CARRIERS THE WALL CARRIER SHALL BE SUPPLIED BY CONTRACTOR.

REV	DATE	BY	DESCRIPTION
1	01-29-16	HB	ENGINEER REDLINES
2	3-2-2016	CK	BUILDING REVISION COMMENTS

3-28-16
REGISTERED PROFESSIONAL ENGINEER
CHRISTOPHER KNOX
No. 74215
EXP. 12-16
CIVIL
STATE OF CALIFORNIA

© 2015 ROMTEC, INC. ALL RIGHTS RESERVED. THESE PLANS AND DRAWINGS MAY NOT BE REPRODUCED, ADAPTED OR FURTHER DISTRIBUTED, AND NO BUILDINGS MAY BE CONSTRUCTED FROM THESE PLANS, WITHOUT THE WRITTEN PERMISSION OF ROMTEC, INC.

Precision Structural Engineering, Inc.
www@precisionstructural.com
Klamath Falls Office
250 Main Klamath Falls, Oregon 97603
Phone: (541) 882-5500 Fax: (541)804-0233
www.info@structure1.com
ROMTEC 216-23

ROMTEC
18240 NORTH BANK ROAD
ROSEBURG, OR 97470
(541)-496-3541 FAX (541)-496-0803

© 2015 ROMTEC, INC. ALL RIGHTS RESERVED. THESE PLANS AND DRAWINGS MAY NOT BE REPRODUCED, ADAPTED OR FURTHER DISTRIBUTED, AND NO BUILDINGS MAY BE CONSTRUCTED FROM THESE PLANS, WITHOUT THE WRITTEN PERMISSION OF ROMTEC, INC.

PROJECT: 2084 - SIERRA III MULTI-USER RESTROOM /V CONCESSION
WESTLAKE VILLAGE COMMUNITY PARK
31107 EAST THOUSAND OAKS BLVD
WESTLAKE VILLAGE, CALIFORNIA
APN 2056-001-014

SHEET TITLE:
PLUMBING SCHEDULE

PLAN SET#: 18650
DATE: 12/09/2015
DRAWN BY: CR
SHEET NO.: P1

PLUMBING LEGEND

—W—	COLD WATER
—MW—	MIXED WATER
—H—	HOT WATER
—SS—	SANITARY SEWER

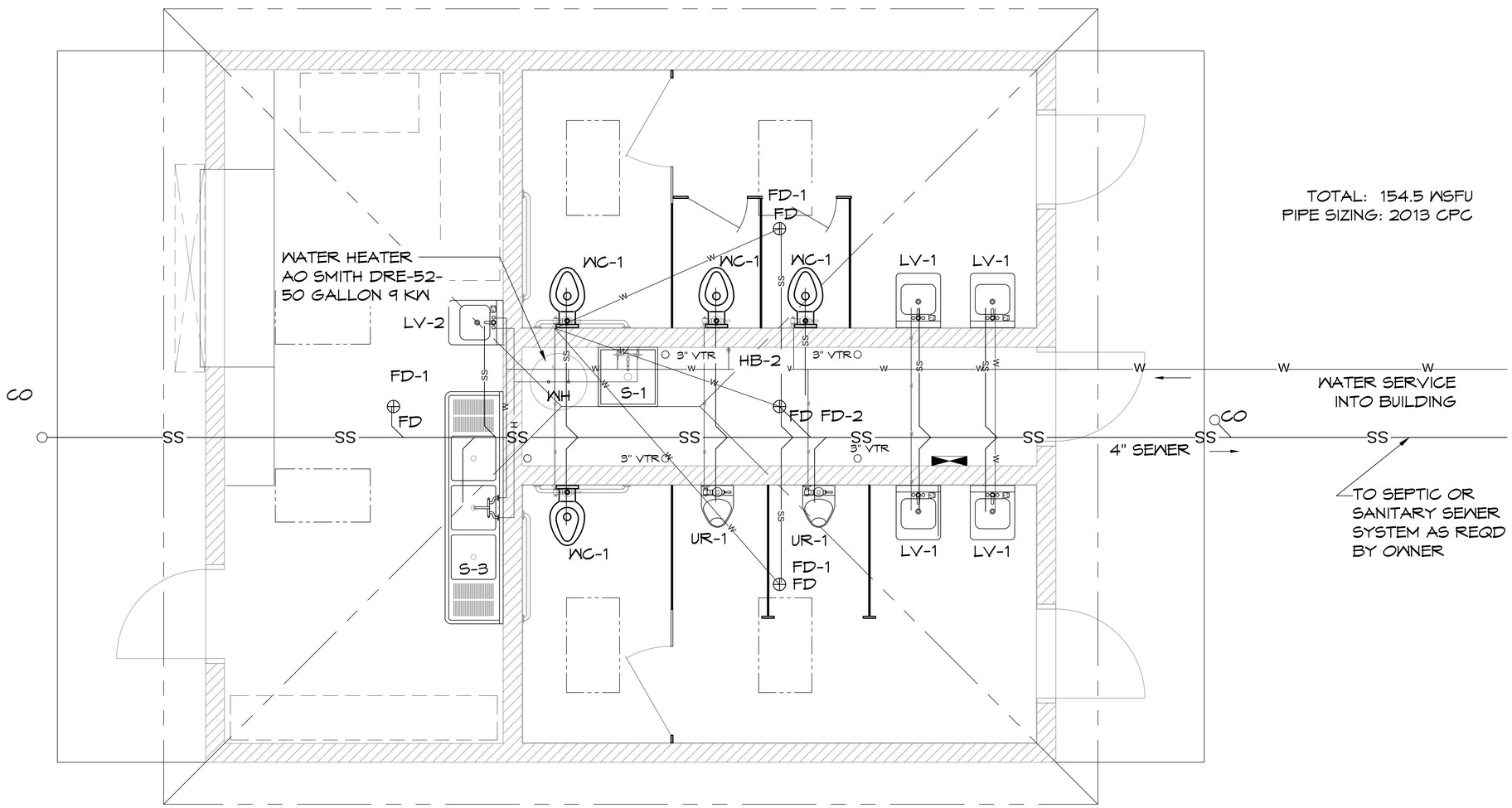

TOTAL: 154.5 WSFU
PIPE SIZING: 2013 CPC

1 PLUMBING PLAN

SCALE: 1/2" = 1'-0"

A B C D

REV.	DATE	BY	DESCRIPTION
1-2	3-28-16	GR	BUILDING REVIEW COMMENTS REVISIONS

3-28-16

REGISTERED PROFESSIONAL ENGINEER
CHRISTOPHER J. ROMTEC
No. 61810
EXP. 12-16
CIVIL
STATE OF CALIFORNIA

© 2015 ROMTEC, INC. ALL RIGHTS RESERVED. THESE PLANS AND DRAWINGS MAY NOT BE REPRODUCED, ADAPTED OR FURTHER DISTRIBUTED, AND NO BUILDINGS MAY BE CONSTRUCTED FROM THESE PLANS, WITHOUT THE WRITTEN PERMISSION OF ROMTEC, INC.

Precision Structural Engineering, Inc.
www.info@structure1.com
Klamath Falls, Oregon
250 Main Klamath Falls, Oregon 97603
Phone: (541) 850-6300 Fax: (541) 850-6233
www.info@structure1.com
ROMTEC 216-23

ROMTEC
18240 NORTH BANK ROAD
ROSEBURG, OR 97470
(541)-496-3541 FAX (541)-496-0803

© 2015 ROMTEC, INC. ALL RIGHTS RESERVED. THESE PLANS AND DRAWINGS MAY NOT BE REPRODUCED, ADAPTED OR FURTHER DISTRIBUTED, AND NO BUILDINGS MAY BE CONSTRUCTED FROM THESE PLANS, WITHOUT THE WRITTEN PERMISSION OF ROMTEC, INC.

PROJECT: 2084 - SIERRA III MULTI-USER RESTROOM W/ CONCESSION
WESTLAKE VILLAGE COMMUNITY PARK
31101 EAST THOUSAND OAKS BLVD
WESTLAKE VILLAGE, CALIFORNIA
APN 2056-001-014

SHEET TITLE: PLUMBING PLAN

PLAN SET# 18650

DATE: 12/09/2015

DRAWN BY: CR

SHEET NO. P2

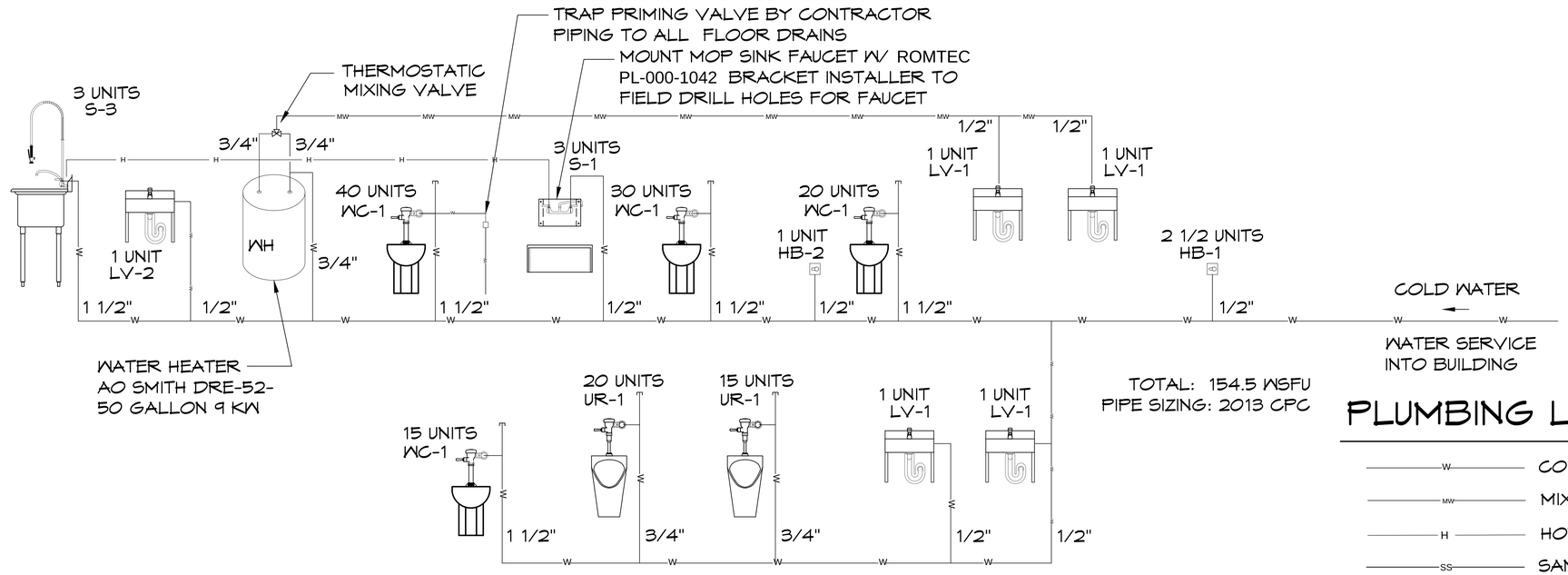

TOTAL: 154.5 WSFU
PIPE SIZING: 2013 CPC

PLUMBING LEGEND

W	COLD WATER
MW	MIXED WATER
H	HOT WATER
SS	SANITARY SEWER
V	VENT LINE

1 WATER SUPPLY RISER SCHEMATIC DIAGRAM

NOT TO SCALE

NOTE:
FIXTURES ARE SYMBOLIC ONLY
REFER TO SPECIFICATIONS AND
PRODUCT LITERATURE FOR
INSTALLATION DETAILS

NOTES:

1. WATER PIPE SIZE AND PRESSURE REQUIREMENTS MUST BE DETERMINED BY PLUMBING CONTRACTOR BASED ON LOCAL SUPPLY.
2. FIXTURE & FIXTURE CONNECTIONS ARE SYMBOLIC IN NATURE ONLY. REFER TO MANUFACTURER LITERATURE FOR EXACT FIXTURE SPECIFICATIONS.
3. ALL SANITARY AND DRAIN LINES SCHEDULE 40 PVC OR ABS.
4. ALL WATER LINES SHALL BE COPPER OR PER LOCAL CODE. NO JOINTS BENEATH THE SLAB.
5. WATER PIPE SIZING IS A MINIMUM SUGGESTION. PLUMBING CONTRACTOR WILL MAKE THE FINAL DETERMINATION.
6. ALL WATER AND SANITARY LINES SHALL HAVE FLEXIBLE JOINTS AT EXIT POINTS FROM THE BUILDING.
7. ALL FLOOR SINKS AND DRAINS SHALL HAVE TRAP PRIMERS AS NOTED IN PLANS, PER CPC 1007.0

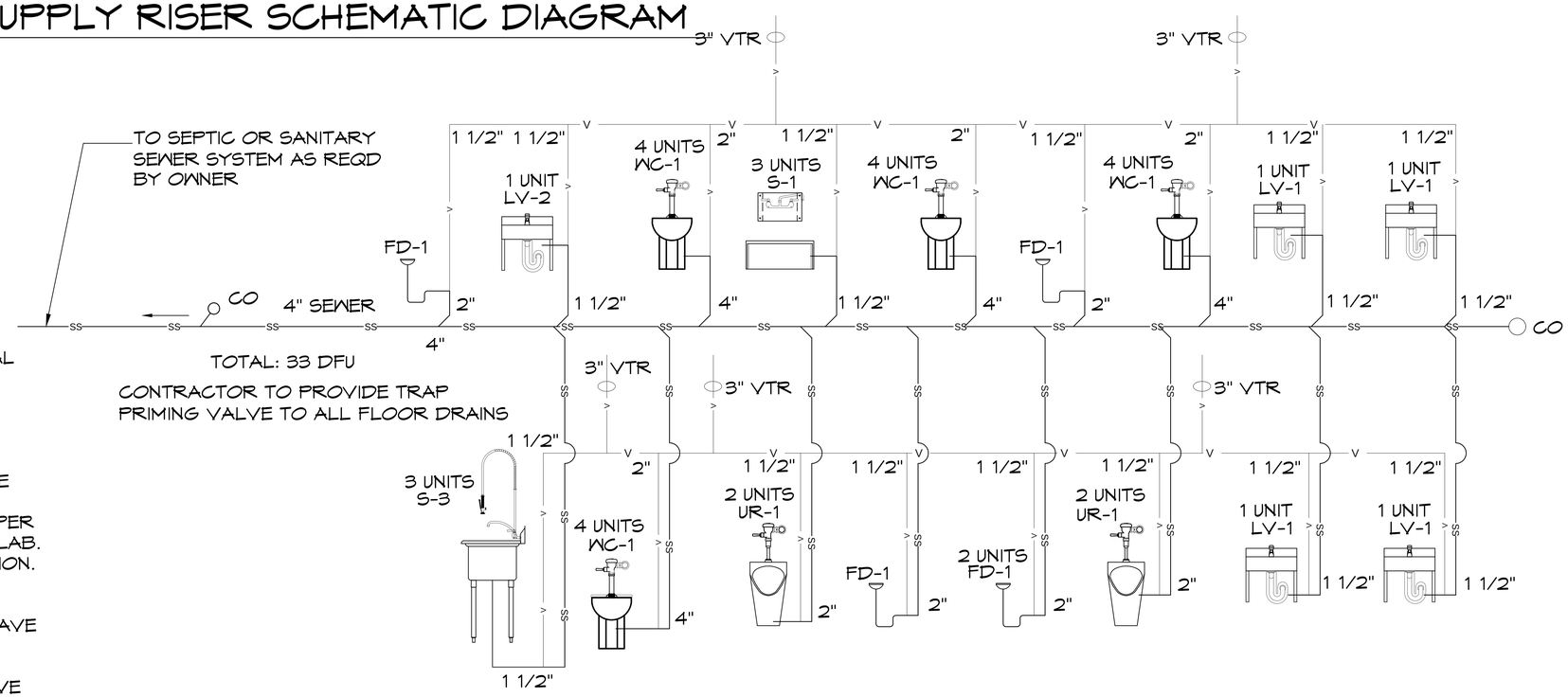

2 SANITARY SEWER RISER SCHEMATIC DIAGRAM

NOT TO SCALE

© 2015 ROMTEC, INC. ALL RIGHTS RESERVED. THESE PLANS AND DRAWINGS MAY NOT BE REPRODUCED, ADAPTED OR FURTHER DISTRIBUTED, AND NO BUILDINGS MAY BE CONSTRUCTED FROM THESE PLANS, WITHOUT THE WRITTEN PERMISSION OF ROMTEC, INC.

REV	DATE	BY	DESCRIPTION
1	01-29-16	AB	ENGINEER REDLINES
2	3/2/2016	GK	BUILDING REVIEW COMMENTS

3-28-16
REGISTERED PROFESSIONAL ENGINEER
CIVIL
STATE OF CALIFORNIA
EXP. 12-16

Precision Structural Engineering, Inc.
www.info@structus1.com
Structural Engineers
250 Main Klamath Falls, Oregon 97603
Phone: (541) 850-6300 Fax: (541) 850-6233
www.info@structure1.com
ROMTEC 216-23

ROMTEC
18240 NORTH BANK ROAD
ROSEBURG, OR 97470
(541)-496-3541 FAX (541)-496-0803

© 2015 ROMTEC, INC. ALL RIGHTS RESERVED. THESE PLANS AND DRAWINGS MAY NOT BE REPRODUCED, ADAPTED OR FURTHER DISTRIBUTED, AND NO BUILDINGS MAY BE CONSTRUCTED FROM THESE PLANS, WITHOUT THE WRITTEN PERMISSION OF ROMTEC, INC.

PROJECT: 2084 - SIERRA II MULTI-USER RESTROOM IV CONCESSION
WESTLAKE VILLAGE COMMUNITY PARK
31107 EAST THOUSAND OAKS BLVD
WESTLAKE VILLAGE, CALIFORNIA
APN 2056-001-014

SHEET TITLE:
PLUMBING RISER DIAGRAM

PLAN SET# 18650
DATE: 12/09/2015
DRAWN BY: CR
SHEET NO. P3

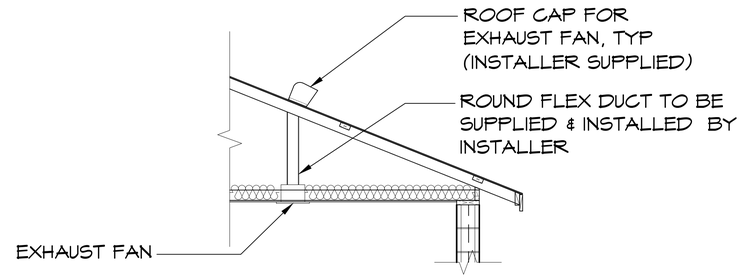

2 EXHAUST FAN SECTION

SCALE: N.T.S.

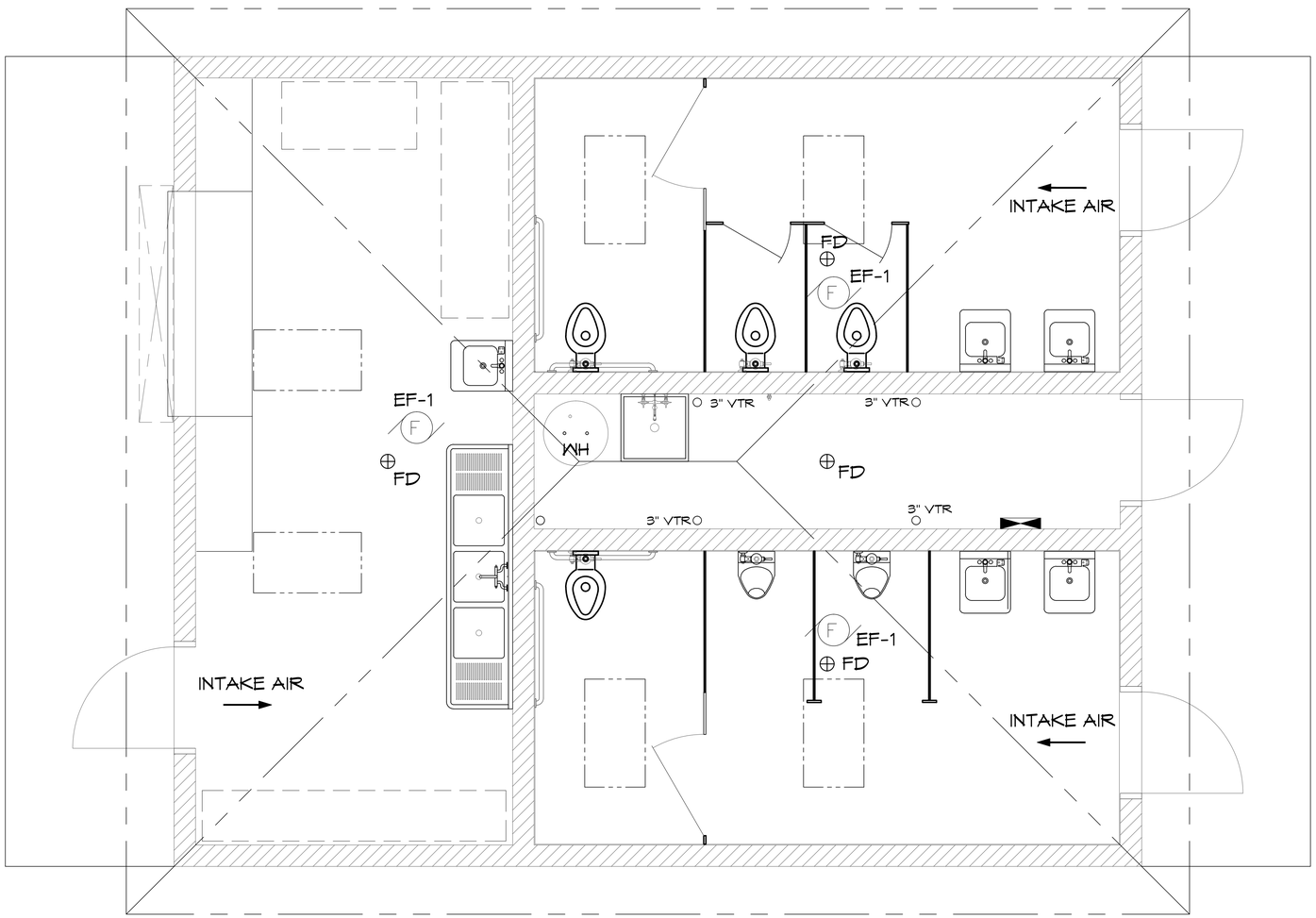

1 EXHAUST FAN PLAN

SCALE: 1/2" = 1'-0"

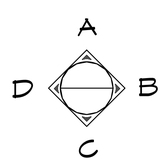

REV.	DATE	BY	DESCRIPTION
4	3/28/16	JS	ENGINEER REDLINES

3-28-16

REGISTERED PROFESSIONAL ENGINEER
CHRISTOPHER A. JOSEPH
No. C 061602
EXP. 12-16
CIVIL
STATE OF CALIFORNIA

© 2015 ROMTEC, INC. ALL RIGHTS RESERVED. THESE PLANS AND DRAWINGS MAY NOT BE REPRODUCED, ADAPTED OR FURTHER DISTRIBUTED, AND NO BUILDINGS MAY BE CONSTRUCTED FROM THESE PLANS, WITHOUT THE WRITTEN PERMISSION OF ROMTEC, INC.

Precision Structural Engineering, Inc.
www.info@structure1.com
Christopher A. Joseph
250 Main Klamath Falls, Oregon 97603
Phone: (541) 850-6300 Fax: (541) 850-6233
www.jhs@structure1.com
ROMTEC 216-23

ROMTEC
18240 NORTH BANK ROAD
ROSEBURG, OR 97470
(541)-496-3541 FAX (541)-496-0803

© 2019 ROMTEC, INC. ALL RIGHTS RESERVED. THESE PLANS AND DRAWINGS MAY NOT BE REPRODUCED, ADAPTED OR FURTHER DISTRIBUTED, NO BUILDINGS MAY BE CONSTRUCTED FROM THESE PLANS, WITHOUT THE WRITTEN PERMISSION OF ROMTEC, INC.

PROJECT: 2084 - SIERRA III MULTI-USER RESTROOM W/ CONCESSION
WESTLAKE VILLAGE COMMUNITY PARK
31107 EAST THOUSAND OAKS BLVD
WESTLAKE VILLAGE, CALIFORNIA
APN 2056-001-014

SHEET TITLE:
EXHAUST FAN PLAN

PLAN SET# 18650

DATE: 12/09/2015

DRAWN BY: CR

SHEET NO. M1

GENERAL ELECTRICAL NOTES:

1. ALL WORK SHALL COMPLY TO NATIONAL ELECTRICAL CODE, 2013 CALIFORNIA ELECTRICAL CODE, AND LOCAL CODES.
2. OWNER TO PROVIDE TEMPORARY POWER AS REQUIRED DURING COURSE OF CONSTRUCTION.
3. THE INSTALLER SHALL FURNISH & INSTALL SPECIFICATION GRADE CIRCUIT BREAKERS, WIRING, CONDUIT, GFI RECEPTACLES THROUGHOUT, SWITCHES, AND STAINLESS STEEL COVERPLATES.
4. ELECTRICAL CONDUIT IS TO BE RUN WITHIN THE WALL WHEN POSSIBLE, EXCEPT IN THE MECH ROOM.
5. FOR MECHANICAL ROOM ALL EXPOSED CONDUIT IS TO BE SURFACE MOUNTED AND RUN TIGHT TO CEILING AS REQD.
6. COORDINATE AC OUTLET HEIGHTS WITH OWNER PRIOR TO ROUGH-IN.

ELECTRICAL FIXTURE SCHEDULE:

BP	200 AMP MAIN BREAKER PANEL
LF-1	LIGHT FIXTURE, 42 WATT COMPACT FLUORESCENT
LF-2	48" FLUORESCENT LIGHT LITHONIA RB232-MV
F EF-1	(E) ELECTRIC EXHAUST FAN NU-TONE EXHAUST FAN 210CFM
	HOME RUN TO BREAKER PANEL
	110 VAC DUPLEX RECEPTACLE, GROUND FAULT PROTECTED MOUNTED A MIN OF 15" ABOVE THE FLOOR
C	110 VAC DUPLEX RECEPTACLE, GROUND FAULT PROTECTED MOUNTED ABOVE COUNTER
$	SWITCH, SINGLE POLE MOUNTED A MAX OF 48" ABOVE THE FLOOR
OS-1	OCCUPANCY SENSOR
AIR CURTAIN	AIR CURTAIN
P	POWER LOCKS
$A	DELAYED ACTION SWITCH (PUSH BUTTON) MOUNTED A MAX OF 48" ABOVE THE FLOOR
T	TIMER
EXIT X-1	BATTERY POWERED EMERGENCY EXIT LIGHT PROVIDE UNSWITCHED HOT WIRE TO BATTERY BACK UP THE POWER SUPPLY FOR MEANS OF EGRESS ILLUMINATION SHALL NORMALLY BE PROVIDED BY THE PREMISES ELECTRICAL SUPPLY. IN THE EVENT OF POWER SUPPLY FAILURE, THE EMERGENCY POWER SYSTEM SHALL PROVIDE POWER FOR A DURATION OF NOT LESS THAN 90 MINUTES AND SHALL CONSIST OF STORAGE BATTERIES, UNIT EQUIPMENT OR AN ON-SITE GENERATOR. (BUILDING CODE 1006.3)

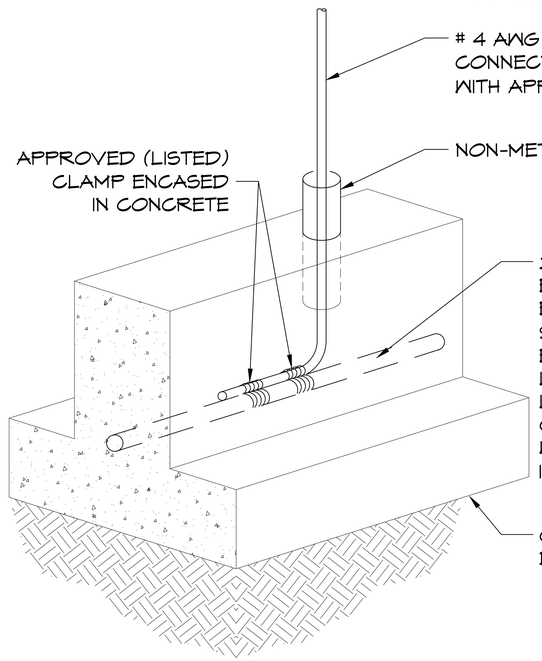

1 CONCRETE ENCASED SERVICE GROUND

SCALE: NONE

NOTE INSTALLATION OF GFI PROTECTED
OUTLETS WHERE APPROPRIATE

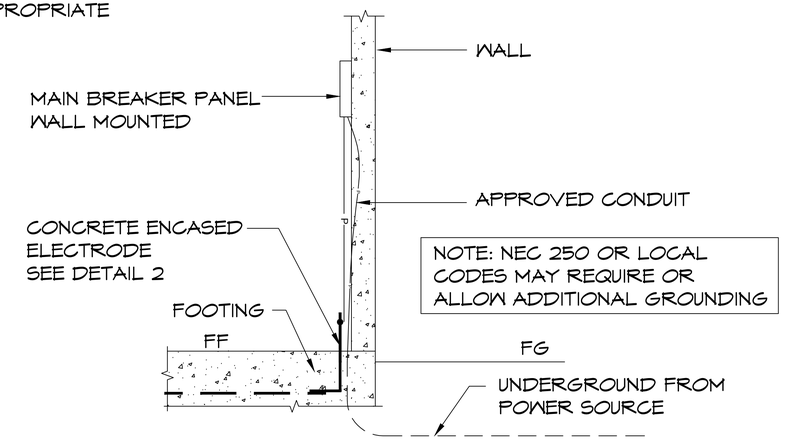

2 RISER DIAGRAM

SCALE: NONE

3-28-16

REGISTERED PROFESSIONAL ENGINEER
C48802
EXP. 12-16
CIVIL
STATE OF CALIFORNIA

REV	DATE	BY	DESCRIPTION

REGISTERED PROFESSIONAL ENGINEER
GREGORY L. PRUDE
E. 19431
ELECTRICAL
STATE OF CALIFORNIA
EXPIRES 3/31/2017

© 2015 ROMTEC, INC. ALL RIGHTS RESERVED. THESE PLANS AND DRAWINGS MAY NOT BE REPRODUCED, ADAPTED OR FURTHER DISTRIBUTED, AND NO BUILDINGS MAY BE CONSTRUCTED FROM THESE PLANS, WITHOUT THE WRITTEN PERMISSION OF ROMTEC, INC.

© 2015 ROMTEC, INC. ALL RIGHTS RESERVED. THESE PLANS AND DRAWINGS MAY NOT BE REPRODUCED, ADAPTED OR FURTHER DISTRIBUTED, AND NO BUILDINGS MAY BE CONSTRUCTED FROM THESE PLANS, WITHOUT THE WRITTEN PERMISSION OF ROMTEC, INC.

ROMTEC
18240 NORTH BANK ROAD
ROSEBURG, OR 97470
(541)496-3541 FAX (541)496-0803

PROJECT: 2084 - SIERRA III MULTI-USER RESTROOM W/ CONCESSION
WESTLAKE VILLAGE COMMUNITY PARK
31107 EAST THOUSAND OAKS BLVD
WESTLAKE VILLAGE, CALIFORNIA
APN 2056-001-014

SHEET TITLE: ELECTRICAL SCHEDULE

PLAN SET# 18650

DATE: 12/09/2015

DRAWN BY: CR

SHEET NO. E1

NOTE: CONDUITS OF ALL TYPES SHALL BE INSTALLED WITHIN THE WALLS AS PRACTICABLE. WHEN OTHERWISE INSTALLED, THEY SHALL BE MOUNTED OR ENCLOSED SO AS TO FACILITATE CLEANING

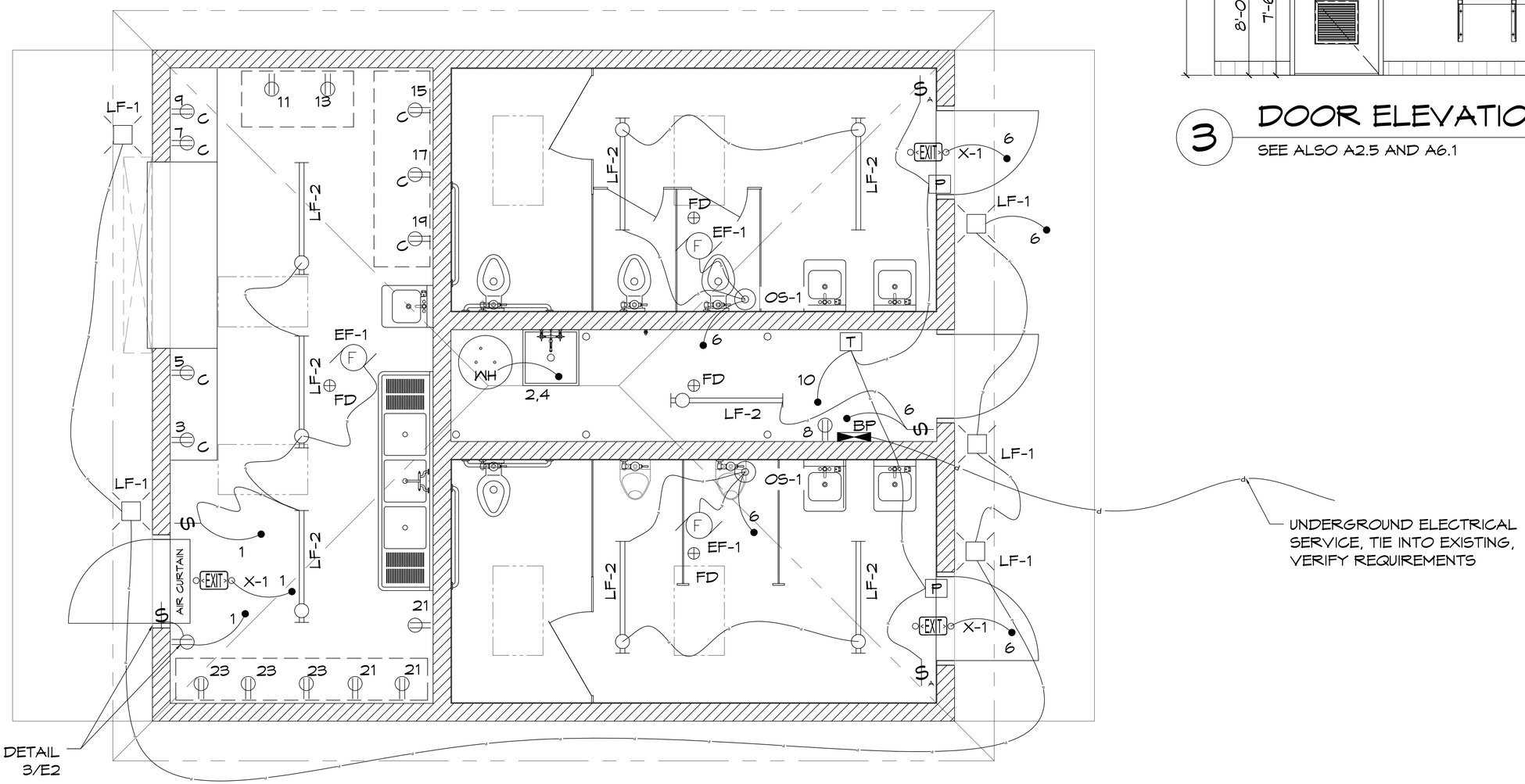

1 ELECTRICAL PLAN

SCALE: 1/2" = 1'-0"

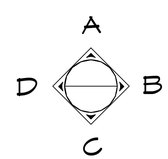

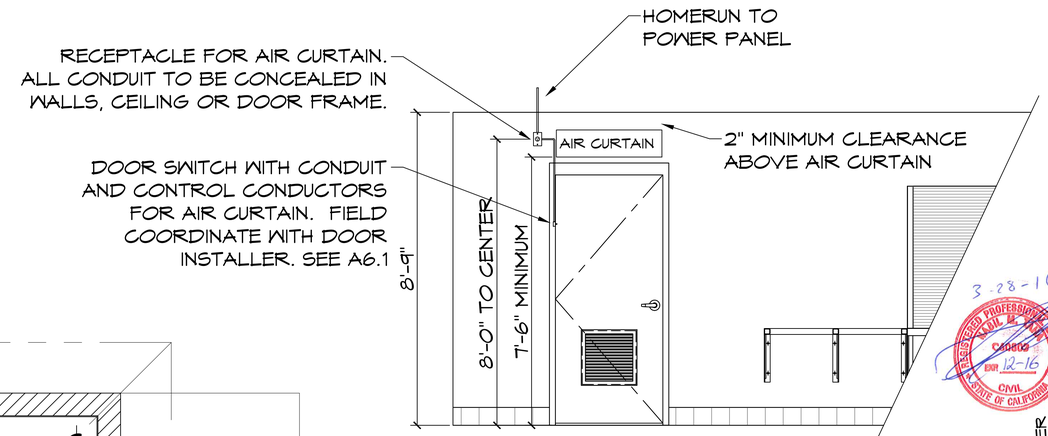

3 DOOR ELEVATION

SEE ALSO A2.5 AND A6.1

3-28-16

REGISTERED PROFESSIONAL ENGINEER GREGORY L. PRIDE C 58802 EXP. 12-16 CIVIL STATE OF CALIFORNIA

REV.	DATE	BY	DESCRIPTION

REGISTERED PROFESSIONAL ENGINEER GREGORY L. PRIDE E. 19431 ELECTRICAL STATE OF CALIFORNIA EXPIRES 3/31/2017

© 2015 ROMTEC, INC. ALL RIGHTS RESERVED. THESE PLANS AND DRAWINGS MAY NOT BE REPRODUCED, ADAPTED OR FURTHER DISTRIBUTED, AND NO BUILDINGS MAY BE CONSTRUCTED FROM THESE PLANS, WITHOUT THE WRITTEN PERMISSION OF ROMTEC, INC.

PROJECT: 2084 - SIERRA III MULTI-USER RESTROOM W/ CONCESSION
WESTLAKE VILLAGE COMMUNITY PARK
31107 EAST THOUSAND OAKS BLVD
WESTLAKE VILLAGE, CALIFORNIA
APN 2056-001-014

SHEET TITLE: ELECTRICAL PLAN

ROMTEC
18240 NORTH BANK ROAD
ROSEBURG, OR 97470
(541)-496-3541 FAX (541)-496-0803

© 2019 ROMTEC, INC. ALL RIGHTS RESERVED. THESE PLANS AND DRAWINGS MAY NOT BE REPRODUCED, ADAPTED OR FURTHER DISTRIBUTED, NO BUILDINGS MAY BE CONSTRUCTED FROM THESE PLANS, WITHOUT THE WRITTEN PERMISSION OF ROMTEC, INC.

PLAN SET# 18650

DATE: 12/09/2015

DRAWN BY: CR

SHEET NO. E2

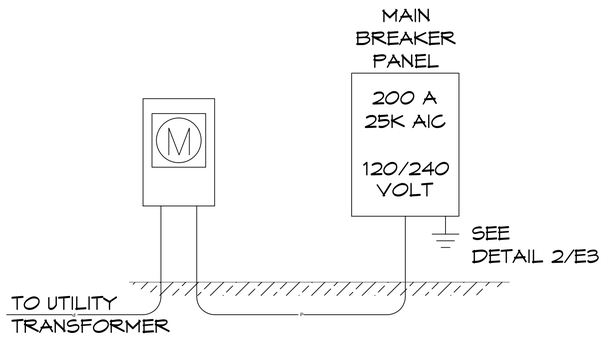

1 ONE-LINE DIAGRAM

SCALE: NONE

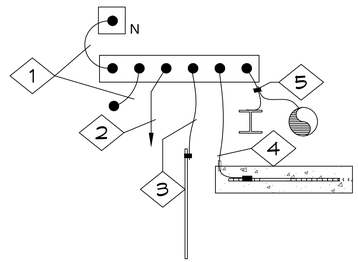

KEYED NOTES

1. #4 CU MAIN BONDING JUMPER AND EQUIPMENT BONDING JUMPER PER NEC 250.28(D) AND 250.102(C)
2. #4 CU GROUNDING ELECTRODE SYSTEM JUMPER PER NEC 250.52(A)(1,2 AND 4). SIZE GROUND RING CONNECTIONS PER 250.66(C)
3. #6 CU TO ROD, PIPE, OR PLATE ELECTRODES PER NEC 250.66(A)
4. #4 CU TO CONCRETE ENCASED ELECTRODE PER NEC 250.52(A)(3) AND 250.66(B)
5. WHERE REQUIRED, BOND PIPING SYSTEMS AND EXPOSED STRUCTURAL STEEL PER NEC 250.104

2 GROUNDING/BONDING DETAIL

SCALE: NONE

MAIN BREAKER PANEL

200 AMP MAIN BREAKER 120 / 240 VOLTS 1-PHASE, 3-WIRE

FEEDER SIZE 3# 3/0, 1# 6 GRD, 2" C SURFACE MOUNTED

LOAD DISTRIBUTION	LTG	REC	MOTOR	DATA	EXTG	HEAT		MISC	PH-A	PH-B	* TOTAL	AMPS	WITH SPARE	***
CONNECTED VA	1331	2880	0	0	0	9000		72	7163	6120	13283	60	16604	75
DIVERSITY FACTOR	125%	100%	100%	100%	65%	100%		100%						
DIVERSIFIED VA	1664	2880	0	0	0	9000		72	7496	6120	13616	62	17019	78

PL	T	LOAD	VA	HP	PHW	GND	CON	BKR		PH		BKR	CON	GND	PHW	HP	VA	LOAD	T	PL
1	L	LTG - CONCESSIONS	594		12	12	1/2	20	1	A	2	50	3/4	10	8		4500	WATER HEATER	H	2
3	R	RECEPTACLE	180		12	12	1/2	20	1	B							4500		H	4
5	R	RECEPTACLE	180		12	12	1/2	20	1	A	1	20	1/2	12	12		737	LIGHTS & EX FANS	L	6
7	R	RECEPTACLE	180		12	12	1/2	20	1	B	1	20	1/2	12	12		180	REC - STORAGE	R	8
9	R	RECEPTACLE	180		12	12	1/2	20	1	A	1	20	1/2	12	12		72	MAG LOCKS	O	10
11	R	RECEPTACLE	180		12	12	1/2	20	1	B										12
13	R	RECEPTACLE	180		12	12	1/2	20	1	A										14
15	R	RECEPTACLE	180		12	12	1/2	20	1	B										16
17	R	RECEPTACLE	180		12	12	1/2	20	1	A										18
19	R	RECEPTACLE	180		12	12	1/2	20	1	B										20
21	R	RECEPTACLE	540		12	12	1/2	20	1	A										22
23	R	RECEPTACLE	540		12	12	1/2	20	1	B										24
25										A										26
27										B										28
29										A										30
31										B										32
33										A										34
35										B										36
37										A										38
39										B										40

3/23/2016 GROUND & BOND PER NEC

3 ELECTRICAL PANEL SCHEDULE

REV	DATE	BY	DESCRIPTION

3-28-16

REGISTERED PROFESSIONAL ENGINEER GREGORY L. PRIDE C38802 EXP. 12-16 CIVIL STATE OF CALIFORNIA

REGISTERED PROFESSIONAL ENGINEER GREGORY L. PRIDE E. 19431 ELECTRICAL STATE OF CALIFORNIA EXPIRES 3/31/2017

© 2015 ROMTEC, INC. ALL RIGHTS RESERVED. THESE PLANS AND DRAWINGS MAY NOT BE REPRODUCED, ADAPTED OR FURTHER DISTRIBUTED, AND NO BUILDINGS MAY BE CONSTRUCTED FROM THESE PLANS, WITHOUT THE WRITTEN PERMISSION OF ROMTEC, INC.

© 2013 ROMTEC, INC. ALL RIGHTS RESERVED. THESE PLANS AND DRAWINGS MAY NOT BE REPRODUCED, ADAPTED OR FURTHER DISTRIBUTED, NO BUILDINGS MAY BE CONSTRUCTED FROM THESE PLANS, WITHOUT THE WRITTEN PERMISSION OF ROMTEC, INC.

ROMTEC
16240 NORTH BANK ROAD
ROSEBURG, OR 97470
(541)496-3541 FAX (541)496-0803

PROJECT: 2084 - SIERRA III MULTI-USER RESTROOM IV CONCESSION
WESTLAKE VILLAGE COMMUNITY PARK
31107 EAST THOUSAND OAKS BLVD
WESTLAKE VILLAGE, CALIFORNIA
APN 2056-001-014

SHEET TITLE:
ONE LINE DIAGRAM & DETAIL
ELECTRICAL PANEL

PLAN SET#: 18650

DATE: 12/09/2015

DRAWN BY: CR

SHEET NO. E3

BLOCK SUMMARY		
Count	NO	Name
683	18	18 8x16 Smooth Bond (Gray)
702	19	19 8x16 Smooth (Gray)
70	20	20 8x8 Smooth End (Gray)

RECYCLE

RECYCLE ALL USED SHIPPING MATERIALS AND LEFT OVER BUILDING MATERIALS

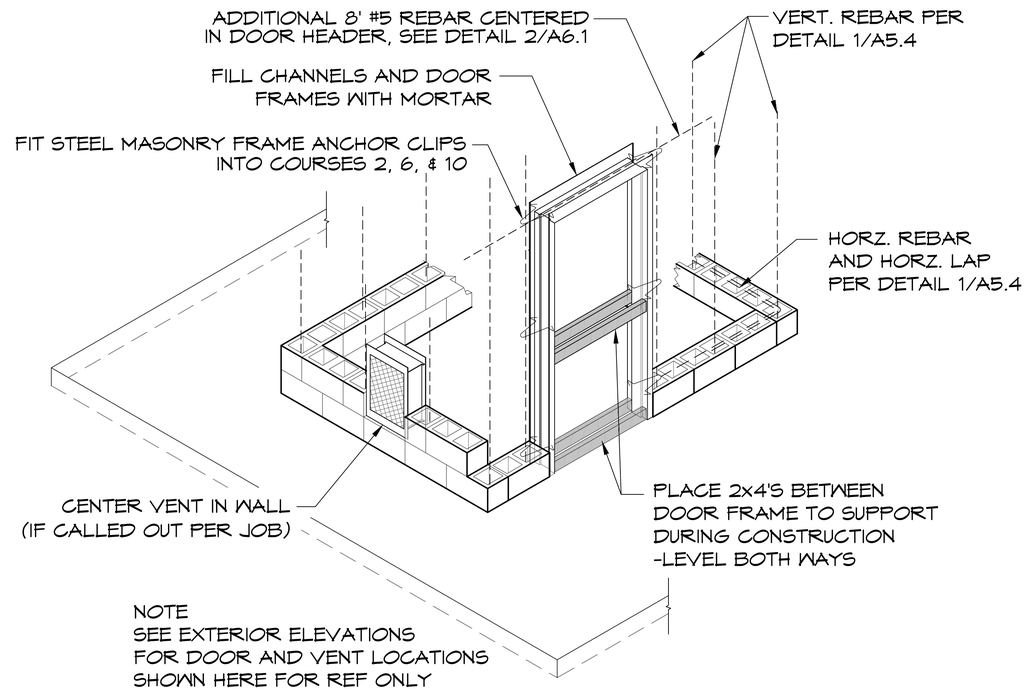

1 BLOCK INSTALLATION DETAIL

SCALE: 1/4" = 1'-0"

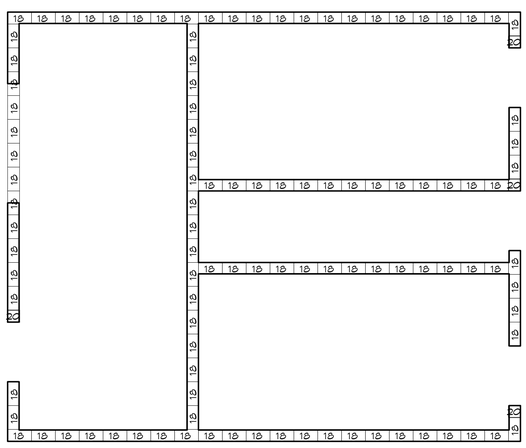

COURSE 1
BOND BEAM

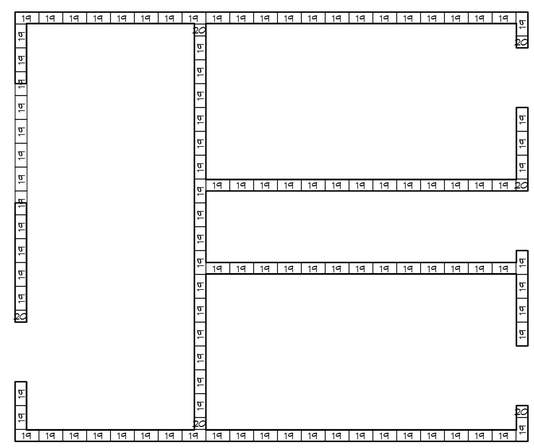

COURSE 2

© 2015 ROMTEC, INC. ALL RIGHTS RESERVED. THESE PLANS AND DRAWINGS MAY NOT BE REPRODUCED, ADAPTED OR FURTHER DISTRIBUTED, AND NO BUILDINGS MAY BE CONSTRUCTED FROM THESE PLANS, WITHOUT THE WRITTEN PERMISSION OF ROMTEC, INC.

REV	DATE	BY	DESCRIPTION
4	3/28/16	JS	ENGINEER REDLINES

3-28-16
REGISTERED PROFESSIONAL ENGINEER
CIVIL
STATE OF CALIFORNIA
EXP. 12-16

Precision Structural Engineering, Inc.
Klamath Falls Office
250 Main Klamath Falls, Oregon 97603
Phone: (541) 850-6300 Fax: (541) 850-6233
www.info@structure1.com
ROMTEC 216-23

ROMTEC
18240 NORTH BANK ROAD
ROSEBURG, OR 97470
(541)-496-3541 FAX (541)-496-0803

© 2013 ROMTEC, INC. ALL RIGHTS RESERVED. THESE PLANS AND DRAWINGS MAY NOT BE REPRODUCED, ADAPTED OR FURTHER DISTRIBUTED, AND NO BUILDINGS MAY BE CONSTRUCTED FROM THESE PLANS, WITHOUT THE WRITTEN PERMISSION OF ROMTEC, INC.

PROJECT: 2084 - SIERRA III MULTI-USER RESTROOM W/ CONCESSION
WESTLAKE VILLAGE COMMUNITY PARK
31107 EAST THOUSAND OAKS BLVD
WESTLAKE VILLAGE, CALIFORNIA
APN 2056-001-014

SHEET TITLE:
BLOCK PLAN

PLAN SET# 18650
DATE: 12/09/2015
DRAWN BY: CR
SHEET NO. B1

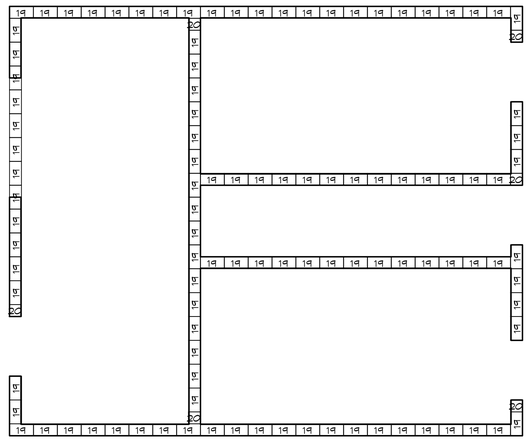

COURSE 3

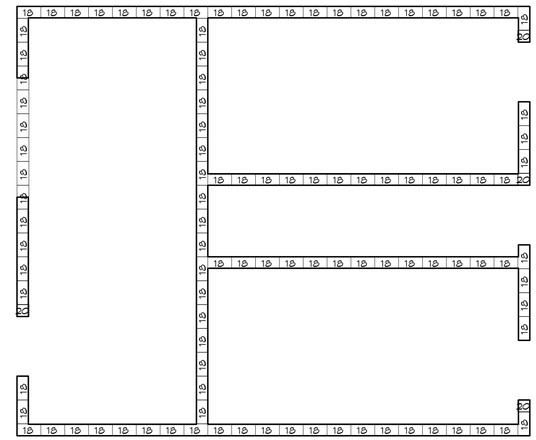

COURSE 4
BOND BEAM

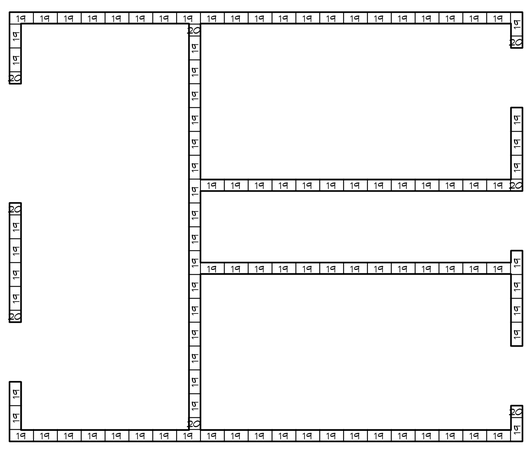

COURSE 5

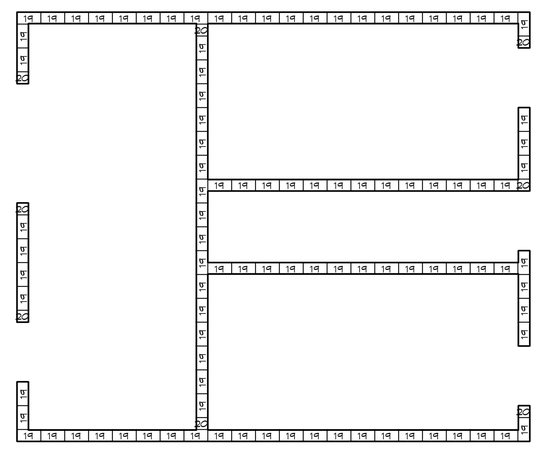

COURSE 6

© 2015 ROMTEC, INC. ALL RIGHTS RESERVED. THESE PLANS AND DRAWINGS MAY NOT BE REPRODUCED, ADAPTED OR FURTHER DISTRIBUTED, AND NO BUILDINGS MAY BE CONSTRUCTED FROM THESE PLANS, WITHOUT THE WRITTEN PERMISSION OF ROMTEC, INC.

REV	DATE	BY	DESCRIPTION
4	3/28/16	JS	ENGINEER REDLINES

3-28-16

REGISTERED PROFESSIONAL ENGINEER
CHRISTOPHER M. RAY
No. 72603
EXP. 12-16
CIVIL
STATE OF CALIFORNIA

ROMTEC
18240 NORTH BANK ROAD
ROSEBURG, OR 97470
(541)-496-3541 FAX (541)-496-0803

Precision Structural Engineering, Inc.
www.info@structure1.com
Klamath Falls, Oregon
250 Main Klamath Falls, Oregon 97603
Phone: (541) 850-6300 Fax: (541) 850-6233
www.info@structure1.com

ROMTEC 216/23

PROJECT: 2084 - SIERRA III MULTI-USER RESTROOM W/ CONCESSION
WESTLAKE VILLAGE COMMUNITY PARK
31107 EAST THOUSAND OAKS BLVD
WESTLAKE VILLAGE, CALIFORNIA
APN 2056-001-014

SHEET TITLE:
BLOCK PLAN

PLAN SET# 18650

DATE: 12/09/2015

DRAWN BY: CR

SHEET NO. B2

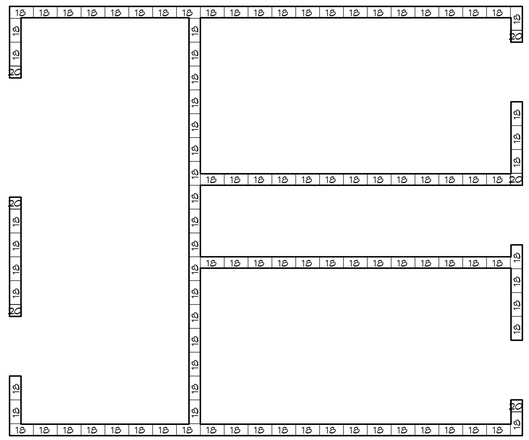

COURSE 7
BOND BEAM

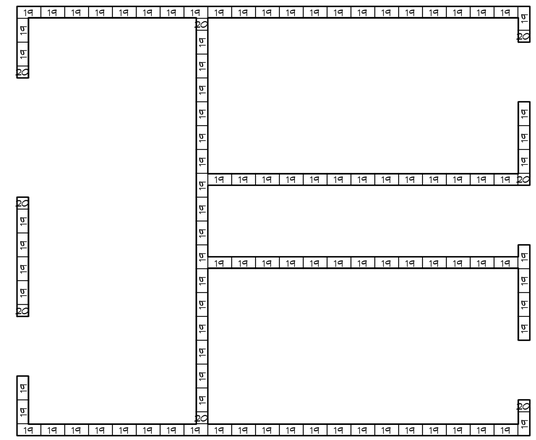

COURSE 8

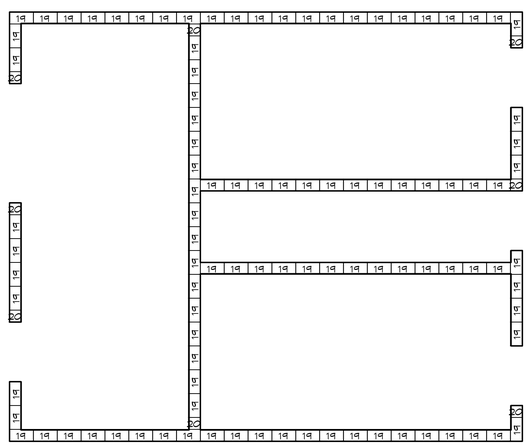

COURSE 9

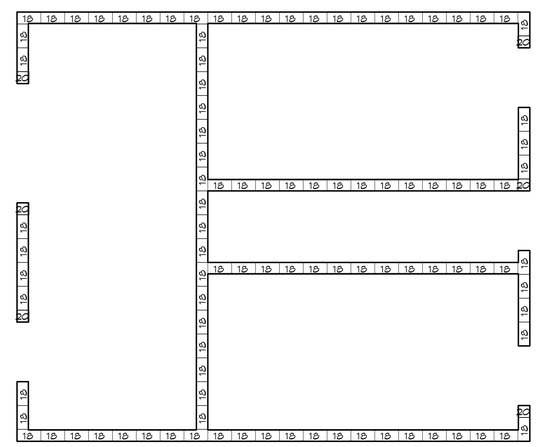

COURSE 10

© 2015 ROMTEC, INC. ALL RIGHTS RESERVED. THESE PLANS AND DRAWINGS MAY NOT BE REPRODUCED, ADAPTED OR FURTHER DISTRIBUTED, AND NO BUILDINGS MAY BE CONSTRUCTED FROM THESE PLANS, WITHOUT THE WRITTEN PERMISSION OF ROMTEC, INC.

REV	DATE	BY	DESCRIPTION
4	3-28-16	JS	ENGINEER REVISIONS

3-28-16

REGISTERED PROFESSIONAL ENGINEER
JAMIE A. SCHAFER
C048106
EXP. 12-16
CIVIL
STATE OF CALIFORNIA

ROMTEC
18240 NORTH BANK ROAD
ROSEBURG, OR 97470
(541)-496-3541 FAX (541)-496-0803

Precision Structural Engineering, Inc.
www.uniweb.net/~psi
Klamath Falls, Oregon
250 Main Klamath Falls, Oregon 97603
Phone: (541) 850-8300 Fax: (541) 850-8233
www.uniweb.net/~psi
ROMTEC 216-23

PROJECT: 2004 - SIERRA III MULTI-USER RESTROOM W/ CONCESSION
WESTLAKE VILLAGE COMMUNITY PARK
31107 EAST THOUSAND OAKS BLVD
WESTLAKE VILLAGE, CALIFORNIA
APN 2056-001-014

SHEET TITLE:
BLOCK PLAN

PLAN SET# 18650

DATE: 12/09/2015

DRAWN BY: CR

SHEET NO. B3

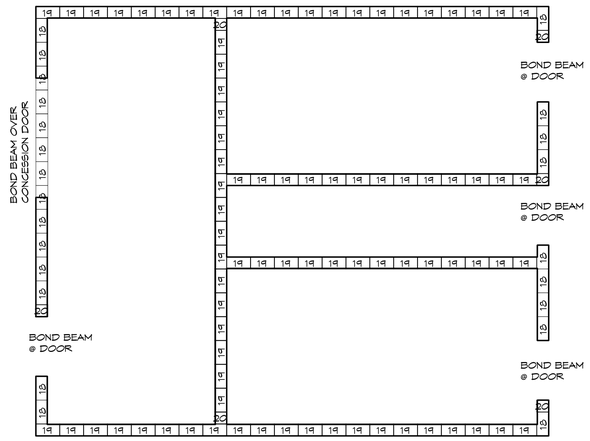

COURSE 11

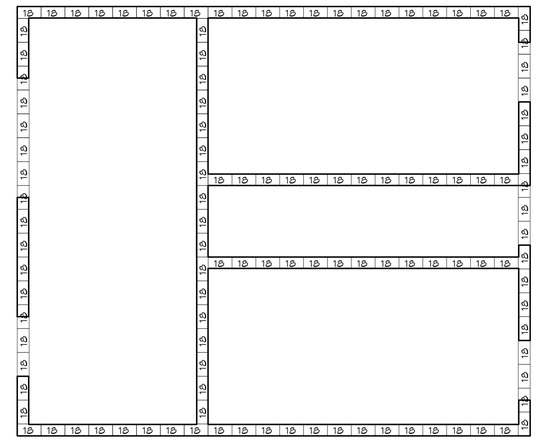

COURSE 12
BOND BEAM

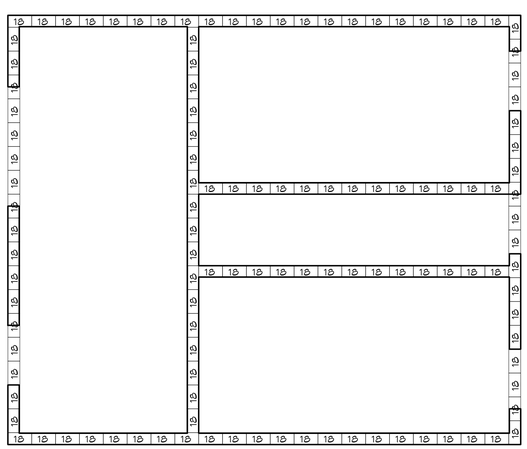

COURSE 13
BOND BEAM

© 2015 ROMTEC, INC. ALL RIGHTS RESERVED. THESE PLANS AND DRAWINGS MAY NOT BE REPRODUCED, ADAPTED OR FURTHER DISTRIBUTED, AND NO BUILDINGS MAY BE CONSTRUCTED FROM THESE PLANS, WITHOUT THE WRITTEN PERMISSION OF ROMTEC, INC.

REV	DATE	BY	DESCRIPTION
4	3/28/16	JS	ENGINEER REDLINES

REGISTERED PROFESSIONAL ENGINEER
CHRIS HOLT
No. 74000
EXP. 12-16
CIVIL
STATE OF CALIFORNIA

3-28-16

Precision Structural Engineering, Inc.
www.info@structure1.com
Klamath Falls Office
250 Main Klamath Falls, Oregon 97603
Phone: (541) 850-6300 Fax: (541) 850-6233
www.info@structure1.com
ROMTEC 216-23

ROMTEC
18240 NORTH BANK ROAD
ROSEBURG, OR 97470
(541)-496-3541 FAX (541)-496-0803

© 2019 ROMTEC, INC. ALL RIGHTS RESERVED. THESE PLANS AND DRAWINGS MAY NOT BE REPRODUCED, ADAPTED OR FURTHER DISTRIBUTED, AND NO BUILDINGS MAY BE CONSTRUCTED FROM THESE PLANS, WITHOUT THE WRITTEN PERMISSION OF ROMTEC, INC.

PROJECT: 2084 - SIERRA III MULTI-USER RESTROOM W/ CONCESSION
WESTLAKE VILLAGE COMMUNITY PARK
31107 EAST THOUSAND OAKS BLVD
WESTLAKE VILLAGE, CALIFORNIA
APN 2056-001-014

SHEET TITLE:
BLOCK PLAN

PLAN SET# 18650
DATE: 12/09/2015
DRAWN BY: CR
SHEET NO. B4

5.02 CALCULATIONS

If included in the proposal, structural calculations to follow once plans are sealed.

RAMONA LUMBER COMPANY INC.
P.O. BOX 1560
RAMONA CA, 92065
PH: 760-789-1080
FAX: 760-789-4958

RAMONA LOCATION 425 MAPLE STREET RAMONA CA 92065

RALPH@RAMONALUMBER.COM STACEY@RAMONALUMBER.COM

DATE 3/31/16

TRUSS ENGINEERING

COVER SHEET

JOB # 11475

NAME: WESTLAKE VILLAGE 3

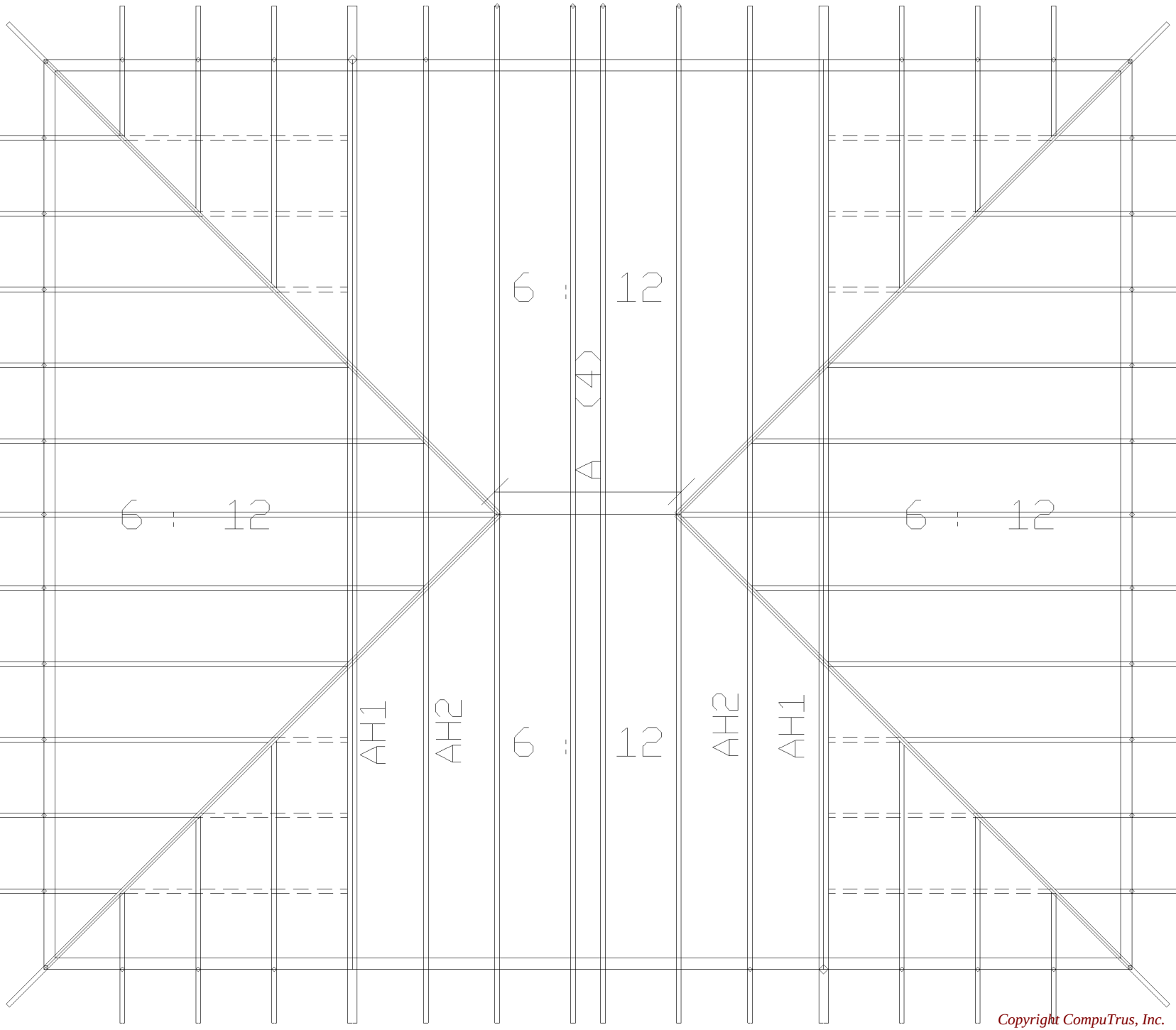

Copyright CompuTrus, Inc.

CompuTrus, Inc.

Above plan provided for truss placement only. Refer to truss calculation and engineering structural drawings for all further information. Building designer/engineer of record are responsible for all non truss to truss connections. Building designer/engineer of record to review and approve of all designs prior to construction.

Job #: 11475

For : ROMTEC INC.

Plan: 1

Elev: A

Name:
WESTLAKE VILLAGE 3

Address:

Drawn By:

Checked By:

Revised Dates:

This design prepared from computer input by
RAMONA LUMBER RT

LUMBER SPECIFICATIONS
TC: 2x4 DF #1&BTR
BC: 2x4 DF #1&BTR
WEBS: 2x4 DF STAND

TC LATERAL SUPPORT <= 12"OC. UON.
BC LATERAL SUPPORT <= 12"OC. UON.

Unbalanced live loads have been considered for this design.

TRUSS SPAN 26'- 8.0"
LOAD DURATION INCREASE = 1.25
SPACED 24.0" O.C.

LOADING
LL(20.0)+DL(14.0) ON TOP CHORD = 34.0 PSF
DL ON BOTTOM CHORD = 5.0 PSF
TOTAL LOAD = 39.0 PSF

BOTTOM CHORD CHECKED FOR A 20 PSF LIMITED STORAGE LIVE LOAD AT LOCATION(S) SPECIFIED BY CBC 2013. THE BOTTOM CHORD DEAD LOAD IS A MINIMUM OF 10 PSF.

CBC2013/IBC2012 MAX MEMBER FORCES 4WR/GDF/Cq=1.00

1- 2=	(-171)	0	1- 8=	(0)	180	2- 8=	(-274)	65	11- 6=	(-274)	63
2- 3=	(-198)	48	8- 9=	(-32)	1211	8- 3=	(-1392)	86			
3- 4=	(-1357)	169	9-10=	(0)	841	3- 9=	(-274)	102			
4- 5=	(-1357)	172	10-11=	(-36)	1211	9- 4=	(-45)	498			
5- 6=	(-198)	63	11- 7=	(-2)	180	4-10=	(-50)	498			
6- 7=	(-171)	10				10- 5=	(-274)	105			
						5-11=	(-1392)	61			

BEARING LOCATIONS	MAX VERT REACTIONS	MAX HORZ REACTIONS	BRG SIZE	REQUIRED BRG AREA SQ.IN.	(SPECIES)
1'- 4.0"	-93/ 1098V	-130/ 130H	3.50"	1.59	DF (625)
25'- 4.0"	-64/ 1098V	0/ 0H	3.50"	1.59	DF (625)

VERTICAL DEFLECTION LIMITS: LL=L/240, TL=L/180

MAX LL DEFL	= -0.003" @	0'- 0.0"	Allowed =	0.133"
MAX TL CREEP DEFL	= -0.006" @	0'- 0.0"	Allowed =	0.178"
MAX LL DEFL	= -0.036" @	8'- 8.0"	Allowed =	1.171"
MAX TL CREEP DEFL	= -0.096" @	18'- 0.0"	Allowed =	1.561"
MAX TL CREEP DEFL	= -0.006" @	26'- 8.0"	Allowed =	0.178"
MAX TC PANEL LL DEFL	= -0.004" @	25'- 7.3"	Allowed =	0.069"

MAX HORIZ. LL DEFL = 0.016" @ 25'- 0.5"
MAX HORIZ. TL DEFL = 0.032" @ 25'- 0.5"

Wind: 115 mph, h=15ft, TCDL=8.4,BCDL=3.0, ASCE 7-10, (All Heights), Enclosed, Cat.2, Exp.C, MWFRS(Dir), load duration factor=1.6, Truss designed for wind loads in the plane of the truss only.

Max CSI: TC:0.43 BC:0.47 Web:0.98

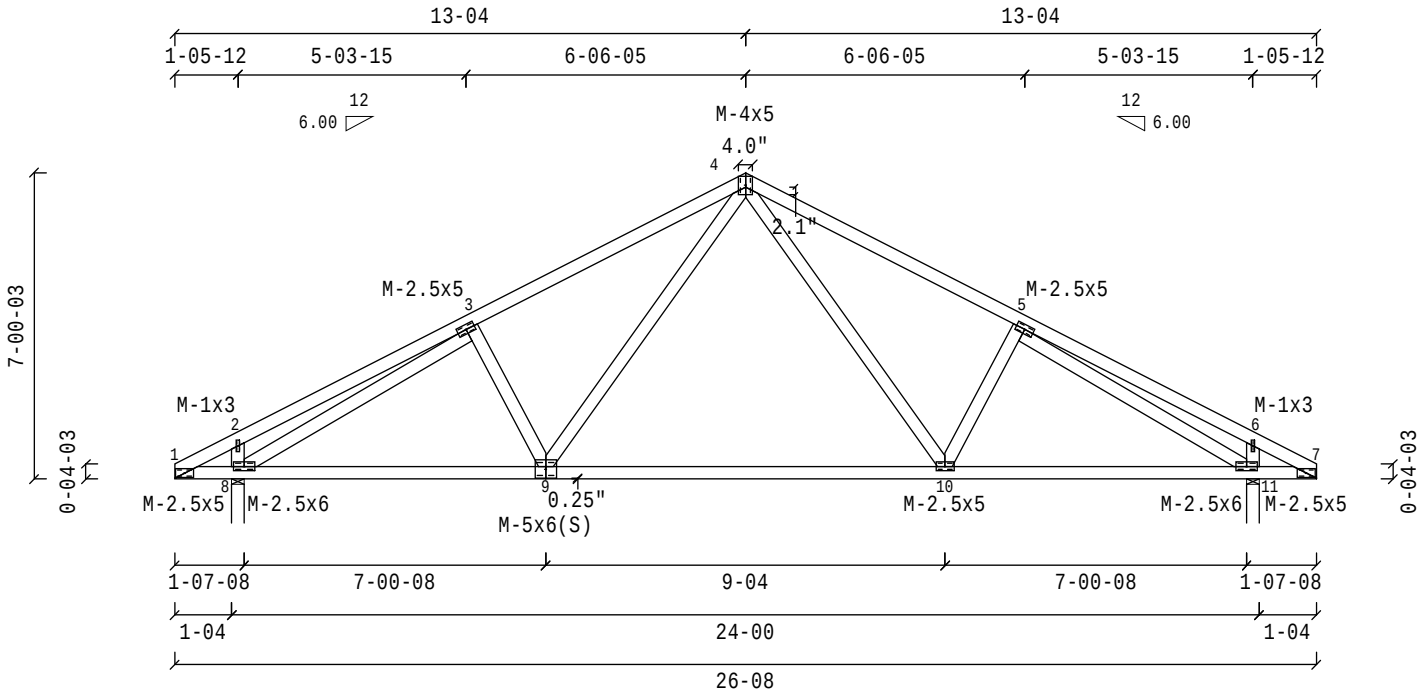

JOB NAME: WESTLAKE VILLAGE 3 - A

Scale: 0.2143

Truss: A

DES. BY: AM
DATE: 3/31/2016
SEQ.: 6380035
TRANS ID: 435127

WARNINGS:
1. Builder and erection contractor should be advised of all General Notes and Warnings before construction commences.
2. 2x4 compression web bracing must be installed where shown +.
3. Additional temporary bracing to insure stability during construction is the responsibility of the erector. Additional permanent bracing of the overall structure is the responsibility of the building designer.
4. No load should be applied to any component until after all bracing and fasteners are complete and at no time should any loads greater than design loads be applied to any component.
5. CompuTrus has no control over and assumes no responsibility for the fabrication, handling, shipment and installation of components.
6. This design is furnished subject to the limitations set forth by TPI/WTCA in BCSI, copies of which will be furnished upon request.

MiTek USA, Inc./CompuTrus Software +7.6.8-SP2(1L)-E

GENERAL NOTES, unless otherwise noted:
1. This design is based only upon the parameters shown and is for an individual building component. Applicability of design parameters and proper incorporation of component is the responsibility of the building designer.
2. Design assumes the top and bottom chords to be laterally braced at 2' o.c. and at 10' o.c. respectively unless braced throughout their length by continuous sheathing such as plywood sheathing(TC) and/or drywall(BC).
3. 2x Impact bridging or lateral bracing required where shown + +
4. Installation of truss is the responsibility of the respective contractor.
5. Design assumes trusses are to be used in a non-corrosive environment, and are for "dry condition" of use.
6. Design assumes full bearing at all supports shown. Shim or wedge if necessary.
7. Design assumes adequate drainage is provided.
8. Plates shall be located on both faces of truss, and placed so their center lines coincide with joint center lines.
9. Digits indicate size of plate in inches.
10. For basic connector plate design values see ESR-1311, ESR-1988 (MiTek)

REGISTERED PROFESSIONAL ENGINEER
MARK PAUL RIVERA
C 66864
EXP. 09/30/2016
3/31/16
CIVIL
STATE OF CALIFORNIA

This design prepared from computer input by
RAMONA LUMBER RT

LUMBER SPECIFICATIONS
TC: 2x4 DF #1&BTR
BC: 2x4 DF #1&BTR
WEBS: 2x4 DF STAND

TC LATERAL SUPPORT <= 12"OC. UON.
BC LATERAL SUPPORT <= 12"OC. UON.

==========
NOTE: 2x4 BRACING AT 24"OC UON. FOR
ALL FLAT TOP CHORD AREAS NOT SHEATHED
==========

Unbalanced live loads have been
considered for this design.

TRUSS SPAN 26'- 8.0"
LOAD DURATION INCREASE = 1.25
SPACED 24.0" O.C.

LOADING
LL(20.0)+DL(14.0) ON TOP CHORD = 34.0 PSF
DL ON BOTTOM CHORD = 5.0 PSF
TOTAL LOAD = 39.0 PSF

LIMITED STORAGE DOES NOT APPLY DUE TO THE SPATIAL
REQUIREMENTS OF CBC 2013 NOT BEING MET.

BOTTOM CHORD CHECKED FOR 10PSF LIVE LOAD. TOP
AND BOTTOM CHORD LIVE LOADS ACT NON-CONCURRENTLY.

CBC2013/IBC2012 MAX MEMBER FORCES 4WR/GDF/Cq=1.00

1- 2=(-86) 43	1-12=(-10) 84	2-12=(-183) 45
2- 3=(-93) 64	12-13=(-106) 1032	12- 3=(-1296) 201
3- 4=(-1227) 215	13-14=(-135) 1219	3-13=(-13) 104
4- 5=(0) 0	14-15=(-114) 1032	13- 4=(-15) 273
4- 6=(-1041) 206	15-11=(-10) 84	13- 6=(-262) 82
6- 8=(-1041) 208		6-14=(-262) 82
7- 8=(0) 0		8-14=(-16) 273
8- 9=(-1227) 217		14- 9=(-13) 104
9-10=(-93) 64		9-15=(-1296) 178
10-11=(-86) 43		15-10=(-183) 43

BEARING LOCATIONS	MAX VERT REACTIONS	MAX HORZ REACTIONS	BRG SIZE	REQUIRED BRG AREA SQ.IN.	(SPECIES)
1'- 4.0"	-147/ 1042V	-88/ 88H	3.50"	1.51	DF (625)
25'- 4.0"	-118/ 1042V	0/ 0H	3.50"	1.51	DF (625)

VERTICAL DEFLECTION LIMITS: LL=L/240, TL=L/180
MAX LL DEFL = -0.037" @ 13'- 4.0" Allowed = 1.171"
MAX TL CREEP DEFL = -0.088" @ 13'- 4.0" Allowed = 1.561"
MAX BC PANEL LL DEFL = 0.002" @ 0'- 0.0" Allowed = 0.053"
MAX BC PANEL TL DEFL = 0.002" @ 0'- 8.9" Allowed = 0.070"
MAX TC PANEL LL DEFL = 0.008" @ 26'- 3.1" Allowed = 0.069"
MAX TC PANEL TL DEFL = 0.018" @ 26'- 0.2" Allowed = 0.103"

MAX HORIZ. LL DEFL = 0.017" @ 25'- 0.5"
MAX HORIZ. TL DEFL = 0.033" @ 25'- 0.5"

Wind: 115 mph, h=15ft, TCDL=8.4,BCDL=3.0, ASCE 7-10,
(All Heights), Enclosed, Cat.2, Exp.C, MWFRS(Dir),
load duration factor=1.6,
Truss designed for wind loads
in the plane of the truss only.

Max CSI: TC:0.21 BC:0.36 Web:0.37

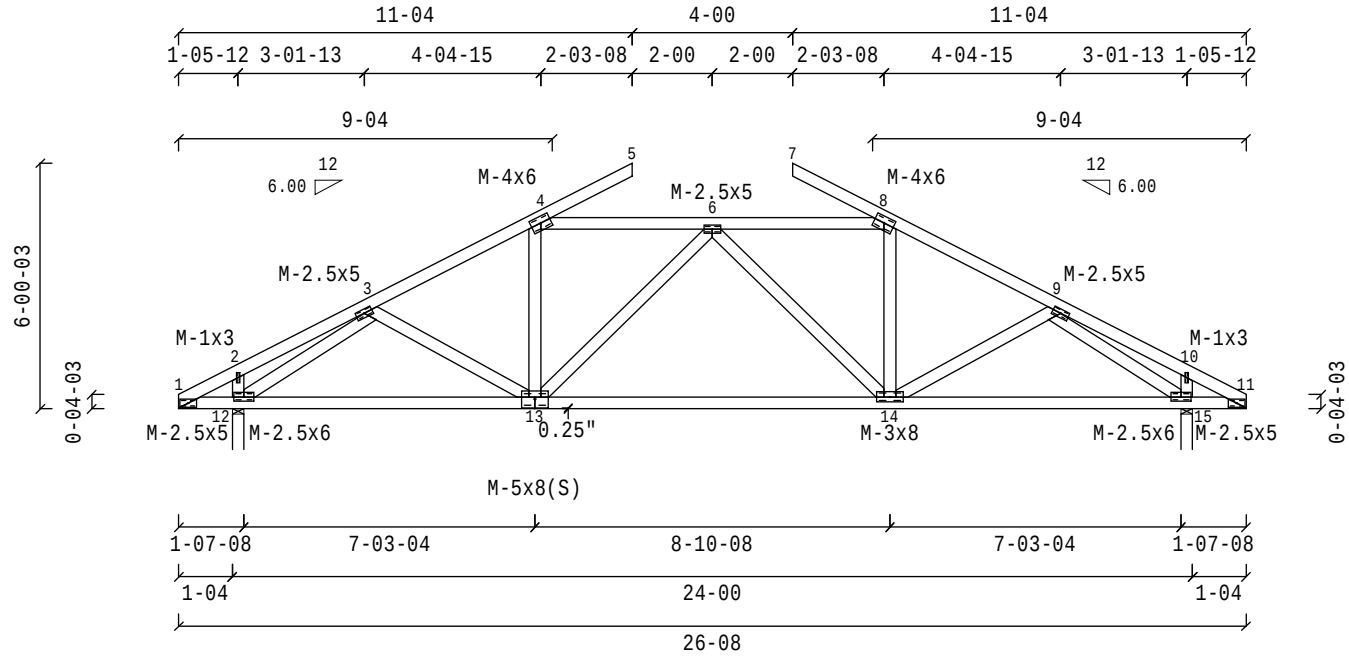

JOB NAME: WESTLAKE VILLAGE 3 - AH2

Scale: 0.2003

Truss: AH2

DES. BY: AM
DATE: 3/31/2016
SEQ.: 6380036
TRANS ID: 435127

WARNINGS:
1. Builder and erection contractor should be advised of all General Notes and Warnings before construction commences.
2. 2x4 compression web bracing must be installed where shown +.
3. Additional temporary bracing to insure stability during construction is the responsibility of the erector. Additional permanent bracing of the overall structure is the responsibility of the building designer.
4. No load should be applied to any component until after all bracing and fasteners are complete and at no time should any loads greater than design loads be applied to any component.
5. CompuTrus has no control over and assumes no responsibility for the fabrication, handling, shipment and installation of components.
6. This design is furnished subject to the limitations set forth by TPI/WTCA in BCSI, copies of which will be furnished upon request.

MiTek USA, Inc./CompuTrus Software 7.6.7-SP3(1L)-E

GENERAL NOTES, unless otherwise noted:
1. This design is based only upon the parameters shown and is for an individual building component. Applicability of design parameters and proper incorporation of component is the responsibility of the building designer.
2. Design assumes the top and bottom chords to be laterally braced at 2' o.c. and at 10' o.c. respectively unless braced throughout their length by continuous sheathing such as plywood sheathing(TC) and/or drywall(BC).
3. 2x Impact bridging or lateral bracing required where shown + +
4. Installation of truss is the responsibility of the respective contractor.
5. Design assumes trusses are to be used in a non-corrosive environment, and are for "dry condition" of use.
6. Design assumes full bearing at all supports shown. Shim or wedge if necessary.
7. Design assumes adequate drainage is provided.
8. Plates shall be located on both faces of truss, and placed so their center lines coincide with joint center lines.
9. Digits indicate size of plate in inches.
10. For basic connector plate design values see ESR-1311, ESR-1988 (MiTek)

REGISTERED PROFESSIONAL ENGINEER
MARK PAUL RIVERA
C 66864
EXP. 09/30/2016
3/31/16
CIVIL
STATE OF CALIFORNIA

This design prepared from computer input by
RAMONA LUMBER RT

LUMBER SPECIFICATIONS
TC: 2x4 DF #1&BTR
BC: 2x4 DF #1&BTR
WEBS: 2x4 DF STAND

TC LATERAL SUPPORT <= 12"OC. UON.
BC LATERAL SUPPORT <= 12"OC. UON.

==========
NOTE: 2x4 BRACING AT 24"OC UON. FOR
ALL FLAT TOP CHORD AREAS NOT SHEATHED
==========

Unbalanced live loads have been
considered for this design.

(2) complete trusses required.
Attach 2 ply with 3"x.131 DIA GUN
nails staggered:
9" oc in 1 row(s) throughout 2x4 top chords,
9" oc in 1 row(s) throughout 2x4 bottom chords,
9" oc in 1 row(s) throughout 2x4 webs.

26-08-00 HIP SETBACK 9-04-00 FROM END WALL
LOAD DURATION INCREASE = 1.25 (Non-Rep)

LOADING

TC UNIF LL(	40.0)+DL(	28.0)=	68.0 PLF	0'- 0.0" TO	9'- 4.0"	V
TC UNIF LL(	113.3)+DL(	79.3)=	192.7 PLF	9'- 4.0" TO	17'- 4.0"	V
TC UNIF LL(	40.0)+DL(	28.0)=	68.0 PLF	17'- 4.0" TO	26'- 8.0"	V
BC UNIF LL(	0.0)+DL(	28.3)=	28.3 PLF	0'- 0.0" TO	26'- 8.0"	V

TC CONC LL(518.5)+DL(363.0)= 881.5 LBS @ 9'- 4.0"
TC CONC LL(518.5)+DL(363.0)= 881.5 LBS @ 17'- 4.0"

LIMITED STORAGE DOES NOT APPLY DUE TO THE SPATIAL
REQUIREMENTS OF CBC 2013 NOT BEING MET.

BOTTOM CHORD CHECKED FOR 10PSF LIVE LOAD. TOP
AND BOTTOM CHORD LIVE LOADS ACT NON-CONCURRENTLY.

CBC2013/IBC2012 MAX MEMBER FORCES 4WR/GDF/Cq=1.00

1- 2=	(-244)	0	1-10=	(0)	246	2-10=	(-254)	56	13- 8=(-254) 54
2- 3=	(-268)	24	10-11=	(-386)	3014	10- 3=	(-3624)	558	
3- 4=	(-4068)	624	11-12=	(-640)	4212	3-11=	(-130)	722	
4- 5=	(-3616)	578	12-13=	(-394)	3014	11- 4=	(0)	466	
5- 6=	(-3616)	580	13- 9=	(0)	246	11- 5=	(-844)	276	
6- 7=	(-4068)	626				5-12=	(-844)	276	
7- 8=	(-268)	26				6-12=	(0)	466	
8- 9=	(-244)	0				12- 7=	(-130)	722	
						7-13=	(-3622)	536	

BEARING LOCATIONS	MAX VERT REACTIONS	MAX HORZ REACTIONS	BRG SIZE	REQUIRED BRG AREA SQ.IN.	(SPECIES)
1'- 4.0"	-319/ 2667V	-88/ 88H	3.50"	3.85	DF (625)
25'- 4.0"	-290/ 2667V	0/ 0H	3.50"	3.85	DF (625)

VERTICAL DEFLECTION LIMITS: LL=L/240, TL=L/180

MAX LL DEFL =	-0.063" @ 17'- 4.0"	Allowed =	1.171"
MAX TL CREEP DEFL =	-0.143" @ 17'- 4.0"	Allowed =	1.561"
MAX BC PANEL LL DEFL =	-0.002" @ 0'- -0.0"	Allowed =	0.053"
MAX BC PANEL TL DEFL =	0.002" @ 0'- 8.1"	Allowed =	0.070"
MAX TC PANEL LL DEFL =	-0.010" @ 26'- 8.0"	Allowed =	0.069"
MAX TC PANEL TL DEFL =	0.004" @ 26'- 8.0"	Allowed =	0.103"

MAX HORIZ. LL DEFL = 0.027" @ 25'- 0.5"
MAX HORIZ. TL DEFL = 0.052" @ 25'- 0.5"

Wind: 115 mph, h=15ft, TCDL=8.4,BCDL=3.0, ASCE 7-10,
(All Heights), Enclosed, Cat.2, Exp.C, MWFRS(Dir),
load duration factor=1.6,
Truss designed for wind loads
in the plane of the truss only.

Max CSI: TC:0.45 BC:0.39 Web:0.52

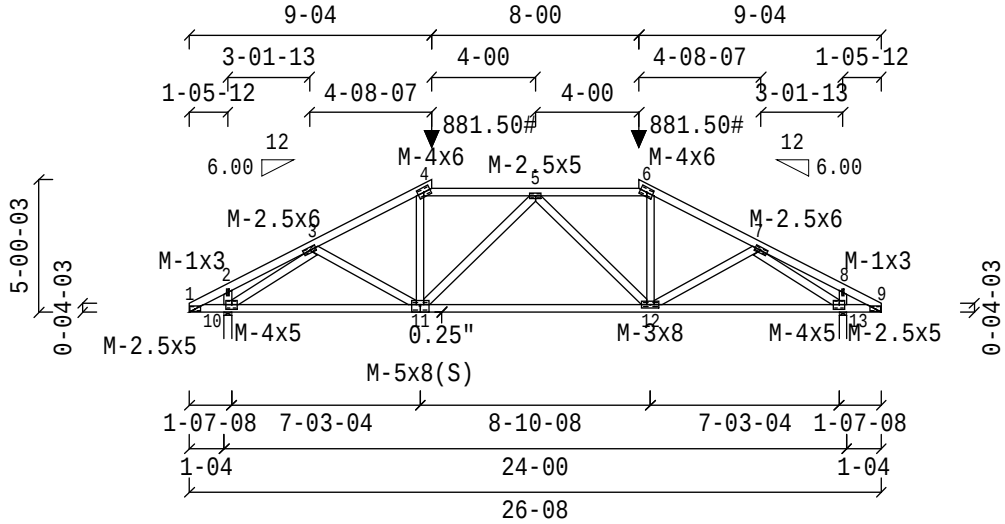

JOB NAME: WESTLAKE VILLAGE 3 - AH1

Scale: 0.1325

Truss: AH1

DES. BY: AM
DATE: 3/31/2016
SEQ.: 6380037
TRANS ID: 435127

WARNINGS:
1. Builder and erection contractor should be advised of all General Notes and Warnings before construction commences.
2. 2x4 compression web bracing must be installed where shown +.
3. Additional temporary bracing to insure stability during construction is the responsibility of the erector. Additional permanent bracing of the overall structure is the responsibility of the building designer.
4. No load should be applied to any component until after all bracing and fasteners are complete and at no time should any loads greater than design loads be applied to any component.
5. CompuTrus has no control over and assumes no responsibility for the fabrication, handling, shipment and installation of components.
6. This design is furnished subject to the limitations set forth by TPI/WTCA in BCSI, copies of which will be furnished upon request.

MiTek USA, Inc./CompuTrus Software 7.6.7-SP3(1L)-E

GENERAL NOTES, unless otherwise noted:
1. This design is based only upon the parameters shown and is for an individual building component. Applicability of design parameters and proper incorporation of component is the responsibility of the building designer.
2. Design assumes the top and bottom chords to be laterally braced at 2' o.c. and at 10' o.c. respectively unless braced throughout their length by continuous sheathing such as plywood sheathing(TC) and/or drywall(BC).
3. 2x Impact bridging or lateral bracing required where shown + +
4. Installation of truss is the responsibility of the respective contractor.
5. Design assumes trusses are to be used in a non-corrosive environment, and are for "dry condition" of use.
6. Design assumes full bearing at all supports shown. Shim or wedge if necessary.
7. Design assumes adequate drainage is provided.
8. Plates shall be located on both faces of truss, and placed so their center lines coincide with joint center lines.
9. Digits indicate size of plate in inches.
10. For basic connector plate design values see ESR-1311, ESR-1988 (MiTek)

REGISTERED PROFESSIONAL ENGINEER
MARK PAUL RIVERA
C 66864
EXP. 09/30/2016
3/31/16
CIVIL
STATE OF CALIFORNIA

This design prepared from computer input by
RAMONA LUMBER RT

LUMBER SPECIFICATIONS
TC: 2x4 DF #1&BTR
BC: 2x4 DF #1&BTR
WEBS: 2x4 DF STAND

TC LATERAL SUPPORT <= 12"OC. UON.
BC LATERAL SUPPORT <= 12"OC. UON.

** For hanger specs. - See approved plans

TRUSS SPAN 9'- 4.0"
LOAD DURATION INCREASE = 1.25
SPACED 24.0" O.C.

LOADING
LL(20.0)+DL(14.0) ON TOP CHORD = 34.0 PSF
DL ON BOTTOM CHORD = 5.0 PSF
TOTAL LOAD = 39.0 PSF

LIMITED STORAGE DOES NOT APPLY DUE TO THE SPATIAL REQUIREMENTS OF CBC 2013 NOT BEING MET.

BOTTOM CHORD CHECKED FOR 10PSF LIVE LOAD. TOP AND BOTTOM CHORD LIVE LOADS ACT NON-CONCURRENTLY.

CBC2013/IBC2012 MAX MEMBER FORCES 4WR/GDF/Cq=1.00
1-2=(-134) 71 1-4=(-12) 108 2-4=(-503) 119
2-3=(-133) 58 4-5=(0) 0

BEARING LOCATIONS	MAX VERT REACTIONS	MAX HORZ REACTIONS	BRG SIZE	REQUIRED BRG AREA SQ.IN.	(SPECIES)
1'- 4.0"	-19/ 430V	-37/ 112H	3.50"	0.62	DF (625)
9'- 2.2"	0/ 60V	0/ 0H	3.50"	0.10	DF (625)
9'- 4.0"	-64/ 239V	0/ 0H	1.50"	0.38	DF (625)

VERTICAL DEFLECTION LIMITS: LL=L/240, TL=L/180
MAX LL DEFL = -0.055" @ 0'- 0.0" Allowed = 0.133"
MAX TL DEFL = -0.029" @ 0'- 0.0" Allowed = 0.178"
MAX TC PANEL LL DEFL = -0.236" @ 5'- 7.9" Allowed = 0.565"
MAX TC PANEL TL DEFL = -0.497" @ 5'- 8.0" Allowed = 0.848"

MAX HORIZ. LL DEFL = -0.059" @ 9'- 3.2"
MAX HORIZ. TL DEFL = 0.096" @ 9'- 3.2"

Wind: 115 mph, h=15ft, TCDL=8.4,BCDL=3.0, ASCE 7-10, (All Heights), Enclosed, Cat.2, Exp.C, MWFRS(Dir), load duration factor=1.6, End vertical(s) are exposed to wind, Truss designed for wind loads in the plane of the truss only.

Max CSI: TC:0.67 BC:0.25 Web:0.05

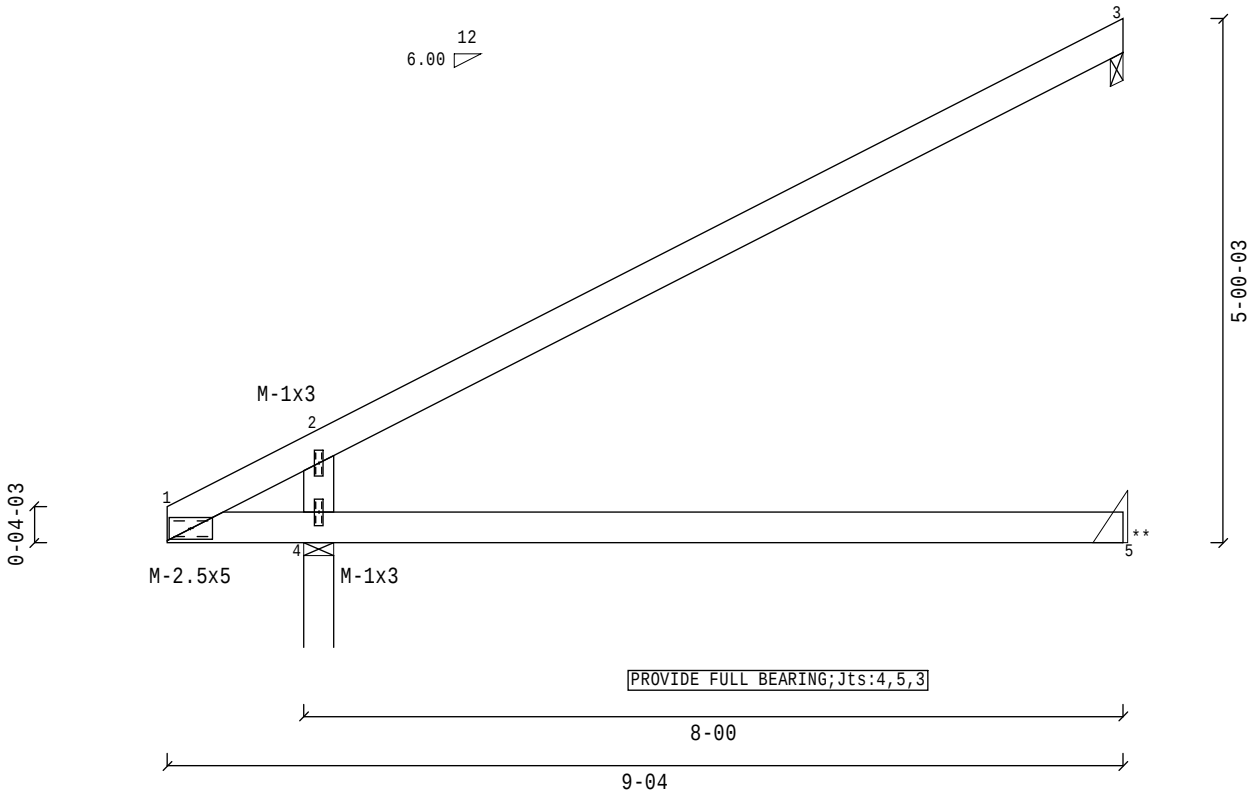

JOB NAME: WESTLAKE VILLAGE 3 - JACK

Scale: 0.5126

Truss: JACK
DES. BY: AM
DATE: 3/31/2016
SEQ.: 6380038
TRANS ID: 435127

WARNINGS:
1. Builder and erection contractor should be advised of all General Notes and Warnings before construction commences.
2. 2x4 compression web bracing must be installed where shown +.
3. Additional temporary bracing to insure stability during construction is the responsibility of the erector. Additional permanent bracing of the overall structure is the responsibility of the building designer.
4. No load should be applied to any component until after all bracing and fasteners are complete and at no time should any loads greater than design loads be applied to any component.
5. CompuTrus has no control over and assumes no responsibility for the fabrication, handling, shipment and installation of components.
6. This design is furnished subject to the limitations set forth by TPI/WTCA in BCSI, copies of which will be furnished upon request.

MiTek USA, Inc./CompuTrus Software 7.6.7-SP3(1L)-E

GENERAL NOTES, unless otherwise noted:
1. This design is based only upon the parameters shown and is for an individual building component. Applicability of design parameters and proper incorporation of component is the responsibility of the building designer.
2. Design assumes the top and bottom chords to be laterally braced at 2' o.c. and at 10' o.c. respectively unless braced throughout their length by continuous sheathing such as plywood sheathing(TC) and/or drywall(BC).
3. 2x Impact bridging or lateral bracing required where shown + +
4. Installation of truss is the responsibility of the respective contractor.
5. Design assumes trusses are to be used in a non-corrosive environment, and are for "dry condition" of use.
6. Design assumes full bearing at all supports shown. Shim or wedge if necessary.
7. Design assumes adequate drainage is provided.
8. Plates shall be located on both faces of truss, and placed so their center lines coincide with joint center lines.
9. Digits indicate size of plate in inches.
10. For basic connector plate design values see ESR-1311, ESR-1988 (MiTek)

REGISTERED PROFESSIONAL ENGINEER
MARK PAUL RIVERA
C 66864
EXP. 09/30/2016
3/31/16
CIVIL
STATE OF CALIFORNIA

WEST COAST LUMBER INSPECTION BUREAU

December 22, 2015

Stacey Rudge
Ramona Lumber Co., Inc.
PO Box 1560
Ramona, CA 92065

Sent via email: Stacey@ramonalumber.com

To Whom It May Concern:

Ramona Lumber Co., Inc., with facilities located at 425 Maple Street, Ramona, California 92065 is a member in good standing of West Coast Lumber Inspection Bureau for truss manufacture and has been since October 2, 2012. As a member, Ramona Truss Co., Inc., is licensed by WCLIB to stamp trusses with the approved quality mark of WCLIB.

West Coast Lumber Inspection Bureau is accredited for the certification of metal plate connected wood trusses by the International Accreditation Service, Incorporated (IAS) of Whittier, California. Our IAS report number is AA675. The WCLIB Quality Auditing truss certification program is conducted in accordance with ANSI/TPI 1, "National Design Standard for Metal Plate Connected Wood Truss Construction."

If you have any questions regarding this, please contact me. Thank you.

Sincerely,

Skeet Rominger
Director of Quality Services

cc : Tim Mathews
Dave Stivers

P:\Company Shared Folders\TRUSS PLANTS\SR-Ramona Truss 12-22-15.docx

Portland 503.639.0651 • **FAX** 503.684.8928 • **Grants Pass** 541.471.1610 • **WA** 253.830.2401 • **So. CA** 714.425.0148
6980 S.W. Varns Street, Tigard Oregon 97223 • Mailing Address : P.O. Box 23145 • Portland • Oregon 97281-3145

ALTERNATE FRAMING DETAIL AROUND 30" ACCESS

Computrus, Inc.
Custom Software Engineering Manufacturing

TYPICAL ROOF TRUSS LAYOUT

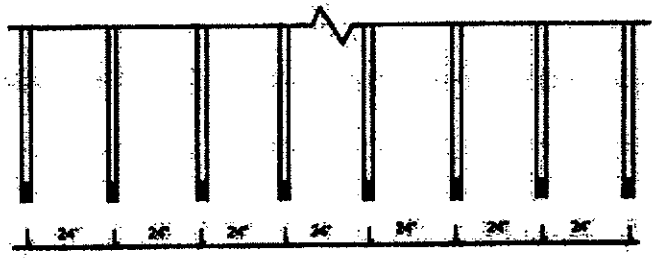

NOTE: REFER TO APPROPRIATE ENGINEERING DETAIL FOR TRUSS TYPES DESIGNED FOR OVERSPACING.

ADJUSTED ROOF TRUSS LAYOUT

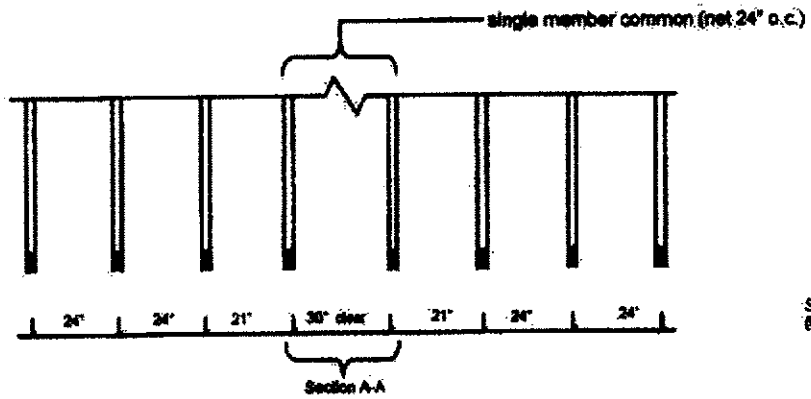

Ladder Frame
Between trusses with 2x4 at 48" o.c.

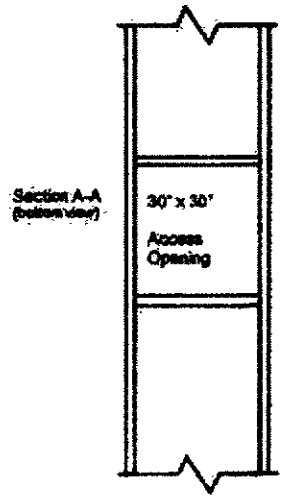

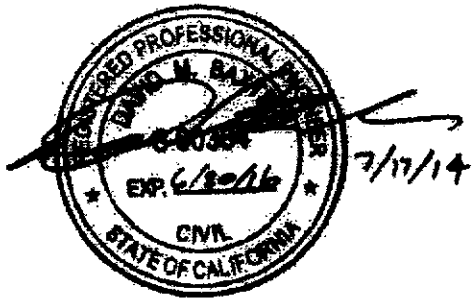

7/17/14

FILE NO:	30" ATTIC ACCESS
DATE:	07/23/08
REF:	25-1 R 7/17/14 MJ
CBC2013 / IBC2012	
SEQ:	85480663

Computrus, Inc.

Custom Software Engineering Manufacturing

PRESSURE BLOCKING DETAIL FOR END JACK BOTTOM CHORD UP TO 8'-0" AT HIP NO. 1 WITH CEILING LOAD OF 10psf

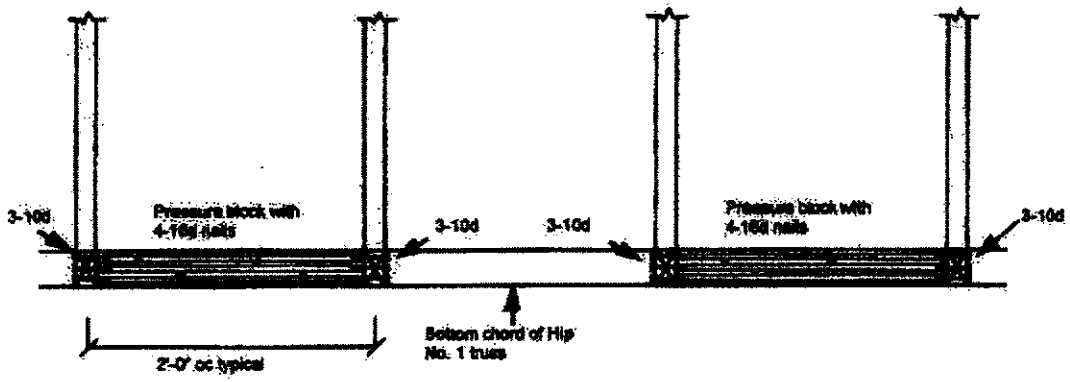

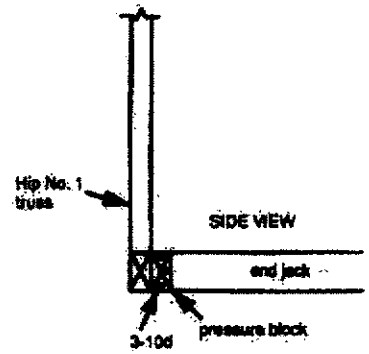

NOTE: Attach 2x4 Doug Fir pressure block to bottom chord of hip no. 1 with 4-16d nails. Bottom chords of end joints are attached with 3-10d nails at each end of the pressure block.

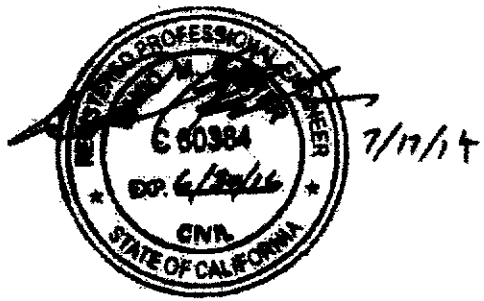

FILE NO:	PRESSURE BLOCKING
DATE:	01/20/06
REF:	15,25-1 R 7/17/14 MJ
CBC2013/IBC2012	
SEQ:	S5480564

FEBRUARY 14, 2012	Standard Gable End Detail	ST-GE100-001

MiTek USA, Inc.

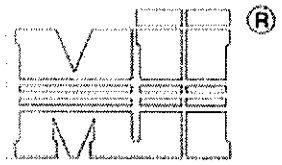

MiTek USA, Inc.

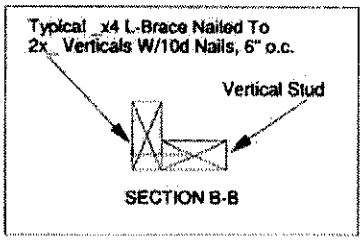

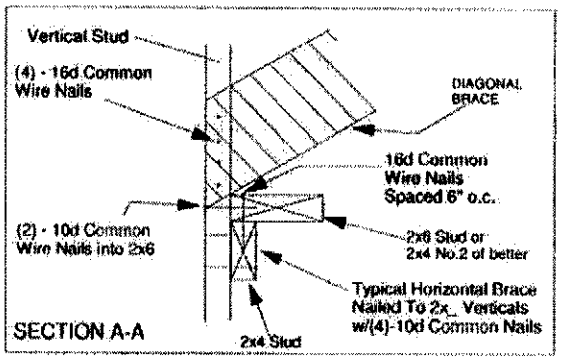

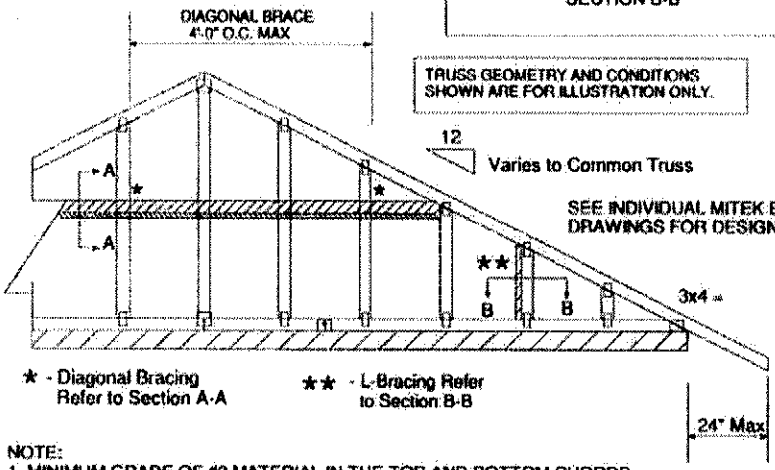

TRUSS GEOMETRY AND CONDITIONS SHOWN ARE FOR ILLUSTRATION ONLY.

12 Varies to Common Truss

SEE INDIVIDUAL MITEK ENGINEERING DRAWINGS FOR DESIGN CRITERIA

PROVIDE 2x4 BLOCKING BETWEEN THE FIRST TWO TRUSSES AS NOTED. TOENAIL BLOCKING TO TRUSSES WITH (2) - 10d NAILS AT EACH END. ATTACH DIAGONAL BRACE TO BLOCKING WITH (5) - 10d COMMON WIRE NAILS.

(4) - 8d NAILS MINIMUM, PLYWOOD SHEATHING TO 2x4 STD SPF BLOCK

★ - Diagonal Bracing Refer to Section A-A

★★ - L-Bracing Refer to Section B-B

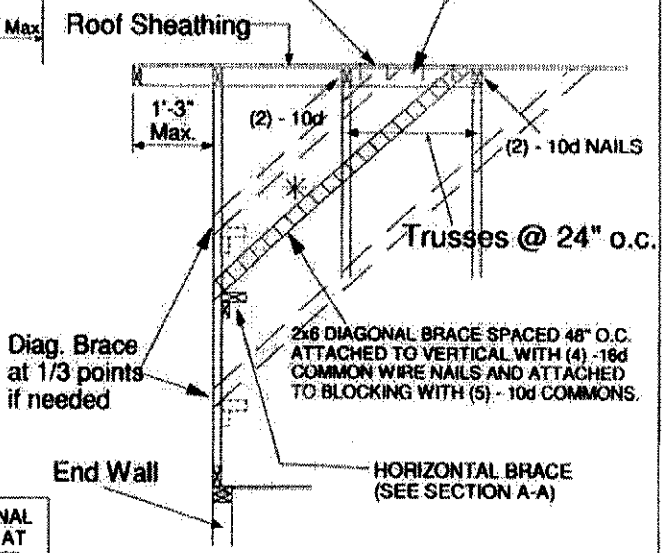

NOTE:
1. MINIMUM GRADE OF #2 MATERIAL IN THE TOP AND BOTTOM CHORDS.
2. CONNECTION BETWEEN BOTTOM CHORD OF GABLE END TRUSS AND WALL TO BE PROVIDED BY PROJECT ENGINEER OR ARCHITECT.
3. BRACING SHOWN IS FOR INDIVIDUAL TRUSS ONLY. CONSULT BLDG. ARCHITECT OR ENGINEER FOR TEMPORARY AND PERMANENT BRACING OF ROOF SYSTEM.
4. "L" BRACES SPECIFIED ARE TO BE FULL LENGTH. GRADES: 1x4 SRB OR 2x4 STUD OR BETTER WITH ONE ROW OF 10d NAILS SPACED 6" O.C.
5. DIAGONAL BRACE TO BE APPROXIMATELY 45 DEGREES TO ROOF DIAPHRAM AT 4'-0" O.C.
6. CONSTRUCT HORIZONTAL BRACE CONNECTING A 2x6 STUD AND A 2x4 STUD AS SHOWN WITH 16d NAILS SPACED 6" O.C. HORIZONTAL BRACE TO BE LOCATED AT THE MIDSPAN OF THE LONGEST STUD. ATTACH TO VERTICAL STUDS WITH (4) 10d NAILS THROUGH 2x4. (REFER TO SECTION A-A)
7. GABLE STUD DEFLECTION MEETS OR EXCEEDS L/240.
8. THIS DETAIL DOES NOT APPLY TO STRUCTURAL GABLES.
9. DO NOT USE FLAT BOTTOM CHORD GABLES NEXT TO SCISSOR TYPE TRUSSES.

Minimum Stud Size Species and Grade	Stud Spacing	Without Brace	1x4 L-Brace	2x4 L-Brace	DIAGONAL BRACE	2 DIAGONAL BRACES AT 1/3 POINTS
		Maximum Stud Length				
2x4 SPF Std/Stud	12" O.C.	4-9-12	5-6-7	7-10-0	9-7-7	14-5-3
2x4 SPF Std/Stud	16" O.C.	4-4-7	4-9-8	6-9-6	8-8-14	13-1-5
2x4 SPF Std/Stud	24" O.C.	3-9-10	3-11-0	5-6-7	7-7-4	11-4-14

✳ Diagonal braces over 6'-3" require a 2x4 T-Brace attached to one edge. Diagonal braces over 12'-6" require 2x4 I-braces attached to both edges. Fasten T and I braces to narrow edge of web with 10d common wire nails 8in o.c., with 3in minimum end distance. Brace must cover 90% of diagonal length.

REGISTERED PROFESSIONAL ENGINEER
DAVID M. BAKER
C 60384
EXP. 6/30/16
CIVIL
STATE OF CALIFORNIA

7-18-14

MAX MEAN ROOF HEIGHT = 30 FEET
CATEGORY II BUILDING
EXPOSURE B or C
ASCE 7-98, ASCE 7-02, ASCE 7-05 100 MPH
ASCE7-10 125 MPH
DURATION OF LOAD INCREASE : 1.60

STUD DESIGN IS BASED ON COMPONENTS AND CLADDING. CONNECTION OF BRACING IS BASED ON MWFRS.

MiTek USA, Inc.

ALTERNATE DIAGONAL BRACING TO THE BOTTOM CHORD

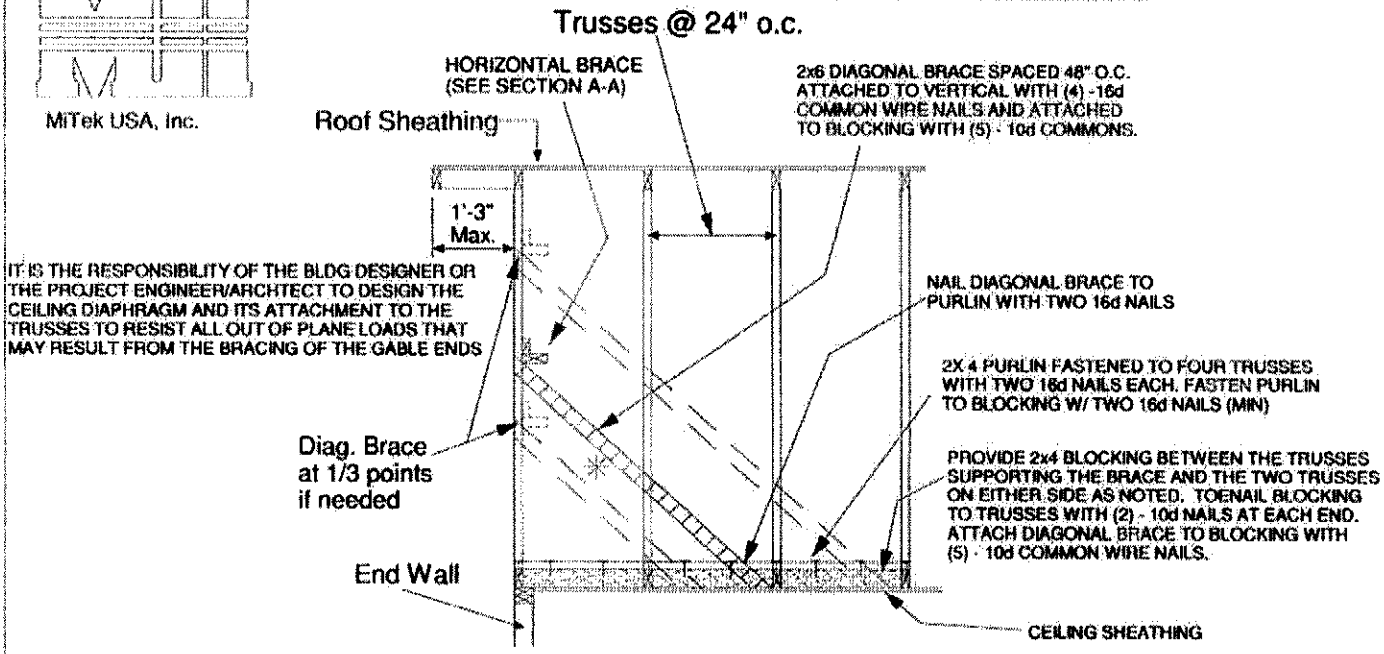

BRACING REQUIREMENTS FOR STRUCTURAL GABLE TRUSSES

STRUCTURAL GABLE TRUSSES MAY BE BRACED AS NOTED:

METHOD 1 : ATTACH A MATCHING GABLE TRUSS TO THE INSIDE FACE OF THE STRUCTURAL GABLE AND FASTEN PER THE FOLLOWING NAILING SCHEDULE.

METHOD 2 : ATTACH 2X_ SCABS TO THE FACE OF EACH VERTICAL MEMBER ON THE STRUCTURAL GABLE PER THE FOLLOWING NAILING SCHEDULE. SCABS ARE TO BE OF THE SAME SIZE, GRADE AND SPECIES AS THE TRUSS VERTICALS

NAILING SCHEDULE:

- FOR WIND SPEEDS 120 MPH (ASCE 7-98, 02, 05), 150 MPH (ASCE 7-10) OR LESS, NAIL ALL MEMBERS WITH ONE ROW OF 10d (.131" X 3") NAILS SPACED 6" O.C.
- FOR WIND SPEEDS GREATER 120 MPH (ASCE 7-98, 02, 05), 150 MPH (ASCE 7-10) NAIL ALL MEMBERS WITH TWO ROWS OF 10d (.131" X 3") NAILS SPACED 6" O.C. (2X 4 STUDS MINIMUM)

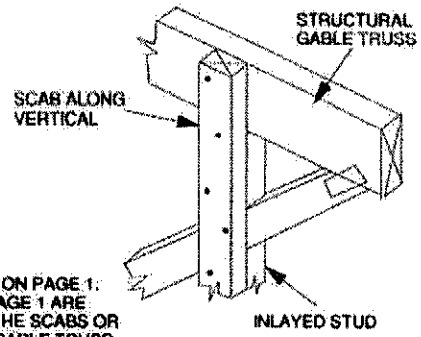

MAXIMUM STUD LENGTHS ARE LISTED ON PAGE 1. ALL BRACING METHODS SHOWN ON PAGE 1 ARE VALID AND ARE TO BE FASTENED TO THE SCABS OR VERTICAL STUDS OF THE STANDARD GABLE TRUSS ON THE INTERIOR SIDE OF THE STRUCTURE.

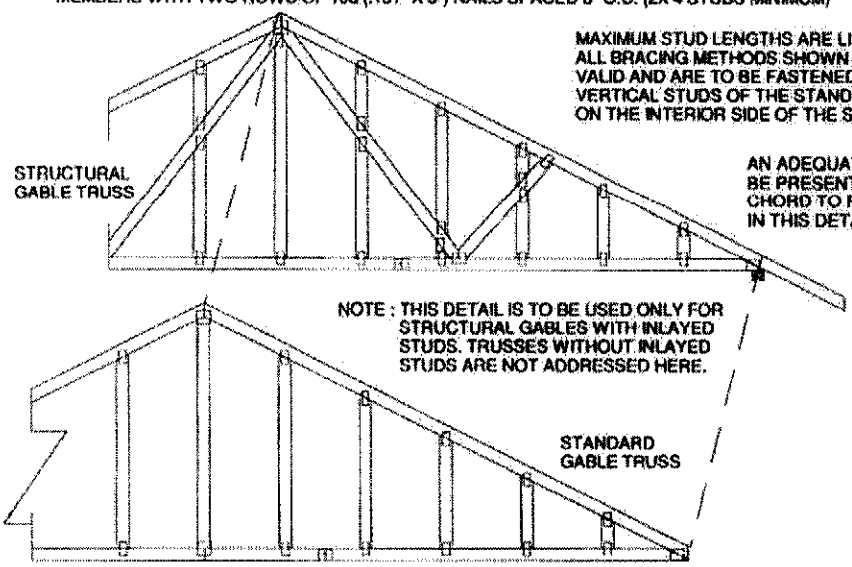

AN ADEQUATE DIAPHRAGM OR OTHER METHOD OF BRACING MUST BE PRESENT TO PROVIDE FULL LATERAL SUPPORT OF THE BOTTOM CHORD TO RESIST ALL OUT OF PLANE LOADS. THE BRACING SHOWN IN THIS DETAIL IS FOR THE VERTICAL/STUDS ONLY.

NOTE : THIS DETAIL IS TO BE USED ONLY FOR STRUCTURAL GABLES WITH INLAYED STUDS. TRUSSES WITHOUT INLAYED STUDS ARE NOT ADDRESSED HERE.

REGISTERED PROFESSIONAL ENGINEER
DAVID M. BAKER
C 60384
EXP. 6/30/16
CIVIL
STATE OF CALIFORNIA

7-18-14

DETAIL FOR COMMON AND END JACKS	MII/SAC - 8 -20PSF	8/31/2005	PAGE 1

MAX LOADING (psf)		SPACING	2-0-0
TCLL	20.0	Plates Increase	1.15
TCDL	16.0	Lumber Increase	1.15
BCLL	0.0	Rep Stress Incr	YES
BCDL	10.0		

BRACING
TOP CHORD Sheathed.
BOT CHORD Rigid ceiling directly applied.

MiTek Industries, Inc.
Western Division

MINIMUM LUMBER SIZE AND GRADE
TOP CHORD 2 X 4 HF, DF-L No.1
BOT CHORD 2 X 4 SPF, HF, DF-L No.2

LENGTH OF EXTENSION
AS DESIGN REQ'D 20"-0" MAX

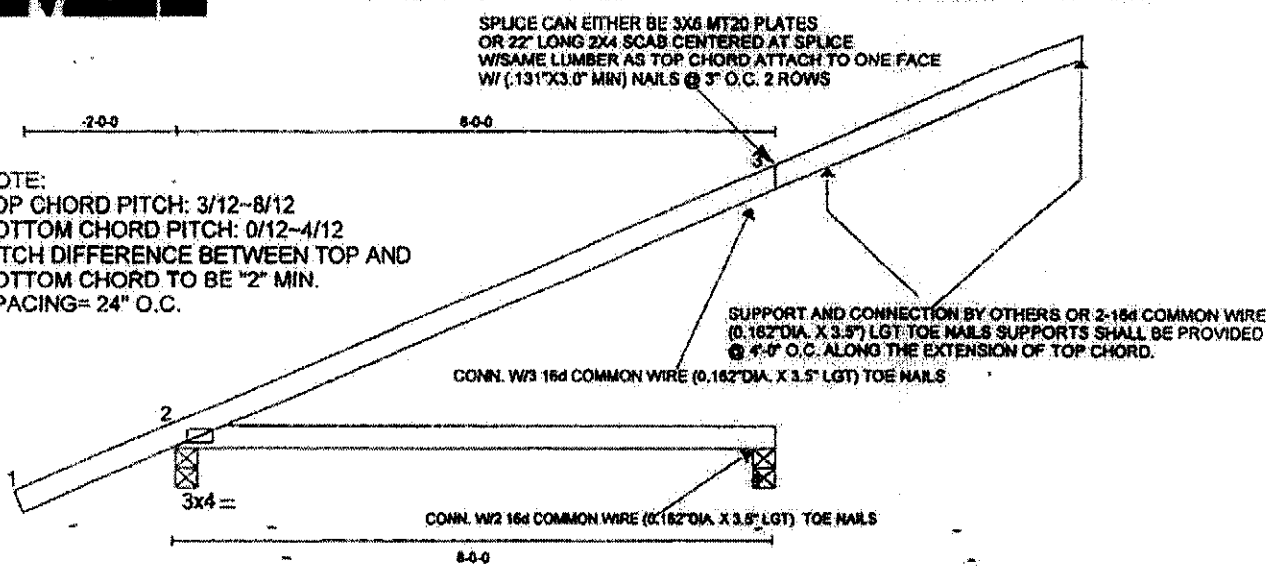

NOTE:
TOP CHORD PITCH: 3/12~8/12
BOTTOM CHORD PITCH: 0/12~4/12
PITCH DIFFERENCE BETWEEN TOP AND BOTTOM CHORD TO BE "2" MIN.
SPACING= 24" O.C.

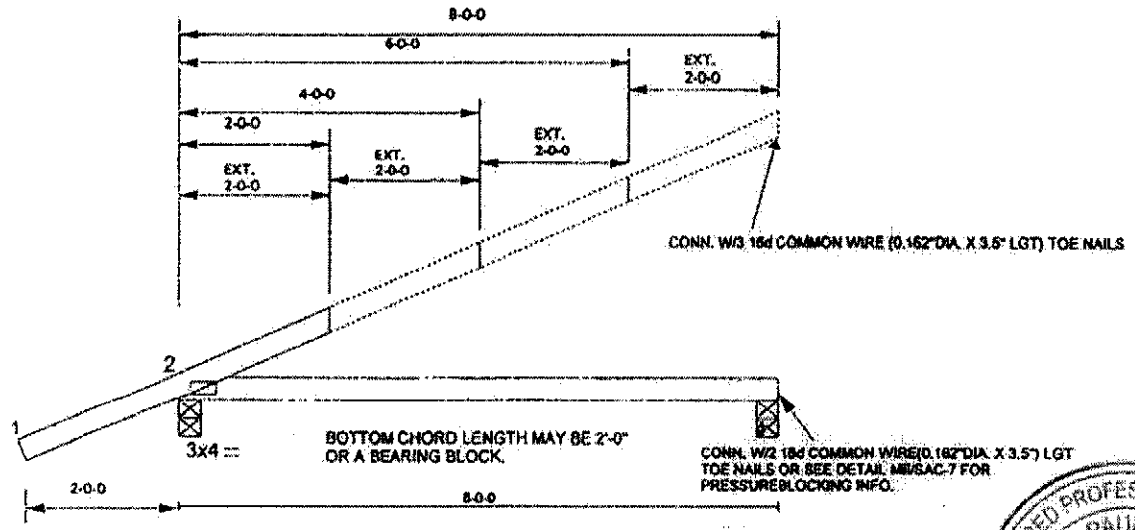

NOTE: NAILING SHALL BE SUCH THAT THE LUMBER DOES NOT SPLIT.

REGISTERED PROFESSIONAL ENGINEER
MARK PAUL RIVERS
C 66864
EXP. 7/31/06
CIVIL
STATE OF CALIFORNIA

WARNING - Verify design parameters and READ NOTES ON THIS AND INCLUDED MITEK REFERENCE PAGE MII-7473 BEFORE USE.
Design valid for use only with MiTek connectors. This design is based only upon parameters shown, and is for an individual building component. Applicability of design parameters and proper incorporation of component is responsibility of building designer - not truss designer. Bracing shown is for lateral support of individual web members only. Additional temporary bracing to insure stability during construction is the responsibility of the erector. Additional permanent bracing of the overall structure is the responsibility of the building designer. For general guidance regarding fabrication, quality control, storage, delivery, erection and bracing, consult ANSI/TPI Quality Criteria, DSB-89 and BCSI Building Component Safety Information available from Truss Plate Institute, 583 D'Onofrio Drive, Madison, WI 53719.

7777 Greenback Lane
Suite 109
Citrus Heights, CA. 95610

MiTek®

SUPPORT OF B.C. OF STANDARD OPEN END JACK USING PRESSURE BLOCKS	MII/SAC - 7	3/30/2004	PAGE 1

MiTek Industries, Inc.
Western Division

Loading (PSF): -

BCDL 10.0 PSF MAX

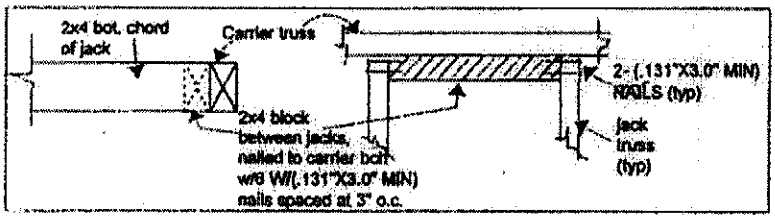

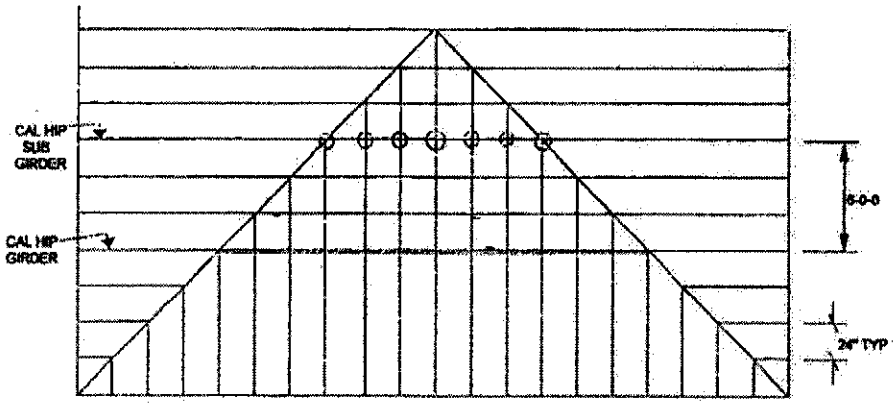

PARTIAL FRAMING PLAN OF
CALIFORNIA HIP SET WITH
SUB GIRDER

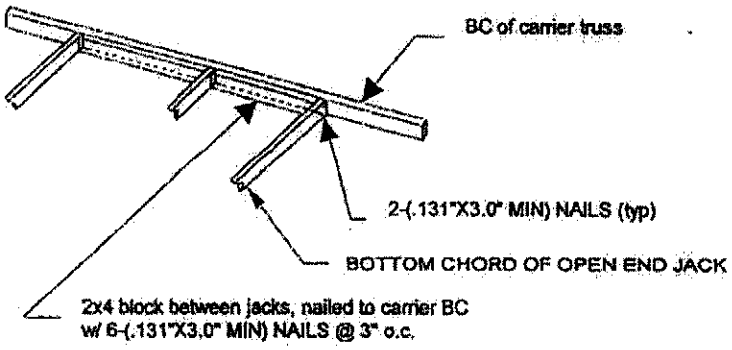

REGISTERED PROFESSIONAL ENGINEER
MARK PAUL RIVERS
C 66864
EXP.
CIVIL
STATE OF CALIFORNIA

WARNING - Verify design parameters and READ NOTES ON THIS AND INCLUDED MITEK REFERENCE PAGE MII-7473 BEFORE USE.
Design valid for use only with MiTek connectors. This design is based only upon parameters shown, and is for an individual building component. Applicability of design parameters and proper incorporation of component is responsibility of building designer - not truss designer. Bracing shown is for lateral support of individual web members only. Additional temporary bracing to insure stability during construction is the responsibility of the erector. Additional permanent bracing of the overall structure is the responsibility of the building designer. For general guidance regarding fabrication, quality control, storage, delivery, erection and bracing, consult ANSI/TPI1 Quality Criteria, DSB-89 and BCSI Building Component Safety Information available from Truss Plate Institute, 583 D'Onofrio Drive, Madison, WI 53719.

7777 Greenback Lane
Suite 109
Citrus Heights, CA, 95610

MiTek

BUILDING ENERGY ANALYSIS REPORT

PROJECT:

Westlake Village Park RR
31107 East Thousand Oaks Blvd.
Westlake Village, CA 91361

Project Designer:

Precision Structural Engineering, Inc.
250 Main St. Ste. A
Klamath Falls, Oregon 97601
541-850-6300

Report Prepared by:

Adrian Starr
A 5 Starr Energy Corporation
2809 Bechelli Lane
Redding, CA 96002
530-275-3350

Job Number:

1603-030 Westlake Village Park RR

Date:

3/28/2016

The EnergyPro computer program has been used to perform the calculations summarized in this compliance report. This program has approval and is authorized by the California Energy Commission for use with both the Residential and Nonresidential 2013 Building Energy Efficiency Standards.

This program developed by EnergySoft, LLC – www.energysoft.com.

TABLE OF CONTENTS

Cover Page	1
Table of Contents	2
Form LTI-01-E Indoor Lighting	3
Form LTI-02-E Lighting Controls	9
Form LTI-03-E Indoor Lighting Power Allowance	12
Form LTO-01-E Outdoor Lighting	16
Form LTO-02-E Outdoor Lighting Controls	20
Form LTO-03-E Outdoor Lighting Power Allowances	23

CERTIFICATE OF COMPLIANCE	NRCC-LTI-01-E
Indoor Lighting	(Page 1 of 6)
Project Name: Westlake Village Park RR	Date Prepared: 3/28/2016

A. General Information

Climate Zone: 9	Conditioned Floor Area : 0					
	Unconditioned Floor Area : 688					
Building Type:	☐	Nonresidential	☐	High-Rise Residential	☐	Hotel/Motel
☐ Schools	☐	Relocatable Public Schools	☐	Conditioned Spaces	☑	Unconditioned Spaces
Phase of Construction:	☑	New Construction	☐	Addition	☐	Alteration
Method of Compliance:	☑	Complete Building	☐	Area Category	☐	Tailored
Project Address: 31107 East Thousand Oaks Blvd.						

B. Lighting Compliance Documents (select yes for each document included)

For detailed instructions on the use of this and all Energy Efficiency Standards compliance documents, refer to the Nonresidential Manual published by the California Energy Commission.

YES	NO	FORM	TITLE
✓		NRCC-LTI-01-E	Certificate of Compliance. All Pages required on plans for all submittals.
✓		NRCC-LTI-02-E	Lighting Controls, Certificate of Compliance, and PAF Calculation. All Pages required on plans for all submittals.
✓		NRCC-LTI-03-E	Indoor Lighting Power Allowance
	✓	NRCC-LTI-04-E	Tailored Method Worksheets
	✓	NRCC-LTI-05-E	Line Voltage Track Lighting Worksheets

C. Summary of Allowed Lighting Power

Conditioned and Unconditioned space Lighting must not be combined for compliance

	Indoor Lighting Power for Conditioned Spaces			Indoor Lighting Power for Unconditioned Spaces		
			Watts			Watts
1.	**Installed** Lighting NRCC-LTI-01-E, page 4	+	0	**Installed** Lighting NRCC-LTI-01-E, page 4	+	413
2.	PORTABLE ONLY FOR OFFICES NRCC-LTI-01-E, page 3	+				
3.	Minus Lighting Control Credits NRCC-LTI-02-E, page 2	-	0	Minus Lighting Control Credits NRCC-LTI-02-E, page 2	-	0
4.	Adjusted **Installed** Lighting Power (row 1 plus row 2 minus row 3)	=	0	Adjusted **Installed** Lighting Power (row 1 minus row 3)	=	413
5.	Complies ONLY if **Installed ≤ Allowed**			Complies ONLY if **Installed ≤ Allowed**		
6.	**Allowed** Lighting Power Conditioned NRCC-LTI-03-E, page 1		0	**Allowed** Lighting Power Unconditioned NRCC-LTI-03-E, page 1		1,032

D. Declaration of Required Installation Certificates

Declare by selecting yes for all Installation Certificates that will be submitted. (Retain copies and verify forms are completed and signed.)

YES	NO	Form/Title	
✓		NRCI-LTI-01-E - Must be submitted for all buildings	☐ Field Inspector
	✓	NRCI-LTI-02-E - Must be submitted for a lighting control system, or for an Energy Management Control System (EMCS), to be recognized for compliance.	☐ Field Inspector
	✓	NRCI-LTI-03-E - Must be submitted for a line-voltage track lighting integral current limiter, or for a supplementary overcurrent protection panel used to energize only line-voltage track lighting, to be recognized for compliance.	☐ Field Inspector
	✓	NRCI-LTI-04-E - Must be submitted for two interlocked systems serving an auditorium, a convention center, a conference room, a multipurpose room, or a theater to be recognized for compliance.	☐ Field Inspector
	✓	NRCI-LTI-05-E - Must be submitted for a Power Adjustment Factor (PAF) to be recognized for compliance.	☐ Field Inspector
	✓	NRCI-LTI-06-E - Must be submitted for additional wattage installed in a video conferencing studio to be recognized for compliance.	☐ Field Inspector

E. Declaration of Required Certificates of Acceptance

Declare by checking all of the Certificates of Acceptance that will be submitted. (Retain copies and verify forms are completed and signed.)

YES	NO	Form/Title	
	✓	NRCA-LTI-02-A - Must be submitted for occupancy sensors and automatic time switch controls.	☐ Field Inspector
	✓	NRCA-LTI-03-A - Must be submitted for automatic daylight controls.	☐ Field Inspector
	✓	NRCA-LTI-04-A - Must be submitted for demand responsive lighting controls.	☐ Field Inspector

A separate Lighting Schedule Must Be Filled Out for Conditioned and Unconditioned Spaces. Installed Lighting Power listed on this Lighting Schedule is only for:

☐ **CONDITIONED SPACE** ☐ **UNCONDITIONED SPACE**

F. Indoor Lighting Schedule and Field Inspection Energy Checklist

☐ The actual indoor lighting power listed on this page and on the next page includes all installed permanent and planned portable lighting systems.

☐ When Complete Building Method is used for compliance, list each different type of luminaire on separate lines.

☐ When Area Category Method or Tailored Method is used for compliance, list each different type of luminaire by each different function area on separate lines

☐ Also include track lighting in schedule, and submit the track lighting compliance form (NRCC-LTI-05-E) when line-voltage track lighting is installed.

G. Installed Portable Luminaires in Offices – Exception to Section 140.6(a)

- ☐ This section shall be filled out ONLY for portable luminaires in offices (As defined in §100.1). All other planned portable luminaires shall be documented on next page of this compliance form.
- ☐ This section is used to determine if greater than 0.3 watts of portable lighting is planned for any office
- ☐ Fill out a separate line for each different office. Small offices that are typical (having the same general and portable lighting) may be grouped together. This allowance shall not be traded between offices having different lighting systems.

Office Portable Luminaire Schedule	Office Installed Portable Luminaire Watts Per Square Foot							Office Location	Field Inspector	
1	2	3	4	5	6	7	8	9	10	
Complete Luminaire Description (i.e., LED, under cabinet, furniture mounted direct/indirect)	Watts per Luminaire	Number of Luminaires	Installed portable luminaire watts in this office (G02 x G03)	Square feet of this office	Watts per square foot (G04 / G05)	If F ≤ 0.3, enter zero; if G06 > 0.3, (G06-0.3)	G05 x G07	Identify Office area in which these portable luminaires are installed	Pass	Fail
									☐	☐
									☐	☐
									☐	☐
									☐	☐
									☐	☐
Total installed portable luminaire watts that are greater than 0.3 watts per square foot per office:								Enter sum total of all pages into NRCC-LTI-01-E; Page 1		

CERTIFICATE OF COMPLIANCE	NRCC-LTI-01-E
Indoor Lighting	(Page 5 of 6)
Project Name: Westlake Village Park RR	Date Prepared: 3/28/2016

A separate Lighting Schedule Must Be Filled Out for Conditioned and Unconditioned Spaces. Installed Lighting Power listed on this Lighting Schedule is only for:

☐ **CONDITIONED SPACE** ☑ **UNCONDITIONED SPACE**

H. INDOOR LIGHTING SCHEDULE and FIELD INSPECTION ENERGY CHECKLIST

Luminaire Schedule		Installed Watts					Location	Field Inspector [1]	
A	B	C	D		E	F	G	H	
Name or Item Tag	Complete Luminaire Description (i.e, 3 lamp fluorescent troffer, F32T8, one dimmable electronic ballast)	Watts per Luminaire	How wattage was determined: CEC Default from NA8	How wattage was determined: According to §130.0(c)	Number Luminaires	Total Installed Watts in this area (H03 x H05)	Primary Function area in which these luminaires are installed	Pass	Fail
	Standard Allowance: 688 sqft at 0.600 watt/sf		☐	☐		413	Bathroom	☐	☐
			☐	☐				☐	☐
			☐	☐				☐	☐
			☐	☐				☐	☐
			☐	☐				☐	☐
			☐	☐				☐	☐
			☐	☐				☐	☐
			☐	☐				☐	☐
			☐	☐				☐	☐
					INSTALLED WATTS PAGE TOTAL:	413	Enter sum total of all pages into NRCC-LTI-01-E; Page 2		

CERTIFICATE OF COMPLIANCE	NRCC-LTI-01-E
Indoor Lighting	(Page 6 of 6)
Project Name: Westlake Village Park RR	Date Prepared: 3/28/2016

DOCUMENTATION AUTHOR'S DECLARATION STATEMENT	
1. I certify that this Certificate of Compliance documentation is accurate and complete.	
Documentation Author Name: Adrian Starr	Documentation Author Signature:
Company: A 5 Starr Energy Corporation	Signature Date: 3/28/2016
Address: 2809 Bechelli Lane	CEA Certification Identification (if applicable):
City/State/Zip: Redding, CA 96002	Phone: 530-275-3350

RESPONSIBLE PERSON'S DECLARATION STATEMENT

I certify the following under penalty of perjury, under the laws of the State of California:

1. The information provided on this Certificate of Compliance is true and correct.
2. I am eligible under Division 3 of the Business and Professions Code to accept responsibility for the building design or system design identified on this Certificate of Compliance (responsible designer).
3. The energy features and performance specifications, materials, components, and manufactured devices for the building design or system design identified on this Certificate of Compliance conform to the requirements of Title 24, Part 1 and Part 6 of the California Code of Regulations.
4. The building design features or system design features identified on this Certificate of Compliance are consistent with the information provided on other applicable compliance documents, worksheets, calculations, plans and specifications submitted to the enforcement agency for approval with this building permit application.
5. I will ensure that a completed signed copy of this Certificate of Compliance shall be made available with the building permit(s) issued for the building, and made available to the enforcement agency for all applicable inspections. I understand that a completed signed copy of this Certificate of Compliance is required to be included with the documentation the builder provides to the building owner at occupancy.

Responsible Designer Name: Nabil (Bill) Taha	Responsible Designer Signature:
Company : Precision Structural Engineering, Inc.	Date Signed: 3-28-16
Address: 250 Main St. Ste. A	License: C60802
City/State/Zip: Klamath Falls, Oregon 97601	Phone: 541-850-6300

CERTIFICATE OF COMPLIANCE	NRCC-LTI-02-E
Indoor Lighting - Lighting Controls	(Page 1 of 3)
Project Name: Westlake Village Park RR	Date Prepared: 3/28/2016

The NRCC-LTI-02-E shall be used to document all mandatory and prescriptive lighting controls that are applicable to the project.

Mandatory Lighting Control Declaration Statements (Indicate if the measure applies by checking yes or no below.)

YES	NO	Control Requirements
	✓	Lighting shall be controlled by self-contained lighting control devices which are certified to the Energy Commission according to the Title 20 Appliance Efficiency Regulations in accordance with Section 110.9.
	✓	Lighting shall be controlled by a lighting control a system or energy management control system in accordance with §110.9. An Installation Certificate shall be submitted in accordance with Section 130.4(b).
	✓	One or more Track Lighting Integral Current Limiters shall be installed which have been certified to the Energy Commission in accordance with §110.9 and §130.0. Additionally, an Installation Certificate shall be submitted in accordance with Section 130.4(b).
	✓	A Track Lighting Supplementary Overcurrent Protection Panel shall be installed in accordance with Section 110.9 and Section 130.0. Additionally, an Installation Certificate shall be installed in accordance with Section 130.4(b).
✓		All lighting controls and equipment shall comply with the applicable requirements in §110.9 and shall be installed in accordance with the manufacturer's instructions in accordance with Section 130.1.
	✓	All luminaires shall be functionally controlled with manually switched ON and OFF lighting controls in accordance with Section 130.1(a).
✓		General lighting shall be separately controlled from all other lighting systems in an area. Floor and wall display, window display, case display, ornamental, and special effects lighting shall each be separately controlled on circuits that are 20 amps or less. When track lighting is used, general, display, ornamental, and special effects lighting shall each be separately controlled; in accordance with Section 130.1(a)4.
	✓	The general lighting of any enclosed area 100 square feet or larger, with a connected lighting load that exceeds 0.5 watts per square foot shall meet the multi-level lighting control requirements in accordance with Section 130.1(b).
	✓	All installed indoor lighting shall be equipped with controls that meet the applicable Shut-OFF control requirements in Section 130.1(c).
	✓	Lighting in all Daylit Zones shall be controlled in accordance with the requirements in Section 130.1(d) and daylit zones are shown on the plans.
	✓	Lighting power in buildings larger than 10,000 square feet shall be capable of being automatically reduced in response to a Demand Responsive Signal in accordance with Section 130.1(e).
✓		Before an occupancy permit is granted for a newly constructed building or area, or a new lighting system serving a building, area, or site is operated for normal use, indoor lighting controls serving the building, area, or site shall be certified as meeting the Acceptance Requirements for Code Compliance in accordance with Section 130.4.(a). The controls required to meet the Acceptance Requirements include automatic daylight controls, automatic shut-OFF controls, and demand responsive controls.

A separate document must be filled out for Conditioned and Unconditioned Spaces. This page is used only for the following:

☐ CONDITIONED SPACES ☑ UNCONDITIONED SPACES

MANDATORY AND PRESCRIPTIVE INDOOR LIGHTING CONTROL SCHEDULE, PAF CALCULATION, and FIELD INSPECTION CHECKLIST

Lighting Control Schedule			Standards Complying With [1] (✓ all that apply, or enter 'E' if Exempted)							PAF Credit Calculation [2]			✓ if Acceptance Test Required	Field Inspector	
										Watts of Controlled Lighting	PAF	Control Credit (K x L)			
A	B	C	D	E	F	G	H	I	J	K	L	M	N	O	
Location in Building	Type/ Description of Lighting Control (i.e.: occupancy sensor, automatic time switch, dimmer, automatic daylight, etc...)	# of Units	§130.1(a)	§130.0(b)	§130.1(c)	§130.1(d)	§130.1(e)	§140.6(a)2	§140.6(d)					Pass	Fail
														☐	☐
														☐	☐
														☐	☐
														☐	☐
														☐	☐
														☐	☐
														☐	☐
Control Credit PAGE TOTAL (Sum of Column M):												0			
IF MULTIPLE PAGES ARE USED, ENTER SUM TOTAL OF Control Credit for all pages HERE (Sum of all Column M):												0			
												Enter Control Credit total into NRCC-LTI-01-E; Page 1.			

1. §130.1(a) = Manual area controls; §130.0(b) = Multi Level; §130.1(c) = Auto Shut-Off; §130.1(d) = Mandatory Daylight; §130.1(e) = Demand Responsive; §140.6(d) = Additional lighting controls installed to earn a PAF; §140.6(d) = Prescriptive Secondary Sidelit Daylight Controls.

2. Check Table 140.6-A for correct Factor. PAFs shall not be traded between conditioned and unconditioned spaces. As a condition to earn a PAF, an Installation Certificate is also required to be filled out, signed, and submitted.

CERTIFICATE OF COMPLIANCE	NRCC-LTI-02-E
Indoor Lighting - Lighting Controls	(Page 3 of 3)
Project Name: Westlake Village Park RR	Date Prepared: 3/28/2016

DOCUMENTATION AUTHOR'S DECLARATION STATEMENT

1. I certify that this Certificate of Compliance documentation is accurate and complete.

Documentation Author Name:	Adrian Starr	Documentation Author Signature:	
Company:	A 5 Starr Energy Corporation	Signature Date:	3/28/2016
Address:	2809 Bechelli Lane	CEA Certification Identification (if applicable):	
City/State/Zip:	Redding, CA 96002	Phone:	530-275-3350

RESPONSIBLE PERSON'S DECLARATION STATEMENT

I certify the following under penalty of perjury, under the laws of the State of California:

1. The information provided on this Certificate of Compliance is true and correct.
2. I am eligible under Division 3 of the Business and Professions Code to accept responsibility for the building design or system design identified on this Certificate of Compliance (responsible designer).
3. The energy features and performance specifications, materials, components, and manufactured devices for the building design or system design identified on this Certificate of Compliance conform to the requirements of Title 24, Part 1 and Part 6 of the California Code of Regulations.
4. The building design features or system design features identified on this Certificate of Compliance are consistent with the information provided on other applicable compliance documents, worksheets, calculations, plans and specifications submitted to the enforcement agency for approval with this building permit application.
5. I will ensure that a completed signed copy of this Certificate of Compliance shall be made available with the building permit(s) issued for the building, and made available to the enforcement agency for all applicable inspections. I understand that a completed signed copy of this Certificate of Compliance is required to be included with the documentation the builder provides to the building owner at occupancy.

Responsible Designer Name:	Nabil (Bill) Taha	Responsible Designer Signature:	
Company :	Precision Structural Engineering, Inc.	Date Signed:	3-28-16
Address:	250 Main St. Ste. A	License:	C60802
City/State/Zip:	Klamath Falls, Oregon 97601	Phone:	541-850-6300

STATE OF CALIFORNIA

INDOOR LIGHTING POWER ALLOWANCE

CEC-NRCC-LTI-03-E (Revised 05/15)

CALIFORNIA ENERGY COMMISSION

CERTIFICATE OF COMPLIANCE	NRCC-LTI-03-E
Certificate of Compliance - Indoor Lighting Power Allowance	(Page 1 of 4)
Project Name: Westlake Village Park RR	Date Prepared: 3/28/2016

A separate page must be filled out for Conditioned and Unconditioned Spaces. This page is only for:

☐ CONDITIONED spaces ☑ UNCONDITIONED spaces

A. SUMMARY TOTALS OF LIGHTING POWER ALLOWANCES

☐ If using Complete Building Method for compliance, use only the total in column (a) as total allowed building watts.

☐ If using Area Category Method, Tailored Method, or a combination of Area Category and Tailored Method for compliance, use only the total in column (b) as the total allowed building watts

	(a)		(b)
1. Complete Building Method Allowed Watts. Documented in section B of NRCC-LTI-03-E (below on this page)	1,032		
2. Area Category Method Allowed Watts. Documented in section C-1 of NRCC-LTI-03-E (below on this page)			
3. Tailored Method Allowed Watts. Documented in section A of NRCC-LTI-04-E			
TOTAL ALLOWED BUILDING WATTS. Enter number into correct cell on NRCC-LTI-01, Page 2, Row 1	1,032		

☐ Check here if building contains both conditioned and unconditioned areas.

B. COMPLETE BUILDING METHOD LIGHTING POWER ALLOWANCE

1	2		3		4
TYPE OF BUILDING (From §140.6 Table 140.6-B)	WATTS PER (ft^2)	X	COMPLETE BLDG. AREA	=	ALLOWED WATTS
Comp Bldg Auditorium	1.50		688		1,032
	Total Area:				
Total Watts. Enter Total Watts into section A, row 1 (Above on this page)					

C -1 AREA CATEGORY METHOD TOTAL LIGHTING POWER ALLOWANCES (D plus E)	Watts
Total from section C-2 .	
Total from section C-3 .	
Total Watts. Enter Total Watts into section A, row 2 (Above on this page) .	

CERTIFICATE OF COMPLIANCE	NRCC-LTI-03-E
Certificate of Compliance - Indoor Lighting Power Allowance	(Page 2 of 4)
Project Name: Westlake Village Park RR	Date Prepared: 3/28/2016

A separate page must be filled out for Conditioned and Unconditioned Spaces. This page is only for:

☐ CONDITIONED spaces ☑ UNCONDITIONED spaces

C -2 AREA CATEGORY METHOD GENERAL LIGHTING POWER ALLOWANCE

☐ Do not include portable lighting for offices. Portable lighting for offices shall be documented only in section B of NRCC-LTI-01-E.

☐ Separately list lighting for each primary function area as defined in §100.1 of the Standards.

A		B		C		D
AREA CATEGORY (From §140.6 Table 140.6-C)		WATTS				ALLOWED
Location in Building	Primary Function Area per Table 140.6-C	PER (ft^2)	X	AREA (ft^2)	=	WATTS
		TOTALS		0		
Enter sum total Area Category allowed watts into section C-1 of NRCC-LTI-03-E (this compliance form)						0
						WATTS

Project Name: Westlake Village Park RR

Date Prepared: 3/28/2016

A separate page must be filled out for Conditioned and Unconditioned Spaces. This page is only for:

☐ CONDITIONED spaces ☑ UNCONDITIONED spaces

C-3 AREA CATEGORY METHOD ADDITIONAL LIGHTING WATTAGE ALLOWANCE (from Table 140.6-C Footnotes)

A	B	C [2]	D	E	F	G
Primary Function	Sq Ft or linear ft [1]	Additional Watts Allowed	Wattage Allowance (B x C)	Description(s) and Quantity of Special Luminaire Types in each Primary Function Area	Total Design Watts [3]	ALLOWED WATTS Smaller of D or F
				TOTALS – Enter into TOTAL AREA CATEGORY METHOD ADDITIONAL ALLOWANCES – Section C-1		0

1. Use linear feet only for additional allowance for white board or chalk board. All other additional Area Category allowances shall use watts per square foot.
2. Additional watts are available only when allowed according to the footnotes on bottom of Table 146-C, which include: Specialized task work; Ornamental lighting; Precision commercial and industrial work; Per linear foot of white board or chalk board; Accent, display and feature lighting; and Videoconferencing Studio lighting..
3. Luminaire classification and wattage shall be determined in accordance with §130.0(c) of the Standards.

CERTIFICATE OF COMPLIANCE	NRCC-LTI-03-E
Certificate of Compliance - Indoor Lighting Power Allowance	(Page 4 of 4)
Project Name: Westlake Village Park RR	Date Prepared: 3/28/2016

DOCUMENTATION AUTHOR'S DECLARATION STATEMENT

1. I certify that this Certificate of Compliance documentation is accurate and complete.

Documentation Author Name:	Adrian Starr	Documentation Author Signature:	
Company:	A 5 Starr Energy Corporation	Signature Date:	3/28/2016
Address:	2809 Bechelli Lane	CEA Certification Identification (if applicable):	
City/State/Zip:	Redding, CA 96002	Phone:	530-275-3350

RESPONSIBLE PERSON'S DECLARATION STATEMENT

I certify the following under penalty of perjury, under the laws of the State of California:

1. The information provided on this Certificate of Compliance is true and correct.
2. I am eligible under Division 3 of the Business and Professions Code to accept responsibility for the building design or system design identified on this Certificate of Compliance (responsible designer).
3. The energy features and performance specifications, materials, components, and manufactured devices for the building design or system design identified on this Certificate of Compliance conform to the requirements of Title 24, Part 1 and Part 6 of the California Code of Regulations.
4. The building design features or system design features identified on this Certificate of Compliance are consistent with the information provided on other applicable compliance documents, worksheets, calculations, plans and specifications submitted to the enforcement agency for approval with this building permit application.
5. I will ensure that a completed signed copy of this Certificate of Compliance shall be made available with the building permit(s) issued for the building, and made available to the enforcement agency for all applicable inspections. I understand that a completed signed copy of this Certificate of Compliance is required to be included with the documentation the builder provides to the building owner at occupancy.

Responsible Designer Name:	Nabil (Bill) Taha	Responsible Designer Signature:	
Company :	Precision Structural Engineering, Inc.	Date Signed:	3-28-16
Address:	250 Main St. Ste. A	License:	C60802
City/State/Zip:	Klamath Falls, Oregon 97601	Phone:	541-850-6300

CERTIFICATE OF COMPLIANCE	NRCC-LTO-01-E
Outdoor Lighting	(Page 1 of 4)
Project Name: Westlake Village Park RR	Date Prepared: 3/28/2016

Project Address: 31107 East Thousand Oaks Blvd. Westlake Village, CA 91361	Total Illuminated Hardscape Area 0

General Information

Phase of Construction: ☑ New Construction ☐ Addition ☐ Alteration

Outdoor Lighting Zone (OLZ) ☐ OLZ-1 ☐ OLZ-2 ☑ OLZ-3 ☐ OLZ-4

I have confirmed with the AHJ which OLZ applies to this site. For default lighting zone designations, see Title 24 Part 6, §10-114

LIGHTING COMPLIANCE DOCUMENTS (check box for each document included)

For detailed instructions on the use of this and all Energy Efficiency Standards compliance documents, refer to the Nonresidential Manual published by the California Energy Commission.

☑	NRCC-LTO-01-E	Certificate of Compliance
☑	NRCC-LTO-02-E	Outdoor Lighting Controls Certificate of Compliance
☑	NRCC-LTO-03-E	Outdoor Lighting Power Allowance Certificate of Compliance

Summary of Allowed Outdoor Lighting Power			Watts
1.	**Sum Total ALLOWED** Outdoor Lighting Wattage from NRCC-LTO-03-E, page 1	=	210
	Complies ONLY if **Installed ≤ Allowed**		↕
2.	**Sum Total INSTALLED** Outdoor lighting Wattage from NRCC-LTO-01-E, page 3		210

Declaration of Required Installation Certificates – Declare by checking all Installation Certificates that will be submitted. (Retain copies and verify forms are completed and signed.)

☑ NRCI-LTO-01-E - Must be submitted for all buildings	☐ Field Inspector
☑ NRCI-LTO-02-E - Must be submitted for a lighting control system, or for an Energy Management Control System (EMCS), to be recognized for compliance.	☐ Field Inspector

Declaration of Required Certificates of Acceptance – Declare by checking all of the Certificates of Acceptance that will be submitted. (Retain copies and verify forms are completed and signed.)

☑ NRCA-LTO-02-A - Must be submitted for outdoor lighting controls.	☐ Field Inspector

Schedule of luminaires exempt from the outdoor lighting power requirements in §140.7	
Name or Symbol	Description of exempt luminaire in accordance with the exemptions

Schedule of luminaires exempt from the cutoff requirements in §130.2(b)	
Name or Symbol	Description of exempt luminaire in accordance with the exemptions

Schedule of luminaires exempt from the outdoor lighting control requirements in §130.2(c)	
Name or Symbol	Description of exempt luminaire in accordance with the exemptions

Project Name: Westlake Village Park RR | Date Prepared: 3/28/2016

A. OUTDOOR LIGHTING SCHEDULE and FIELD INSPECTION ENERGY CHECKLIST

Luminaire Schedule		Installed Watts					Location	Cutoff	Field Inspector	
A	B	C	D		E	F	G	H	I	
Name or Item Tag	Complete Luminaire Description	Watts per Luminaire	How wattage was determined: CEC Default from NA8	How wattage was determined: According to §130.0(c)	Number of Luminaires	Total Installed Watts in this area (C x E)	Primary Function area in which these luminaires are installed	BUG Rating	Pass	Fail
LF-1	OWP3 42F Lithonia	42.0	☑	☐	5	210	Main Entrance		☐	☐
			☐	☐					☐	☐
			☐	☐					☐	☐
			☐	☐					☐	☐
			☐	☐					☐	☐
			☐	☐					☐	☐
			☐	☐					☐	☐
			☐	☐					☐	☐
			☐	☐					☐	☐
			☐	☐					☐	☐
			☐	☐					☐	☐
			☐	☐					☐	☐
			☐	☐					☐	☐
			☐	☐					☐	☐
			☐	☐					☐	☐
			☐	☐					☐	☐
			☐	☐					☐	☐
			☐	☐					☐	☐
			☐	☐					☐	☐
			☐	☐					☐	☐
				INSTALLED WATTS PAGE TOTAL:		210	Enter sum total of all pages (**Sum Total INSTALLED** Outdoor lighting wattage) into NRCC-LTO-01-E; Page 1		210	

Project Name: Westlake Village Park RR	Date Prepared: 3/28/2016

DOCUMENTATION AUTHOR'S DECLARATION STATEMENT

1. I certify that this Certificate of Compliance documentation is accurate and complete.

Documentation Author Name:	Adrian Starr	Documentation Author Signature:	
Company:	A 5 Starr Energy Corporation	Signature Date:	3/28/2016
Address:	2809 Bechelli Lane	CEA Certification Identification (if applicable):	
City/State/Zip:	Redding, CA 96002	Phone:	530-275-3350

RESPONSIBLE PERSON'S DECLARATION STATEMENT

I certify the following under penalty of perjury, under the laws of the State of California:

1. The information provided on this Certificate of Compliance is true and correct.
2. I am eligible under Division 3 of the Business and Professions Code to accept responsibility for the building design or system design identified on this Certificate of Compliance (responsible designer).
3. The energy features and performance specifications, materials, components, and manufactured devices for the building design or system design identified on this Certificate of Compliance conform to the requirements of Title 24, Part 1 and Part 6 of the California Code of Regulations.
4. The building design features or system design features identified on this Certificate of Compliance are consistent with the information provided on other applicable compliance documents, worksheets, calculations, plans and specifications submitted to the enforcement agency for approval with this building permit application.
5. I will ensure that a completed signed copy of this Certificate of Compliance shall be made available with the building permit(s) issued for the building, and made available to the enforcement agency for all applicable inspections. I understand that a completed signed copy of this Certificate of Compliance is required to be included with the documentation the builder provides to the building owner at occupancy.

Responsible Designer Name:	Nabil (Bill) Taha	Responsible Designer Signature:	
Company :	Precision Structural Engineering, Inc.	Date Signed:	3-28-16
Address:	250 Main St. Ste. A	License:	C60802
City/State/Zip:	Klamath Falls, Oregon 97601	Phone:	541-850-6300

The NRCC-LTO-02-E shall be used to document all mandatory outdoor lighting controls that are applicable to the project.

Mandatory Outdoor Lighting Control Declaration Statements

Check all that apply:

- ☐ Lighting shall be controlled by self-contained lighting control devices which are certified to the Energy Commission according to the Title 20 Appliance Efficiency Regulations in accordance with §110.9(a).
- ☐ Lighting shall be controlled by a lighting control system or energy management control system in accordance with §110.9. An Installation Certificate shall be submitted in accordance with §130.4(b).
- ☑ All lighting controls and equipment shall comply with the applicable requirements in §110.9 and shall be installed in accordance with the manufacturer's instructions in accordance with §130.1
- ☐ Part-Night Outdoor Lighting Controls, as defined in Section 100.1(b), shall meet the requirements in Section 110.9(b)5
- ☐ All outdoor incandescent luminaires rated over 100 watts, determined in accordance with Section 130.0(c), shall be controlled by a motion sensor.
- ☐ All outdoor luminaires rated for use with lamps greater than 150 lamp watts, determined in accordance with Section 130.0(c), shall comply with Backlight, Uplight, and Glare (collectively referred to as "BUG") in accordance with Section 130.2(b)
- ☐ All installed outdoor lighting shall be controlled by a photocontrol or outdoor astronomical time-switch control in accordance with Section 130.2(c)1
- ☑ All installed outdoor lighting shall be circuited and independently controlled from other electrical loads by an automatic scheduling control in accordance with Section 130.2(c)2
- ☐ All installed outdoor lighting, where the bottom of the luminaire is mounted 24 feet or less above the ground, shall be controlled with automatic lighting controls in accordance with Section 130.2(c)3
- ☐ For Outdoor Sales Frontage, Outdoor Sales Lots, and Outdoor Sales Canopies lighting, an automatic lighting control in accordance with Section 130.2(c)4
- ☐ For Building Facade, Ornamental Hardscape and Outdoor Dining lighting, an automatic lighting control in accordance with Section 130.2(c)5
- ☑ Before an occupancy permit is granted for a newly constructed building or area, or a new lighting system serving a building, area, or site is operated for normal use, indoor lighting controls serving the building, area, or site shall be certified as meeting the Acceptance Requirements for Code Compliance in accordance with §130.4.(a). Outdoor lighting controls shall comply with the applicable requirements of Section 130.2(c) and Reference Nonresidential Appendix NA7.8

Project Name: Westlake Village Park RR

Date Prepared: 3/28/2016

MANDATORY OUTDOOR LIGHTING CONTROL SCHEDULE and FIELD INSPECTION CHECKLIST

Outdoor Lighting Control Schedule			Standards Complying With (✓ all that apply, or enter 'E' if Exempted)						✓ If Acceptance Test Required	Field Inspector	
A	B	C	D	E	F	G	H	I	N	O	
Location and Application of Luminaires being controlled	Type/ Description of Lighting Control (i.e. motion sensor, photocontrol, outdoor astronomical time-switch control, centralized time-based zone lighting control)	# of Units	§130.2(a)	§130.2(c)1	§130.2(c)2	§130.2(c)3	§130.2(c)4	§130.2(c)5		Pass	Fail
										☐	☐
										☐	☐
										☐	☐
										☐	☐
										☐	☐
										☐	☐
										☐	☐
										☐	☐
										☐	☐
										☐	☐
										☐	☐
										☐	☐
										☐	☐
										☐	☐
										☐	☐
										☐	☐
										☐	☐

CERTIFICATE OF COMPLIANCE	NRCC-LTO-02-E
Outdoor Lighting Controls	(Page 3 of 3)
Project Name: Westlake Village Park RR	Date Prepared: 3/28/2016

DOCUMENTATION AUTHOR'S DECLARATION STATEMENT

1. I certify that this Certificate of Compliance documentation is accurate and complete.

Documentation Author Name: Adrian Starr	Documentation Author Signature:
Company: A 5 Starr Energy Corporation	Signature Date: 3/28/2016
Address: 2809 Bechelli Lane	CEA Certification Identification (if applicable):
City/State/Zip: Redding, CA 96002	Phone: 530-275-3350

RESPONSIBLE PERSON'S DECLARATION STATEMENT

I certify the following under penalty of perjury, under the laws of the State of California:

1. The information provided on this Certificate of Compliance is true and correct.
2. I am eligible under Division 3 of the Business and Professions Code to accept responsibility for the building design or system design identified on this Certificate of Compliance (responsible designer).
3. The energy features and performance specifications, materials, components, and manufactured devices for the building design or system design identified on this Certificate of Compliance conform to the requirements of Title 24, Part 1 and Part 6 of the California Code of Regulations.
4. The building design features or system design features identified on this Certificate of Compliance are consistent with the information provided on other applicable compliance documents, worksheets, calculations, plans and specifications submitted to the enforcement agency for approval with this building permit application.
5. I will ensure that a completed signed copy of this Certificate of Compliance shall be made available with the building permit(s) issued for the building, and made available to the enforcement agency for all applicable inspections. I understand that a completed signed copy of this Certificate of Compliance is required to be included with the documentation the builder provides to the building owner at occupancy.

Responsible Designer Name: Nabil (Bill) Taha	Responsible Designer Signature:
Company: Precision Structural Engineering, Inc.	Date Signed: 3-28-16
Address: 250 Main St. Ste. A	License: C60802
City/State/Zip: Klamath Falls, Oregon 97601	Phone: 541-850-6300

OUTDOOR LIGHTING POWER ALLOWANCES

CEC-NRCC-LTO-03-E (Revised 05/15)

CALIFORNIA ENERGY COMMISSION

CERTIFICATE OF COMPLIANCE	NRCC-LTO-03-E
Outdoor Lighting Power Allowances	(Page 1 of 4)
Project Name: Westlake Village Park RR	Date Prepared: 3/28/2016

A. OUTDOOR LIGHTING POWER ALLOWANCE SUMMARY

1. General Hardscape Lighting Power Allowance (Site Total from Section B of NRCC-LTO-03-E)	1.	0

2. Additional Specific "use it or lose it" Lighting Power Allowances listed in each of these cells shall be identical to total allowed watts determined in Section C-1 to C-4 of NRCC-LTO-03-E.

PER APPLICATION from Section C-1		PER UNIT LENGTH (SALES FRONTAGE) from Section C-2		PER HARDSCAPE AREA (ORNAMENTAL LIGHTING) from Section C-3		PER SPECIFIC AREA from Section C-4.			
210	+	0	+	0	+	0	=	2.	210
3. **Sum Total ALLOWED** Outdoor Lighting Wattage (add rows 1 and 2)								3.	210

B. GENERAL HARDSCAPE LIGHTING POWER ALLOWANCE FROM TABLE 140.7-A

Area Wattage Allowance (AWA)				Linear Wattage Allowance (LWA)			Initial Wattage Allowance (IWA)	Total General Hardscape Lighting Allowance
A	B	C	D	E	F	G	H	I
Name of area	Illuminated Hardscape Area	AWA Per Square Foot	AWA (B x C)	Perimeter Length of General Hardscape	LPA per Linear Foot	LWA (E x F)	IWA (Watts)	D + G + H
							TOTAL	0

C. ADDITIONAL "USE IT OR LOSE IT" OUTDOOR LIGHTING POWER ALLOWANCES FOR SPECIFIC APPLICATIONS

☐ The additional specific outdoor lighting power allowance shall be the smaller of the allowed lighting power or the actual lighting power used.

☐ Use Outdoor Lighting Zone (OLZ) that is documented on page 1 of NRCC-LTO-01-E to calculate the specific wattage allowances.

C-1. WATTAGE ALLOWANCE PER APPLICATION – Table 140.7-B

☐ Available only for qualifying locations, which include Building Entrances or Exits; Primary Entrances to Senior Care Facilities, Police Stations, Hospitals, Fire Stations, and Emergency Vehicle Facilities; Drive Up Windows; Vehicle Service Station Uncovered Fuel Dispenser

☐ If more than one luminaire type is used per location, use multiple rows for that location

A	B	C	D	E	F	G	H	I	J
	ALLOTTED WATTS			DESIGN WATTS					
Name of Location for which allowance is claimed	Number of qualifying locations	Wattage Allowance per qualifying location	Allotted Watts (B x C)	Luminaire Code or Symbol	Luminaire Description	Luminaire Quantity	Watts per luminaire	Design Watts (G x H)	Allowed Watts (smaller of D or I)
Left Main Entrance	2	90	180	LF-1	OWP3 42F Lithonia	2	42.0	84	84
Right Main Entrance	3	90	270	LF-1	OWP3 42F Lithonia	3	42.0	126	126
								Sum total allowance per application on this site:	210

C-2. WATTAGE ALLOWANCE PER UNIT LENGTH (Sales Frontage) from Table 140.7-B

☐ If more than one luminaire type is used per location, use multiple rows for that location

A	B	C	D	E	F	G	H	I	J
	ALLOTTED WATTS			DESIGN WATTS					
Name of Location for which allowance is claimed	Linear feet of Sales Frontage	Wattage Allowance per linear foot	Allotted Watts (B x C)	Luminaire Code or Symbol	Luminaire Description	Luminaire Quantity	Watts per luminaire	Design Watts (G x H)	Allowed Watts (smaller of D or I)
								Sum total allowance for sales frontage on the site:	0

C-3. WATTAGE ALLOWANCE PER SQUARE FOOT OF HARDSCAPE AREA (Ornamental Lighting) – Table 140.7-B

☐ Allowance for the total site illuminated hardscape area. Luminaires qualifying for this allowance shall be rated for 100 watts or less as determined in accordance with Section 130.0(c), and shall be post-top luminaires, lanterns, pendant luminaires, or chandeliers.

☐ If more than one luminaire type is used per location, use multiple rows for that location

A	B	C	D	E	F	G	H	I	J
	ALLOTTED WATTS			DESIGN WATTS					
Name of area for which ornamental allowance is claimed	Square feet of Hardscape	Wattage Allowance per square foot	Allotted Watts (B x C)	Luminaire Code or Symbol	Luminaire Description	Luminaire Quantity	Watts per luminaire	Design Watts (G x H)	Allowed Watts (smaller of D or I)
								Sum total allowance for ornamental lighting on the site:	0

C-4. WATTAGE ALLOWANCE PER SQUARE FOOT OF SPECIFIC AREA - Table 140.7-B

☐ Allowances for Building Facades; Outdoor Sales Lots; Vehicle Service Station Hardscape; Vehicle Service Station Canopies; Sales Canopies; Non-sales Canopies; Guard Stations; Student Pick-up/Drop-off zone: Outdoor Dining; Special Security Lighting for Retail Parking and Pedestrian Hardscape.

☐ If more than one luminaire type is used per location, use multiple rows for that location

A	B	C	D	E	F	G	H	I	J
	ALLOTTED WATTS			DESIGN WATTS					
Name of Location for which allowance is claimed	Illuminated Area of Application	Wattage Allowance per square foot	Allotted Watts (B x C)	Luminaire Code or Symbol	Luminaire Description	Luminaire Quantity	Watts per luminaire	Design Watts (G x H)	Allowed Watts (smaller of D or I)
								Sum total allowance for specific area on the site:	0

CERTIFICATE OF COMPLIANCE	NRCC-LTO-03-E
Outdoor Lighting Power Allowances	(Page 4 of 4)
Project Name: Westlake Village Park RR	Date Prepared: 3/28/2016

DOCUMENTATION AUTHOR'S DECLARATION STATEMENT

1. I certify that this Certificate of Compliance documentation is accurate and complete.

Documentation Author Name:	Adrian Starr	Documentation Author Signature:	
Company:	A 5 Starr Energy Corporation	Signature Date:	3/28/2016
Address:	2809 Bechelli Lane	CEA Certification Identification (if applicable):	
City/State/Zip:	Redding, CA 96002	Phone:	530-275-3350

RESPONSIBLE PERSON'S DECLARATION STATEMENT

I certify the following under penalty of perjury, under the laws of the State of California:

1. The information provided on this Certificate of Compliance is true and correct.
2. I am eligible under Division 3 of the Business and Professions Code to accept responsibility for the building design or system design identified on this Certificate of Compliance (responsible designer).
3. The energy features and performance specifications, materials, components, and manufactured devices for the building design or system design identified on this Certificate of Compliance conform to the requirements of Title 24, Part 1 and Part 6 of the California Code of Regulations.
4. The building design features or system design features identified on this Certificate of Compliance are consistent with the information provided on other applicable compliance documents, worksheets, calculations, plans and specifications submitted to the enforcement agency for approval with this building permit application.
5. I will ensure that a completed signed copy of this Certificate of Compliance shall be made available with the building permit(s) issued for the building, and made available to the enforcement agency for all applicable inspections. I understand that a completed signed copy of this Certificate of Compliance is required to be included with the documentation the builder provides to the building owner at occupancy.

Responsible Designer Name:	Nabil (Bill) Taha	Responsible Designer Signature:	
Company :	Precision Structural Engineering, Inc.	Date Signed:	3-28-16
Address:	250 Main St. Ste. A	License:	C60802
City/State/Zip:	Klamath Falls, Oregon 97601	Phone:	541-850-6300

Precision Structural Engineering, Inc.

STRUCTURAL ENGINEERING CALCULATIONS

PROJECT: Westlake Village Park Restroom 18650

PROJECT LOCATION: 31107 E. Thousand Oaks Blvd.
Westlake Village, CA

PSE PROJECT NUMBER: Romtec 216-23

DATE: March 28, 2016

3-28-16

REGISTERED PROFESSIONAL ENGINEER
NABIL M. TAHA
C40809
EXP. 12-16
CIVIL
STATE OF CALIFORNIA

BY: Nabil Taha, Ph.D., P.E.

250-A Main Street
Klamath Falls, OR. 97601

E-Mail: info@structure1.com
Web: www.structure1.com

ph. (541) 850-6300
fax (541) 850-6233

Table of Contents:

Subject:	Page:
1- References / Software:	10-19
2- Design Criteria:	100-199
3- Roof Framing Analysis & Design:	1,000 – 1,999
4- First Floor Framing / Foundation Analysis & Design:	2,000 – 2,999
5- Lateral Analysis & Design:	3,000 – 3,999

250-A Main Street
Klamath Falls, OR. 97601

E-Mail: info@structure1.com
Web: www.structure1.com

ph. (541) 850-6300
fax (541) 850-6233

Precision Structural Engineering, Inc.

References:

1- Literature:

a. 2013 California Building Code, (CBC) based on the 2012 International Building Code (IBC).

b. Design of Wood Structures, Donald E. Breyer 4th ED.

c. Masonry Designers' Guide, TMC 5th Edition

2- Software:

a. RISA 3D Version 12.0, RISA Technologies

b. RISA Foot Version 4.0, RISA Technologies

c. Wood Works Design Office Version 10.0, American Forest & Paper Association

250-A Main Street
Klamath Falls, OR. 97601

E-Mail: info@structure1.com
Web: www.structure1.com

ph. (541) 850-6300
fax (541) 850-6233

Precision Structural Engineering, Inc.

Design Criteria:

1- Location:	31107 E. Thousand Oaks Blvd. Westlake Village, CA (Lat. 34° 09' 29" Long. 118° 48' 01")	
2- Seismic:	RC	II
	SDC	D
	Site Class	D
	S_{ms}	1.500
	S_{m1}	0.600
	S_{DS}	1.000
	S_{D1}	0.600
	I_E	1.0
	R	5
3- Wind (Ultimate):	Basic wind speed	110 mph (3s.gust)
	Exposure	C
	RC	II
4- Roof Live Load:	20 psf	
5- Soil Bearing Capacity:	1500 psf (assumed)	
6- Gravity Loads:	DL Floor:	15 psf
	LL Floor:	40 psf
	DL Roof:	15 psf
	Exterior Walls:	81 psf
7- Deflection Criteria:	Floor LL Deflection:	L/480
	Roof TL Deflection:	L/180

**Other criteria assumed as stated in design calculations.

250-A Main Street
Klamath Falls, OR. 97601

E-Mail: info@structure1.com
Web: www.structure1.com

ph. (541) 850-6300
fax (541) 850-6233

101

USGS Design Maps Summary Report

User–Specified Input

Report Title	Westlake Village Park Restroom Wed March 23, 2016 19:35:06 UTC
Building Code Reference Document	ASCE 7-10 Standard (which utilizes USGS hazard data available in 2008)
Site Coordinates	34.1579°N, 118.8004°W
Site Soil Classification	Site Class D – "Stiff Soil"
Risk Category	I/II/III

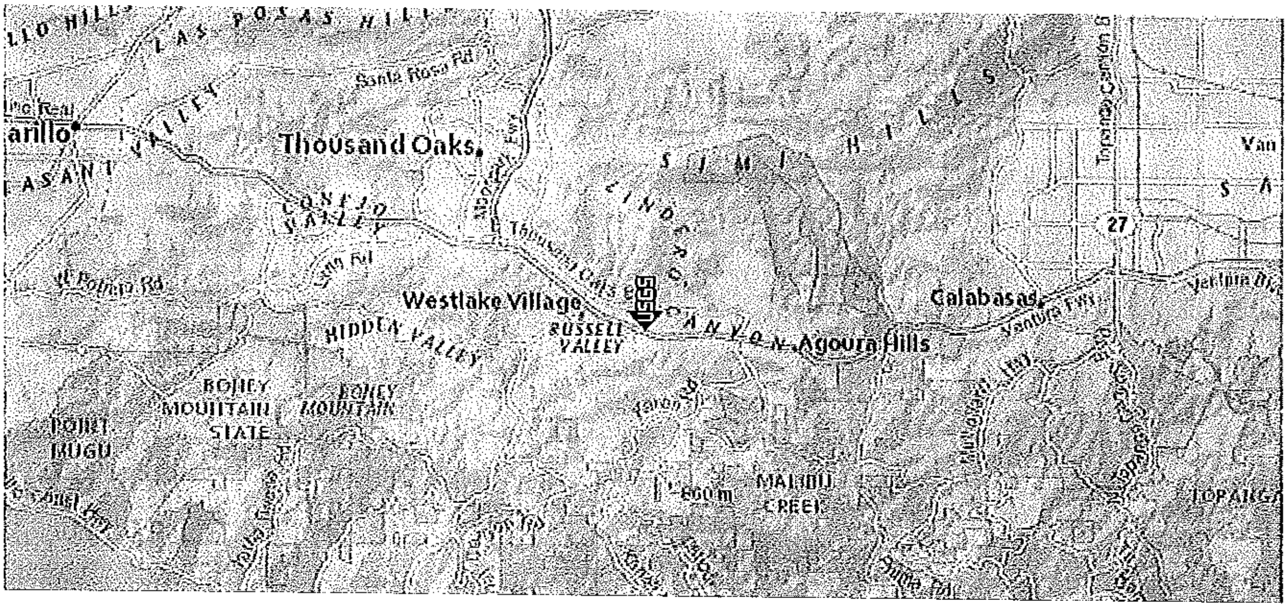

USGS–Provided Output

$S_S =$ 1.500 g	$S_{MS} =$ 1.500 g	$S_{DS} =$ 1.000 g
$S_1 =$ 0.600 g	$S_{M1} =$ 0.900 g	$S_{D1} =$ 0.600 g

For information on how the SS and S1 values above have been calculated from probabilistic (risk-targeted) and deterministic ground motions in the direction of maximum horizontal response, please return to the application and select the "2009 NEHRP" building code reference document.

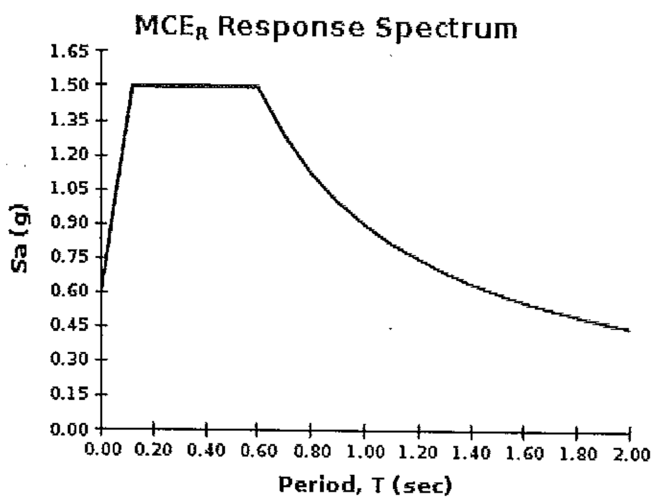

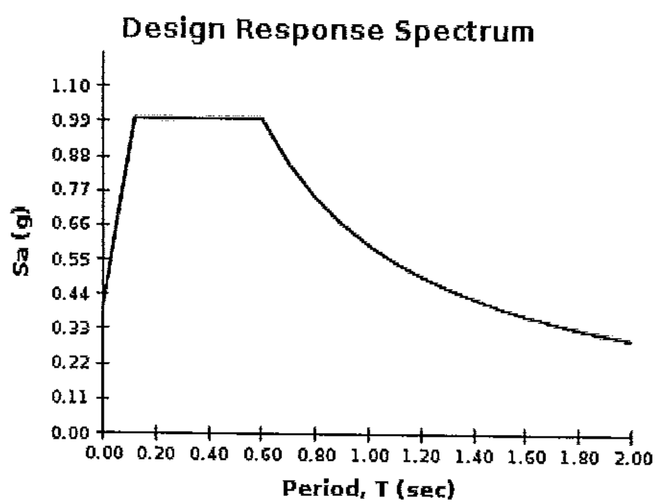

For PGA_M, T_L, C_{RS}, and C_{R1} values, please view the detailed report.

IBC SEISMIC DESIGN

EQUIVALENT LATERAL FORCE PROCEDURE

JOB NUMBER Romtec 216-23

DESIGNER RMH

Design Information

DATA	VALUE	SOURCE
S_1=	0.600	Seismic Design Parameters (Software)
S_{MS}=	1.500	Seismic Design Parameters (Software)
S_{M1}=	0.900	Seismic Design Parameters (Software)
I_E	1.0	ASCE 7-10 Table 1.5-2
Risk Category	2	ASCE 7-10 Table 1.5-1
R	5	ASCE 7-10 Table 12.2-1
h_n	15.75	Height per ASCE 7-10
C_t	0.02	ASCE 7-10 Table 12.8-2

S_{MS}: Max considered spectral response acceleration for short periods

S_{M1}: Max considered spectral response acceleration for 1-second period

I_E : Seismic importance factor

R: Response modification factor

1) Design spectral response acceleration

S_{DS}: 5% Damped spectral response acceleration at short periods

S_{D1}: 5% Damped spectral response acceleration at 1 second period

$S_{DS}=2/3(S_{ms})$ $S_{DS}=$ 2/3 X 1.5 $S_{DS}=$ 1.000 [IBC Eq. 16-39]

$S_{D1}=2/3(S_{m1})$ $S_{D1}=$ 2/3 X 0.9 $S_{D1}=$ 0.600 [IBC Eq. 16-40]

2) Seismic design category

From Table IBC 1613.3.5(1) : D

From Table IBC 1613.3.5(2) : D

Governing Design Category D

3) Determine design base shear (V)

Equivalent Force Procedure
[ASCE 7-10, 12.8.1]

$V= C_s \times W$

C_s : Seismic Response Coefficient

W : Total dead load and other applicable loads

A. [ASCE 7-10, 12.8.1.1, Eq. 12.8-2]

$$C_S = \frac{S_{DS}}{R/I} \qquad C_S = \frac{1.000}{5} 1.0 \qquad C_S = 0.200$$

B. Nor greater than

$$C_S = \frac{S_{D1}}{T(R/I)}$$ [ASCE 7-10, 12.8.1.1, Eq. 12.8-3]

$T = T_a = C_t(h_n^x)$ [ASCE 7-10, 12.8.2.1, Eq. 12.8-7]

$$C_S = \frac{0.600 \times 1}{0.158 \times 5}$$

$C_S=$ 0.759

T_a : Approximate Fundamental Period

$T=$ $0.020 \times 15.75^{0.75}$ $T=$ 0.158

C. Nor less than [ASCE 7-10, 12.8.1.1, Eq. 12.8-5]

$C_S = 0.044 (S_{DS})(I)$ $C_S = 0.044 \times 1 \times 1$ $C_S=$ 0.044

Governing C_s = 0.200

$V= Cs \times W$ $V = 0.2 \times W$ Refer to sheet two for W and Calculated V

IBC SEISMIC DESIGN

VERTICLE FORCE DISTRIBUTION EQUIVALENT LATERAL FORCE PROCEDURE

JOB NUMBER Romtec 216-23

DESIGNER RMH

1. Determine dead load at each level of building.

Structural portion		DL (PSF)	Area (SF)	Length (FT)	Height (FT)	Total Weight (LB)
a) Roof	Diaphram elevation from the base level in ft				8.7	
	Roof	15	856	NA	NA	12840
	Misc.	0	0	0	0	0
	Misc. (LBS)	0	NA	NA	NA	0
c) 5th floor	Diaphram elevation from the base level in ft				0	
	Ext. Walls	15	NA	0	0	0
	Int. Walls	10	NA	0	0	0
	Floor	15	0	NA	NA	0
	Misc.	0	0	0	0	0
	Misc. (LBS)	0	NA	NA	NA	0
d) 4th floor	Diaphram elevation from the base level in ft				0	
	Ext. Walls	15	NA	0	0	0
	Int. Walls	10	NA	0	0	0
	Floor	15	0	NA	NA	0
	Misc.	0	0	0	0	0
	Misc. (LBS)	0	NA	NA	NA	0
e) 3rd floor	Diaphram elevation from the base level in ft				0	
	Ext. Walls	15	NA	0	0	0
	Int. Walls	10	NA	0	0	0
	Floor	15	0	NA	NA	0
	Misc.	0	0	0	0	0
	Misc. (LBS)	0	NA	NA	NA	0
f) 2nd floor	Diaphram elevation from the base level in ft				0	
	Ext. Walls	0	NA	0	0	0
	Int. Walls	0	NA	0	0	0
	Floor	0	0	NA	NA	0
	Misc.	0	0	0	0	0
	Misc. (LBS)	0	NA	NA	NA	0
g) 1st floor	Ext. Walls	81	NA	165	8.7	116275.5
	Int. Walls	0	NA	0	0	0
	Misc.	0	0	0	0	0
				TOTAL DEAD LOAD (LB) =		129115.5

2) Determine verticle force distribution at each level ASCE 7-10 12.8-3

$F_x = C_{vx} \times V$ ASCE 7-10 Eq. 12.8-11

$$C_{vx} = \frac{w_x \times h_x^k}{\sum w_i h_i^k}$$ ASCE 7-10 Eq. 12.8-12

F_x: Lateral seismic force at any level

V: Seismic base shear (Kips)

w_x & w_i : The portion of the total gravity load of the structure (W) located or assigned to level i or x

h_x & h_x: The height (ft) from the base to level i or x diaphram.

k : An exponent related to the structures period (T) as follows;

$T \leq 0.5$ sec $k = 1$ $T \geq 2.5$ sec $k = 2$ $0.5 \leq T \leq 2.5$ Interpolate between 1 & 2

Refer to sheet one for V

V = 0.2 X W V = 0.2 X 129115.5 V= 25.823 (kips) T= 0.1581 k= 1

Level (floor)	Wall Height (ft)	Diaphram Height (Ft)	W_x (kips)	$W_x{*}h_x^k$	C_{vx}	F_x (kips)	Allowable F_x (kips)
Roof	8.7	8.7	70.978	618	1.000	25.82	18.45
5	0	0	0.000	0	0.000	0	0.00
4	0	0	0.000	0	0.000	0	0.00
3	0	0	0.000	0	0.000	0	0.00
2	0	0	0.000	0	0.000	0.00	0.00
			70.978	618	1.000	25.82	18.4

Note: The Total Shear shown in the right hand column is an "allowable" load.

ATC Applied Technology Council

WINDSPEED BY LOCATION

Search Results

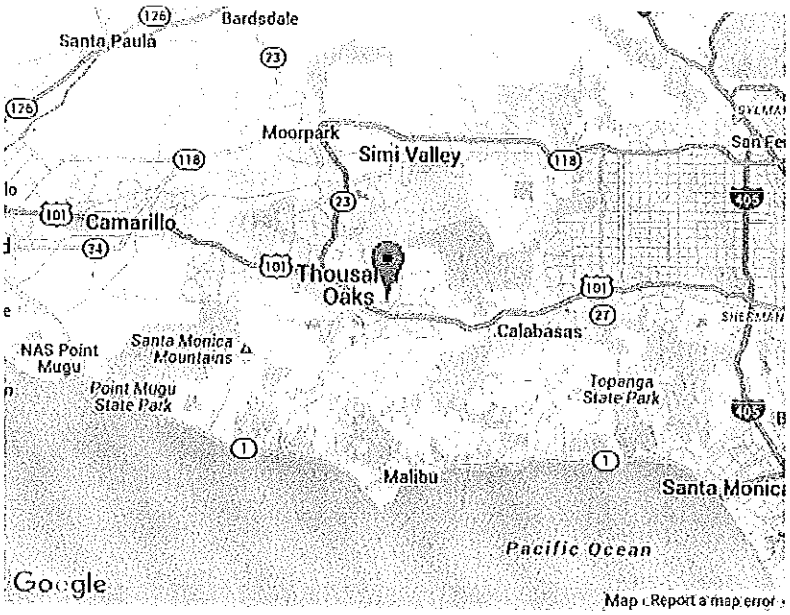

Query Date: Wed Mar 23 2016
Latitude: 34.1579
Longitude: -118.8004

ASCE 7-10 Windspeeds (3-sec peak gust in mph*):

Risk Category I: 100
Risk Category II: 110
Risk Category III-IV: 115
MRI 10-Year:** 72
MRI 25-Year:** 79
MRI 50-Year:** 85
MRI 100-Year:** 91

ASCE 7-05 Windspeed:
85 (3-sec peak gust in mph)
ASCE 7-93 Windspeed:
70 (fastest mile in mph)

*Miles per hour
**Mean Recurrence Interval

Users should consult with local building officials to determine if there are community-specific wind speed requirements that govern.

Print your results

WINDSPEED WEBSITE DISCLAIMER

While the information presented on this website is believed to be correct, ATC and its sponsors and contributors assume no responsibility or liability for its accuracy. The material presented in the windspeed report should not be used or relied upon for any specific application without competent examination and verification of its accuracy, suitability and applicability by engineers or other licensed professionals. ATC does not intend that the use of this information replace the sound judgment of such competent professionals, having experience and knowledge in the field of practice, nor to substitute for the standard of care required of such professionals in interpreting and applying the results of the windspeed report provided by this website. Users of the information from this website assume all liability arising from such use. Use of the output of this website does not imply approval by the governing building code bodies responsible for building code approval and interpretation for the building site described by latitude/longitude location in the windspeed load report.

MecaWind Pro v2.2.7.0 per ASCE 7-10

Developed by MECA Enterprises, Inc. Copyright www.mecaenterprises.com

Date	: 3/23/2016	Project No.	: JobNo
Company Name	: True	Designed By	: Engineer
Address	: Address	Description	: Description
City	: City	Customer Name	: Customer
State	: State	Proj Location	: Location

File Location: C:\Users\Ralph.Hall\AppData\Roaming\MecaWind\Default.wnd

Input Parameters: Directional Procedure All Heights Building (Ch 27 Part 1)

Basic Wind Speed(V)	=	110.00 mph			
Structural Category	=	II	Exposure Category	=	C
Natural Frequency	=	N/A	Flexible Structure	=	No
Importance Factor	=	1.00	Kd Directional Factor	=	0.85
Alpha	=	9.50	Zg	=	900.00 ft
At	=	0.11	Bt	=	1.00
Am	=	0.15	Bm	=	0.65
Cc	=	0.20	l	=	500.00 ft
Epsilon	=	0.20	Zmin	=	15.00 ft
Pitch of Roof	=	6 : 12	Slope of Roof(Theta)	=	26.57 Deg
h: Mean Roof Ht	=	11.50 ft	Type of Roof	=	HIPPED
RHt: Ridge Ht	=	14.50 ft	Eht: Eave Height	=	8.50 ft
OH: Roof Overhang at Eave	=	1.50 ft	Overhead Type	=	Overhang
Bldg Length Along Ridge	=	28.70 ft	Bldg Width Across Ridge	=	24.00 ft
Length of Hipped Ridge	=	4.50 ft	Roof Slope on Hip End	=	26.38 Deg

Gust Factor Calculations

Gust Factor Category I Rigid Structures - Simplified Method

Gust1: For Rigid Structures (Nat. Freq.>1 Hz) use 0.85 = 0.85

Gust Factor Category II Rigid Structures - Complete Analysis

Zm:	0.6*Ht	=	15.00 ft
lzm:	Cc*(33/Zm)^0.167	=	0.23
Lzm:	l*(Zm/33)^Epsilon	=	427.06 ft
Q:	(1/(1+0.63*((B+Ht)/Lzm)^0.63))^0.5	=	0.94
Gust2:	0.925*((1+1.7*lzm*3.4*Q)/(1+1.7*3.4*lzm))	=	0.89

Gust Factor Summary

Not a Flexible Structure use the Lessor of Gust1 or Gust2 = 0.85

Table 26.11-1 Internal Pressure Coefficients for Buildings, GCpi

GCPi : Internal Pressure Coefficient = +/-0.18

Wind Pressurs Main Wind Force Resisting System (MWFRS) - Ref Figure 27.4-1

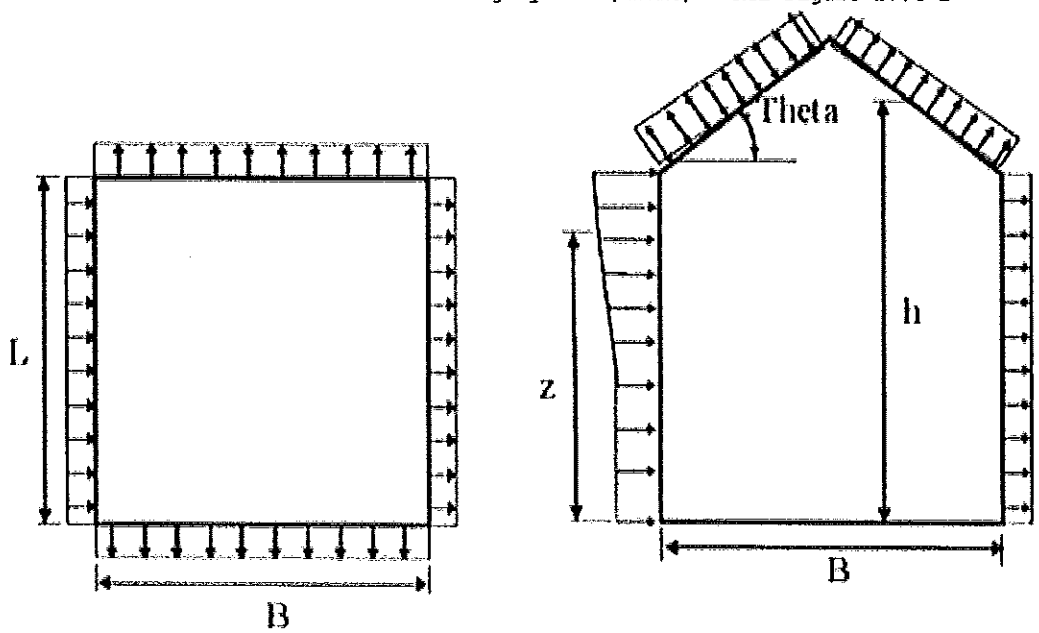

Kh: 2.01*(Ht/Zg)^(2/Alpha)	=	0.85
Kht: Topographic Factor (Figure 6-4)	=	1.00
Qh: .00256*(V)^2*I*Kh*Kht*Kd	=	13.41 psf
Cpww: Windward Wall Cp(Ref Fig 6-6)	=	0.80
Roof Area	=	813.33 ft^2
Reduction Factor based on Roof Area	=	0.82

MWFRS-Wall Pressures for Wind Normal to 28.7 ft Wall (Normal to Ridge)

All pressures shown are based upon ASD Design, with a Load Factor of .6

Wall	Cp	Pressure +GCpi (psf)	Pressure -GCpi (psf)
Leeward Wall	-0.50	-8.11	-3.29
Side Walls	-0.70	-10.39	-5.57

Wall	Elev ft	Kz	Kzt	Cp	qz psf	Press +GCpi	Press -GCpi	Total +/-GCpi
Windward	8.50	0.85	1.00	0.80	13.41	6.71	11.53	14.82

Roof Location	Cp	Pressure +GCpi(psf)	Pressure -GCpi(psf)
Windward - Min Cp	-0.26	-5.38	-0.55
Windward - Max Cp	0.21	-0.02	4.81
Leeward Norm to Ridge	-0.60	-9.25	-4.43 → 9.3
Hipped End (.00 to 5.75 ft)	-0.90	-12.67	-7.85
Hipped End (5.75 to 11.50 ft)	-0.90	-12.67	-7.85
Hipped End (11.50 to 23.00 ft)	-0.50	-8.11	-3.29
Hipped End (23.00 to 27.00 ft)	-0.30	-5.83	-1.01
Overhang Top (Windward)	-0.26	-2.96	-2.96
Overhang Top (Leeward)	-0.60	-6.84	-6.84
Overhang Top (Side Wall)(.00 to 5.75 ft)	-0.90	-10.26	-10.26
Overhang Top (Side Wall)(5.75 to 11.50 ft)	-0.90	-10.26	-10.26
Overhang Top (Side Wall)(11.50 to 23.00 ft)	-0.50	-5.70	-5.70
Overhang Top (23.00 to 24.00 ft)	-0.30	-3.42	-3.42
Overhang Bot (Windward only)	0.80	9.12	9.12

Notes - Normal to Ridge

Note (1) Per Fig 27.4-1 Note 7, Since Theta > 10 Deg base calcs on Mean Ht
Note (2) Wall & Roof Pressures = Qh*(G*Cp - GCPi)
Note (3) +GCpi = Positive Internal Bldg Press, -GCPi = Negative Internal Bldg Press
Note (4) Total Pressure = Leeward Press + Windward Press (For + or - GCPi)
Note (5) Hipped ends considered as parallel to ridge for all theta.
Note (6) Ref Fig 27.4-1, Normal to Ridge (Theta>=10), Theta= 26.6 Deg, h/l= 0.40
Note (7) No internal pressure considered (GCpi = 0) for Overhang
Note (8) Overhang bottom based upon windward wall Cp and GCpi = 0.
Note (9) X= Along Building ridge, Y = Normal to Building Ridge, Z = Vertical
Note (10) MIN = Minimum pressures on Walls = 9.6 psf and Roof = 4.8 psf
Note (11) Area* = Area of the surface projected onto a vertical plane normal to wind.

MWFRS-Wall Pressures for Wind Normal to 24 ft wall (Along Ridge)

All pressures shown are based upon ASD Design, with a Load Factor of .6

Wall	Cp	Pressure +GCpi (psf)	Pressure -GCpi (psf)
Leeward Wall	-0.46	-7.67	-2.84
Side Walls	-0.70	-10.39	-5.57

Wall	Elev ft	Kz	Kzt	Cp	qz psf	Press +GCpi	Press -GCpi	Total +/-GCpi
Windward	14.50	0.85	1.00	0.80	13.41	6.71	11.53	14.37
Windward	8.50	0.85	1.00	0.80	13.41	6.71	11.53	14.37

Roof - Dist from Windward Edge	Cp	Pressure +GCpi(psf)	Pressure -GCpi(psf)
Roof: 0.0 ft to 5.8 ft	-0.90	-12.67	-7.85
Roof: 5.8 ft to 11.5 ft	-0.90	-12.67	-7.85
Roof: 11.5 ft to 23.0 ft	-0.50	-8.11	-3.29
Roof: 23.0 ft to 31.7 ft	-0.30	-5.83	-1.01
OH Top : 0.0 ft to 5.8 ft	-0.90	-15.09	-15.09
Overhang Top : 5.8 ft to 11.5 ft	-0.90	-15.09	-15.09

Overhang Top : 11.5 ft to 23.0 ft	-0.50	-10.53	-10.53
Overhang Top : 23.0 ft to 31.7 ft	-0.30	-8.25	-8.25

Notes - Along Ridge

Note (1) OH = Overhang, no internal pressure considered for Overhang (GCpi=0)
Note (2) Ref Fig 27.4-1, Parallel to Ridge (All), h/l= 0.40
Note (3) X= Along Building ridge, Y = Normal to Building Ridge, Z = Vertical
Note (4) MIN = Minimum pressures on Walls = 9.6 psf and Roof = 4.8 psf
Note (5) Area* = Area of the surface projected onto a vertical plane normal to wind.

Precision Structural Engineering, Inc.

ROOF FRAMING ANALYSIS & DESIGN:

Pages 1,000 - 1,999

250-A Main Street
Klamath Falls, OR. 97601

E-Mail: info@structure1.com
Web: www.structure1.com

ph. (541) 850-6300
fax (541) 850-6233

Precision Structural Engineering, Inc.
250 Main Street, Suite A • Klamath Falls, OR 97601
Tel (541) 850-6300 • FAX (541) 850-6233

Medford Office
836 Mason Way (off Sage Road) • Medford, OR 97501
Tel (541) 858-8500

www.structure1.com • Email: info@structure1.com

PROJECT NO. Rontec 216-23 SHEET 1000 OF

PROJECT NAME Westlake Village Restroom DESIGNED BY RH DATE

SUBJECT Roof 18650 CHECKED BY DATE

Masonry Header

DL = 15 psf × 5.5 ft. = 83 plf
RLL = 20 psf × 5.5 ft = 110 plf

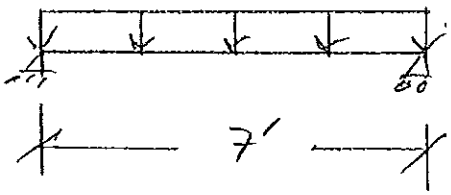

USE [8"×8" CMU w/ 1-#4 Bar]

PROJECT :	Westlake Village Park Restroom 18650		PAGE :
CLIENT :	Romtec		DESIGN BY : RMH
JOB NO. :	Romtec 216-23	DATE :	REVIEW BY :

Masonry Beam Design Based on TMS 402-11

INPUT DATA & DESIGN SUMMARY

SPECIAL INSPECTION (0=NO, 1=YES)			1	Yes
TYPE OF MASONRY (1=CMU, 2=BRICK)			1	CMU
MASONRY STRENGTH	f_m'	=	1.5	ksi
REBAR YIELD STRESS	f_y	=	60	ksi
ALLOWABLE INCREASING ? (IBC/CBC 1605.3.2)			No	
SERVICE SHEAR LOAD	V	=	0.68	k
SERVICE MOMENT LOAD	M	=	1.18	ft-k
WIDTH	b	=	8	in
EFFECTIVE DEPTH	d	=	5	in
CLEAR SPAN	Lc	=	7	ft
LOAD TYPE (1=SEISMIC, 0=WIND, 5=GRAVITY)			5	Gravity Only

VERTICAL REINF. 0 # 4 @ 8 in o.c.

TENSION REINFORCEMENT 1 # 4

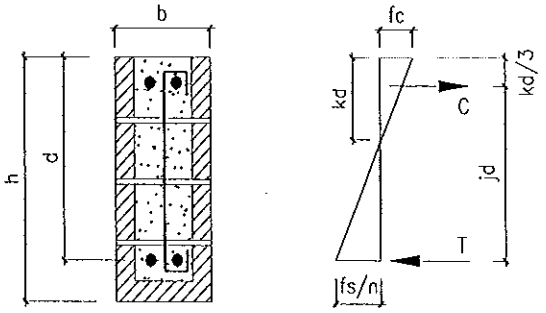

[THE BEAM DESIGN IS ADEQUATE.]

ANALYSIS

ALLOWABLE STRESS FACTOR	SF	=	1.000	
ALLOWABLE REINF. STRESS	(1.33 or 1.0) F_s	=	32	ksi
ALLOWABLE MASONRY STRESS	F_b=(SF)(0.33f_m')	=	0.495	ksi
MASONRY ELASTICITY MODULUS	E_m	=	1350	ksi, (TMS 402 1.8.2.2.1)
STEEL ELASTICITY MODULUS	E_s	=	29000	ksi, (TMS 402 1.8.2.1)
EFFECTIVE WIDTH	b_w	=	7.63	in [Satisfactory, Lc < 32 bw]
MODULAR RATIO	n	=	21.48	
TENSION REINFORCEMENT RATIO	ρ	=	0.005	

THE NEUTRAL AXIS DEPTH FACTOR IS

$$k = \sqrt{2\rho n + (\rho n)^2} - \rho n \quad = \quad 0.375$$

THE LEVER-ARM FACTOR IS

$$j = 1 - \frac{k}{3} \quad = 0.875$$

THE TENSILE STRESS IN REINFORCEMENT DUE TO FLEXURE IS

$$f_s = \frac{M}{A_s jd} \quad = \quad 16.2 \text{ ksi} \quad < \quad F_s \quad \text{[SATISFACTORY]}$$

THE COMPRESSIVE STRESS IN THE EXTREME FIBER DUE TO FLEXURE IS

$$f_b = \frac{2M}{jkb_w d^2} \quad = \quad 0.45 \text{ ksi} \quad < \quad F_b \quad \text{[SATISFACTORY]}$$

THE SHEAR STRESS IN MASONRY IS

$$f_v = \frac{V}{b_w d} \quad = \quad 17.8 \text{ psi} \quad < \quad F_v = MIN\left[(SF)1.125\sqrt{f_m'} + 0.5\left(\frac{A_v F_s d}{A_n S}\right) \;,\; (SF)2\sqrt{f_m'}\right]$$

(TSM 402-11 2.3.6)

$$= \quad 43.5711 \text{ psi} \quad \text{[SATISFACTORY]}$$

Precision Structural Engineering, Inc.

FIRST FLOOR FRAMING / FOUNDATION ANALYSIS & DESIGN:

Pages 2,000 - 2,999

250-A Main Street
Klamath Falls, OR. 97601

E-Mail: info@structure1.com
Web: www.structure1.com

ph. (541) 850-6300
fax (541) 850-6233

Precision Structural Engineering, Inc.
250 Main Street, Suite A • Klamath Falls, OR 97601
Tel (541) 850-6300 • FAX (541) 850-6233

Medford Office
836 Mason Way (off Sage Road) • Medford, OR 97501
Tel (541) 858-8500

www.structure1.com • Email: info@structure1.com

PROJECT NO. Romtec 216-23 SHEET 2000 OF

PROJECT NAME Westlake Village Restroom DESIGNED BY RH DATE

SUBJECT Floor 18650 CHECKED BY DATE

Masonry Bearing Wall

P: DL = 15 psf × 13.5 ft. = 203 plf
RLL = 20 psf × 13.5 ft. = 270 plf

L: ~pg. 30/1
EL = 23.3 psf

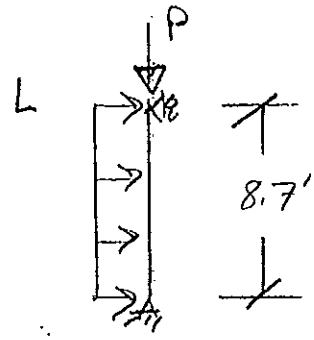

USE [6" CMU w/ #4 @ 32" o.c. vert. bars]

Continuous Wall Footing

DL = 15 psf × 13.5 ft. = 203 plf
RLL = 20 psf × 13.5 ft. = 270 plf

Wall DL = 81 psf × 8.7 ft. = 705 plf

USE [18" w × 8" D Footing w/ 3 - #4 Bars]

2001

PROJECT :	Westlake Village Park Restroom 18650	PAGE :	
CLIENT :	Romtec	DESIGN BY :	RMH
JOB NO. :	Romtec 216-23	DATE :	REVIEW BY :

Allowable Stress Design of Masonry Bearing Wall Based on TMS 402-11 / 2012 IBC

INPUT DATA & DESIGN SUMMARY

SPECIAL INSPECTION (0=NO, 1=YES)			1	Yes
TYPE OF MASONRY (1=CMU, 2=BRICK)			1	CMU
MASONRY STRENGTH	f_m'	=	1.5	ksi
REBAR YIELD STRESS	f_y	=	60	ksi
ALLOWABLE INCREASING ? (IBC/CBC 1605.3.2)			Yes	
SERVICE GRAVITY LOAD	P	=	473	lbs / ft
SERVICE LATERAL LOAD	w_1	=	23.3	plf / ft
SERVICE PARAPET LOAD	w_2	=	0	plf / ft
THICKNESS OF WALL	t	=	6	in
PARAPET HEIGHT	h_p	=	0	ft
WALL HEIGHT	h	=	8.7	ft
ECCENTRICITY	e	=	0	in
MASONRY SPECIFIC WEIGHT	γ_m	=	125	pcf
WALL HORIZ. REINF.	1	#	4	@ 32 in o.c. (at middle)
WALL VERT. REINF.	1	#	4	@ 32 in o.c. (at middle)

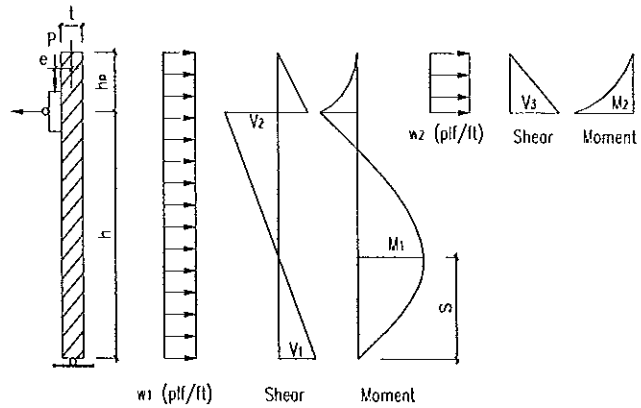

[THE WALL DESIGN IS ADEQUATE.]

ANALYSIS

VERT. REINF. AREA AT EACH SIDE	A_s	=	0.08	in^2
EFFECTIVE DEPTH (TMS 1.15.3.5)	d	=	2.82	in
WIDTH OF SECTION	b_w	=	12.00	in
EFFECTIVE THICKNESS	t_e	=	5.63	in
MASONRY ELASTICITY MODULUS	E_m	=	1350	ksi
STEEL ELASTICITY MODULUS	E_s	=	29000	ksi

MODULAR RATIO	n	=	21.48
REINFORCEMENT RATIO	ρ	=	0.0022
ALLOWABLE STRESS FACTOR	SF	=	1.333

THE NEUTRAL AXIS DEPTH FACTOR IS

$$k = \sqrt{2\rho n + (\rho n)^2} - \rho n \quad = \quad 0.26482$$

THE ALLOWABLE STRESS DUE TO FLEXURE IS

$$F_b = (SF)(0.33 f_m') = \quad 660 \quad \text{psi}$$

THE ALLOWABLE REINF. STRESS DUE TO FLEXURE IS

$$F_S = (1.33 \;\; or \;\; 1.0)(20) \;\; or \;\; 32 = \quad 32000 \text{ psi}$$

THE DISTANCE FROM BOTTOM TO M_1 IS

$$S = h + h_p - \left[\frac{(h+h_p)^2}{2h} - \frac{Pe}{h w_1}\right] \quad = 4.4 \quad \text{ft}$$

THE GOVERNING MOMENTS AND AXIAL FORCES ARE

$$M_1 = \frac{1.05}{2 w_1 h^2}\left[Pe + \frac{w_1}{2}(h^2 - h_p^2)\right]^2 \quad = \quad 231 \quad \text{ft-lbs/ft}$$

$$P_1 = P + (wall \;\; weight) \quad = \quad 745 \quad \text{lbs / ft}$$

$$M_2 = \frac{w_2 h_p^2}{2} \quad = \quad 0 \quad \text{ft-lbs/ft}$$

$$P_2 = P + (wall \;\; weight) \quad = \quad 473 \quad \text{lbs / ft}$$

THE GOVERNING SHEAR FORCES ARE

$$V_1 = (h + h_p) w_1 - \frac{(h+h_p)^2 w_1}{2h} + \frac{Pe}{h} \quad = \quad 101 \quad \text{lbs / ft}$$

$$V_2 = h w_1 - V_1 \quad = \quad 101 \quad \text{lbs / ft}$$

$$V_3 = h_p w_2 \quad = \quad 0 \quad \text{lbs / ft}$$

THE GOVERNING SHEAR STRESS IN MASONRY IS

$$f_v = \frac{MAX(V_1 \;,\; V_2 \;,\; V_3)}{t_e b_w} \quad = \quad 1.50 \quad \text{psi}$$

DETERMINE THE REGION FOR FLEXURE AND AXIAL LOAD (MDG-3 Tab 12.2.1, Fig 12.2-12 & 13, page 12-25).

$$\frac{M}{Pd} \le \frac{t_e}{6d} \qquad \frac{M}{Pd} \le \left(\frac{t_e}{2d} - \frac{1}{3}\right) \qquad \frac{M}{Pd} > \left(\frac{t_e}{2d} - \frac{1}{3}\right)$$

1. Wall is in compression and not cracked.
2. Wall is cracked but steel is in compression.
3. Wall is cracked and steel is in tension.

REGION 3 APPLICABLE FOR (M1, P1)

REGION 1 APPLICABLE FOR (M2, P2)

(cont'd)

CHECK REGION 1 CAPACITY

$$M_m = \frac{b_w t_e^2}{6} F_b - P\frac{t_e}{6} = \begin{cases} 3428 \text{ ft-lbs / ft} & > \quad M_1 \quad \text{[Not applicable]} \\ 3450 \text{ ft-lbs / ft} & > \quad M_2 \quad \text{[Satisfactory]} \end{cases}$$

CHECK REGION 2 CAPACITY

$$M_m = P\frac{t_e}{2} - \frac{2P^2}{3b_w F_b} = \begin{cases} 171 \text{ ft-lbs / ft} & < \quad M1 \quad \text{[Not applicable]} \\ 109 \text{ ft-lbs / ft} & > \quad M2 \quad \text{[Not applicable]} \end{cases}$$

CHECK REGION 3 CAPACITY (The moment maybe limited by either the masonry compression or steel tension, MDG-3 page 12-25).

$$M_m = MIN\left[\frac{1}{2} b_w kd F_b\left(d - \frac{kd}{3}\right) - P\left(d - \frac{t_e}{2}\right) \;,\; A_s F_s\left(d - \frac{kd}{3}\right) + P\left(\frac{t_e}{2} - \frac{kd}{3}\right)\right]$$

$$= \begin{cases} 631 \text{ ft-lbs / ft} & > \quad M_1 \quad \text{[Satisfactory]} \\ 614 \text{ ft-lbs / ft} & > \quad M_2 \quad \text{[Not applicable]} \end{cases}$$

THE ALLOWABLE SHEAR STRESS IS GIVEN BY (TMS 402 2.3.6)

$$F_v = (SF)1.125\left(\sqrt{f'_m}\right) \quad = \quad 58.095 \text{ psi} \quad > \quad f_v \quad \text{[Satisfactory]}$$

Technical References:

1. "Masonry Designers' Guide, Third Edition" (MDG-3), The Masonry Society, 2001.

2003

Company : Precision Structural Engineering, Inc.
Designer : RMH
Job Number : Romtec 216-23

Continuous Wall Footing

March 23, 2016

Checked By:_____

Sketch

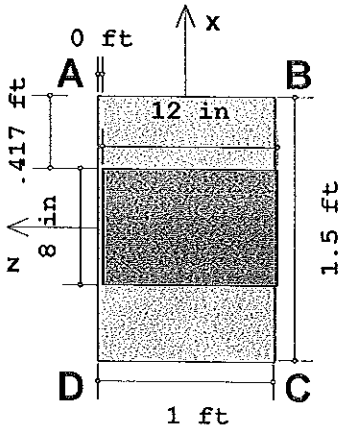

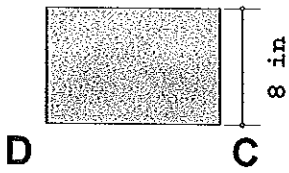

Details

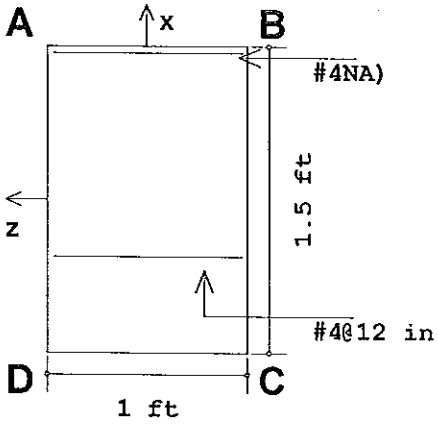

Bottom Rebar Plan

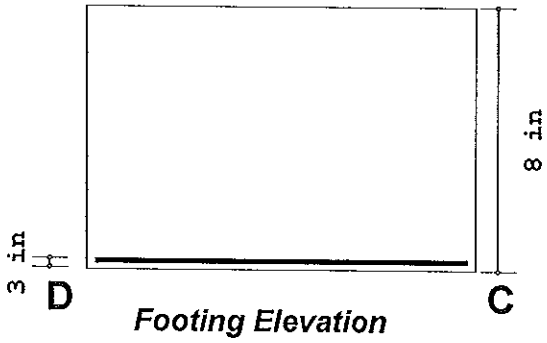

Footing Elevation

Geometry, Materials and Criteria

Length	: 1 ft	eX	: 0 in	Gross Allow. Bearing	: 1500 psf (gross)	Steel fy	: 60 ksi
Width	: 1.5 ft	eZ	: 0 in	Concrete Weight	: 150 pcf	Minimum Steel	: .0018
Thickness	: 8 in	pX	: 8 in	Concrete f'c	: 2.5 ksi	Maximum Steel	: .0075
Height	: 0 in	pZ	: 12 in	Design Code	: ACI 318-11		

Footing Top Bar Cover	: 3 in	Overturning / Sliding SF	: 1.5	Phi for Flexure	: 0.9
Footing Bottom Bar Cover	: 3 in	Coefficient of Friction	: 0.3	Phi for Shear	: 0.75
Pedestal Longitudinal Bar Cover	: 1.5 in	Passive Resistance of Soil	: 0 k	Phi for Bearing	: 0.65

Loads

	P (k)	Vx (k)	Vz (k)	Mx (k-ft)	Mz (k-ft)	Overburden (psf)
DL	.908					100
RLL	.27					

Soil Bearing

Description	Categories and Factors	Gross Allow.(psf)	Max Bearing (psf)	Max/Allowable Ratio
ASCE ASD 1	1DL	1500	805.333 (A)	.537
ASCE ASD 2	1DL+1LL	1500	805.333 (A)	.537
ASCE ASD 3 (b)	1DL+1RLL	1500	985.333 (A)	.657
ASCE ASD 4 (b)	1DL+.75LL+.75RLL	1500	940.333 (A)	.627

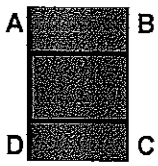

1DL
QA: 805.333 psf
QB: 805.333 psf
QC: 805.333 psf
QD: 805.333 psf
NAZ: -1 in
NAX: -1 in

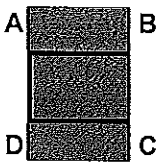

1DL+1LL
QA: 805.333 psf
QB: 805.333 psf
QC: 805.333 psf
QD: 805.333 psf
NAZ: -1 in
NAX: -1 in

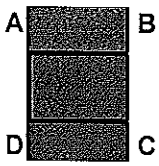

1DL+1RLL
QA: 985.333 psf
QB: 985.333 psf
QC: 985.333 psf
QD: 985.333 psf
NAZ: -1 in
NAX: -1 in

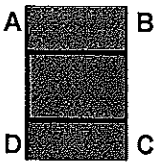

1DL+.75LL+.75RLL
QA: 940.333 psf
QB: 940.333 psf
QC: 940.333 psf
QD: 940.333 psf
NAZ: -1 in
NAX: -1 in

Footing Flexure Design (Bottom Bars)

As-min x-dir (Top Flexure): **.18 in^2**
As-min z-dir (Top Flexure): **.27 in^2**
As-min x-dir (Bot Flexure): **.18 in^2**
As-min z-dir (Bot Flexure): **.27 in^2**

As-min x-dir (T & S): **.173 in^2**
As-min z-dir (T & S): **.259 in^2**

Description	Categories and Factors	Mu-xx UC Max	Mu-xx (k-ft)	z-Dir As Required (in^2)	z-Dir As Provided (in^2)	Mu-zz UC Max	Mu-zz (k-ft)	x-Dir As Required (in^2)	x-Dir As Provided (in^2)
ACI 9-1	1.4DL	0	0	0	.785	.0195	.07	.004	.196
ACI 9-2 (a)	1.2DL+1.6LL	0	0	0	.785	.01672	.06	.003	.196
ACI 9-2 (b)	1.2DL+1.6LL+.5RL..	0	0	0	.785	.01879	.07	.004	.196
ACI 9-3 (b)	1.2DL+1.6RLL+1LL	0	0	0	.785	.02334	.09	.004	.196

Footing Shear Check

Two Way (Punching) Vc: **NA** One Way (x Dir. Cut) Vc **8.1 k** One Way (z Dir. Cut) Vc: **5.4 k**

Description	Categories and Factors	Punching Vu(k)	Punching Vu/øVc	x Dir. Cut Vu(k)	x Dir. Cut Vu/øVc	z Dir. Cut Vu(k)	z Dir. Cut Vu/øVc
ACI 9-1	1.4DL	NA	NA	.0006356	0	.035	.009
ACI 9-2 (a)	1.2DL+1.6LL	NA	NA	.0005448	0	.03	.007
ACI 9-2 (b)	1.2DL+1.6LL+.5RLL	NA	NA	.0006123	0	.034	.008
ACI 9-3 (b)	1.2DL+1.6RLL+1LL	NA	NA	.0007608	0	.042	.01

Concrete Bearing Check (Vertical Loads Only)

Bearing Bc : 204 k

Description	Categories and Factors	Bearing Bu (k)	Bearing Bu/øBc
ACI 9-1	1.4DL	1.271	.01
ACI 9-2 (a)	1.2DL+1.6LL	1.09	.008
ACI 9-2 (b)	1.2DL+1.6LL+.5RLL	1.225	.009
ACI 9-3 (b)	1.2DL+1.6RLL+1LL	1.522	.011

Overturning Check (Service)

Description	Categories and Factors	Mo-xx (k-ft)	Ms-xx (k-ft)	Mo-zz (k-ft)	Ms-zz (k-ft)	OSF-xx	OSF-zz
ASCE ASD 1	1DL	0	.604	0	.906	NA	NA
ASCE ASD 2	1DL+1LL	0	.604	0	.906	NA	NA
ASCE ASD 3 (b)	1DL+1RLL	0	.739	0	1.108	NA	NA
ASCE ASD 4 (b)	1DL+.75LL+.75RL..	0	.705	0	1.058	NA	NA

Mo-xx: Governing Overturning Moment about AD or BC
Ms-xx: Governing Stablizing Moment about AD or BC
OSF-xx: Ratio of Ms-xx to Mo-xx

Sliding Check (Service)

Description	Categories and Factors	Va-xx (k)	Vr-xx (k)	Va-zz (k)	Vr-zz (k)	SR-xx	SR-zz
ASCE ASD 1	1DL	0	.342	0	.342	NA	NA
ASCE ASD 2	1DL+1LL	0	.342	0	.342	NA	NA
ASCE ASD 3 (b)	1DL+1RLL	0	.423	0	.423	NA	NA
ASCE ASD 4 (b)	1DL+.75LL+.75RL..	0	.403	0	.403	NA	NA

Va-xx: Applied Lateral Force to Cause Sliding Along xx Axis
Vr-xx: Resisting Lateral Force Against Sliding Along xx Axis
SR-xx: Ratio of Vr-xx to Va-xx

LATERAL ANALYSIS & DESIGN:

Pages 3,000 - 3,999

250-A Main Street
Klamath Falls, OR. 97601

E-Mail: info@structure1.com
Web: www.structure1.com

ph. (541) 850-6300
fax (541) 850-6233

Precision Structural Engineering, Inc.
250 Main Street, Suite A • Klamath Falls, OR 97601
Tel (541) 850-8300 • FAX (541) 850-8233

Medford Office
836 Mason Way (off Sage Road) • Medford, OR 97501
Tel (541) 858-8500

www.structure1.com • Email: info@structure1.com

PROJECT NO. Romtec 216-23 SHEET 3000 OF

PROJECT NAME Westlake Village Restroom DESIGNED BY RH DATE

SUBJECT Lateral 18650 CHECKED BY DATE

5.3' Masonry Shearwall

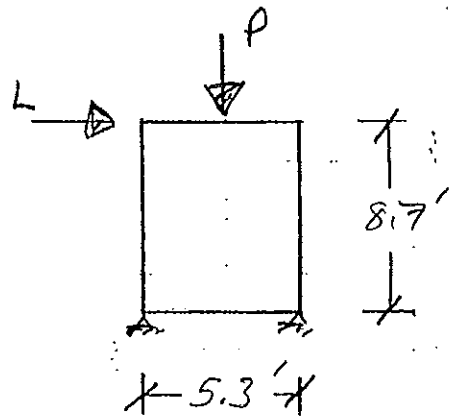

P: DL = 15 psf × 13.5 ft. = 203 plf
RLL = 20 psf × 13.5 ft. = 270 plf

L: [5 psf Min.]

WL = [(9.3 psf × sin 26.6°) × 7 ft. × 16 ft.] +
pg. 107 14.8 psf × 4.5 ft. × 14.5 ft.

WL = 1,526 lb.

EL = 18,400 lb. / 2 = 9,200 lb.
pg. 104

USE [6" CMU w/ #4 @ 16" o.c. horz. & vert.]

6.7' Masonry Shearwall

* Loads same as above
- Length = 6.7'

USE [6" CMU w/ #4 @ 24" o.c. vert. & #5 @ 24" o.c. horz.]

PROJECT : Westlake Village Park Restroom 18650
CLIENT : Romtec
JOB NO. : Romtec 216-23 DATE :

PAGE :
DESIGN BY : RMH
REVIEW BY :

Masonry Shear Wall Design Based on TMS 402-11 / 2012 IBC (both ASD and SD)

INPUT DATA & DESIGN SUMMARY

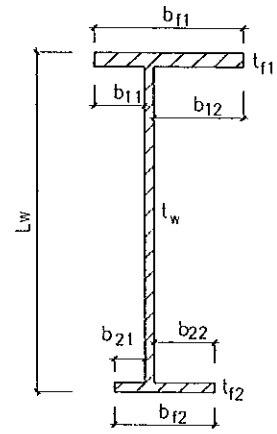

SPECIAL INSPECTION (0=NO, 1=YES)		1	Yes
(This option only for local jurisdiction amendments to the code, not part of TMS.)			
TYPE OF MASONRY (1=CMU, 2=BRICK)		1	CMU
MASONRY STRENGTH	f_m' =	1.5	ksi
REBAR YIELD STRESS	f_y =	60	ksi
ALLOWABLE 30% INCREASING ? (IBC 1605.3.2)			Yes
SEISMIC PERFORMANCE CATEGORY (C,D,E, 0=WIND, 5=GRAVITY)		D	Seismic D
SERVICE AXIAL LOAD	P =	2.5	kips, at middle of L_w
SERVICE SHEAR LOAD	V_x =	9.2	kips, (in-plane force)
SERVICE MOMENT LOAD	M_x =	80	ft-kips, (top flange, bf1, compression)
	M_y =	0.23	ft-kips, (out-of-plane, left b11 & b21, compression)
EFFECTIVE HEIGHT OF WALL	h_w =	8.7	ft
LENGTH OF SHEAR WALL	L_w =	5.3	ft, (within vertical control joints)

THE WALL DESIGN IS ADEQUATE.

THICKNESS OF WALL t_w = 6 in

REINFORCING OF WALL 2 # 4 at each ends, with 4 in center to edge.

A_{sh}, Horizontal 1 # 4 @ 16 in o.c.

A_{sv}, Vertical 1 # 4 @ 16 in o.c.

TOP FLANGE (COMPRESSION) b_{11} = 0 in , b_{12} = 0 in , b_{f1} = 6 in ,(TMS 1.9.4.2.3)

t_{f1} = 8 in , 1 # 4 @ 32 in o.c., Vertical

BOTTOM FLANGE b_{21} = 0 in , b_{22} = 0 in , b_{f2} = 6 in, (TMS 1.9.4.2.3)

t_{f2} = 8 in , 1 # 4 @ 32 in o.c., Vertical

ANALYSIS

CHECK FLEXURAL & AXIAL CAPACITY BY ALLOWABLE STRESS DESIGN (ASD)

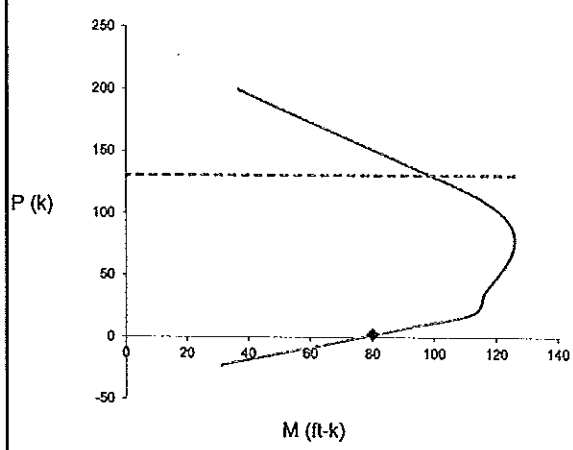

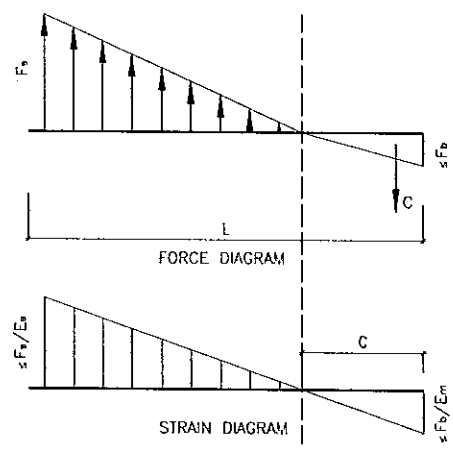

P (load) = 2.5 kips < P (allowable) = P_a = 130.534 kips

M (resultant) = $(M_x^2 + M_y^2)^{0.5}$ = 80.0003 ft-kips < M (allowable) = 81.5025 ft-kips [Satisfactory]

Where	E_m =	1350 ksi, (TMS 1.8.2.2.1)	A_n =	364	in^2
	E_s =	29000 ksi, (TMS 1.8.2.1)	A_{st} =	1.40	in^2
	Scale Factor =	1.333 , (TMS 2.1.2.3)	$f_s \ge$	0	ksi, (TMS 2.3.3.3)
	F_b =	0.660 ksi, (TMS 2-18)	h / r =	64	, neglected conservatively flanges.
	F_s =	32.00 ksi, (TMS 2.3.3.1)	P_a =	130.534	kips, (TMS 2.3.4.2.1)

(cont'd)

CHECK FLEXURAL & AXIAL CAPACITY BY STRENGTH DESIGN (SD)

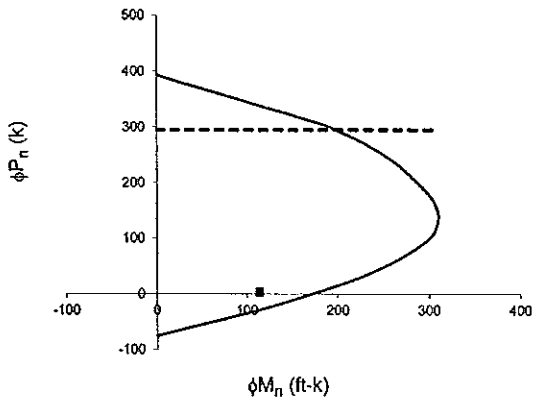

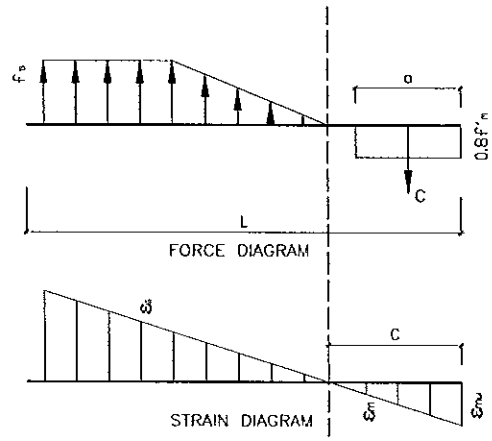

$P_u = 1.2\ P =$	3	kips	<	$\phi P_n =$	294.601	kips, (TMS 402 3.3.4.1.1)	
$M_u = (1/0.7)\ (M_x^2 + M_y^2)^{0.5} =$	114.286	ft-kips	<	$\phi M_n =$	176.757	ft-kips, at P_u level.	
			[Satisfactory]				
Where $\varepsilon_{mu} =$	0.0025	, (TMS 3.3.2.c)		d =	63	in	
$\phi =$	0.9	, (TMS 3.1.4.1)		$f_m' =$	1.5	ksi	

CHECK SHEAR CAPACITY (ASD), (TMS 2.3.6)

$$F_v = MAX\left\{(SF)\left[\frac{1}{4}\left(4-1.75MIN\left(1\ ,\ \frac{M_T}{Vd}\right)\right)\sqrt{f'_m}+0.25\frac{P}{A_n}\right]+0.5\frac{A_vF_sd}{A_ns}\ ,\ (SF)\left[\frac{1}{2}\left(4-1.75MIN\left(1\ ,\ \frac{M_T}{Vd}\right)\right)\sqrt{f'_m}+0.25\frac{P}{A_n}\right]\right\}$$

= 66 psi > 1.5 f_v = 39 psi [Satisfactory]

(factor 1.5 from TMS 402 1.18.3.2.6.1.2)

$$F_{v,\,Maximum} = (SF)\,MIN\left[3\ ,\ MAX\left(2\ ,\ 2+\frac{4}{3}\left(1-\frac{M_T}{Vd}\right)\right)\right]\sqrt{f'_m} =$$ 103 psi > 1.5 f_v

[Satisfactory]

CHECK MINIMUM REINFORCEMENTS

$A_{sh,min} =$	0.101	in^2/ft	<	$A_{sh,actual} =$	0.150	in^2/ft	[Satisfactory]	(TMS 1.18.3.2.6)
$S_{sh,max} =$	21	in	>	$S_{sh,actual} =$	16	in	[Satisfactory]	(TMS 1.18.3.2.6)
$A_{sv,min} =$	0.047	in^2/ft	<	$A_{sv,actual} =$	0.150	in^2/ft	[Satisfactory]	(TMS 1.18.3.2.6)
$S_{sv,max} =$	21	in	>	$S_{sv,actual} =$	16	in	[Satisfactory]	(TMS 1.18.3.2.6)

CHECK MAXIMUM REINFORCEMENT PERCENTAGE

$$\rho_{max} = \frac{nf'_m}{2f_y\left(n+\frac{f_y}{f'_m}\right)} =$$ 0.0044 > $\rho =$ 0.0011 [Satisfactory]

(TMS 402 2.3.4.4)

PROJECT : Westlake Village Park Restroom 18650
CLIENT : Romtec
JOB NO. : Romtec 216-23 DATE :

PAGE :
DESIGN BY : RMH
REVIEW BY :

Masonry Shear Wall Design Based on TMS 402-11 / 2012 IBC (both ASD and SD)

INPUT DATA & DESIGN SUMMARY

SPECIAL INSPECTION (0=NO, 1=YES) 1 Yes
(This option only for local jurisdiction amendments to the code, not part of TMS.)
TYPE OF MASONRY (1=CMU, 2=BRICK) 1 CMU
MASONRY STRENGTH f_m' = 1.5 ksi
REBAR YIELD STRESS f_y = 60 ksi
ALLOWABLE 30% INCREASING ? (IBC 1605.3.2) Yes
SEISMIC PERFORMANCE CATEGORY D Seismic D
(C,D,E, 0=WIND, 5=GRAVITY)

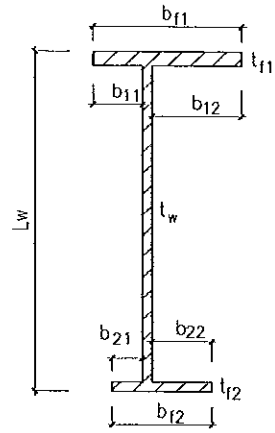

SERVICE AXIAL LOAD P = 3.17 kips, at middle of L_w
SERVICE SHEAR LOAD V_x = 9.2 kips, (in-plane force)
SERVICE MOMENT LOAD M_x = 80 ft-kips, (top flange, bf1, compression)
M_y = 0.23 ft-kips, (out-of-plane, left b11 & b21, compression)

EFFECTIVE HEIGHT OF WALL h_w = 8.7 ft
LENGTH OF SHEAR WALL L_w = 6.7 ft, (within vertical control joints)

THE WALL DESIGN IS ADEQUATE.

THICKNESS OF WALL t_w = 6 in
REINFORCING OF WALL 2 # 4 at each ends, with 4 in center to edge.
A_{sh}, Horizontal 1 # 5 @ 24 in o.c.
A_{sv}, Vertical 1 # 4 @ 24 in o.c.

TOP FLANGE (COMPRESSION) b_{11} = 0 in , b_{12} = 0 in , b_{f1} = 6 in ,(TMS 1.9.4.2.3)
t_{f1} = 8 in , 1 # 4 @ 32 in o.c., Vertical

BOTTOM FLANGE b_{21} = 0 in , b_{22} = 0 in , b_{f2} = 6 in, (TMS 1.9.4.2.3)
t_{f2} = 8 in , 1 # 4 @ 32 in o.c., Vertical

ANALYSIS
CHECK FLEXURAL & AXIAL CAPACITY BY ALLOWABLE STRESS DESIGN (ASD)

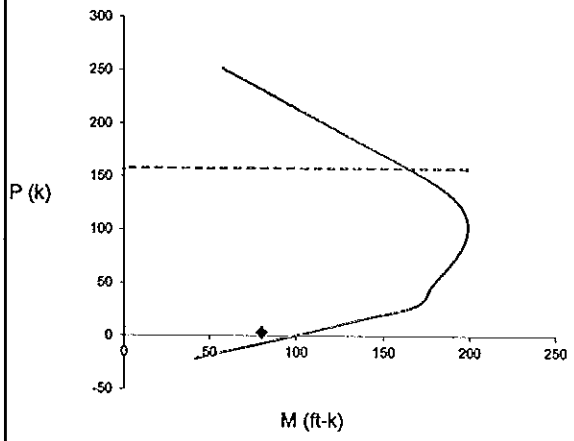

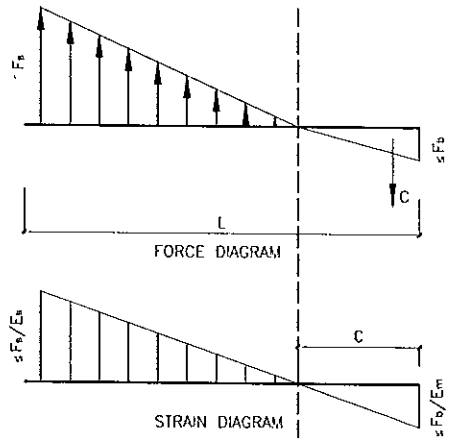

P (load) = 3.17 kips < P (allowable) = P_a = 157.541 kips
M (resultant) = $(M_x^2 + M_y^2)^{0.5}$ = 80.0003 ft-kips < M (allowable) = 106.926 ft-kips [Satisfactory]

Where E_m = 1350 ksi, (TMS 1.8.2.2.1) A_n = 458 in^2
E_s = 29000 ksi, (TMS 1.8.2.1) A_{st} = 1.34 in^2
Scale Factor = 1.333 , (TMS 2.1.2.3) $f_s \geq$ 0 ksi, (TMS 2.3.3.3)
F_b = 0.660 ksi, (TMS 2-18) h / r = 64 , neglected conservatively flanges.
F_s = 32.00 ksi, (TMS 2.3.3.1) P_a = 157.541 kips, (TMS 2.3.4.2.1)

(cont'd)

CHECK FLEXURAL & AXIAL CAPACITY BY STRENGTH DESIGN (SD)

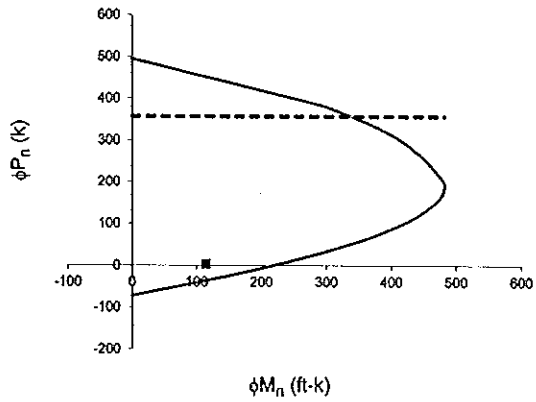

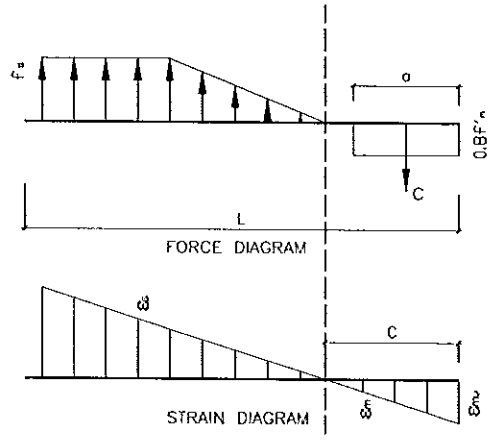

$P_u = 1.2\ P =$	3.804	kips	<	$\phi P_n =$	357.08	kips, (TMS 402 3.3.4.1.1)	
$M_u = (1/0.7)\ (M_x^2 + M_y^2)^{0.5} =$	114.286	ft-kips	<	$\phi M_n =$	227.147	ft-kips, at P_u level.	
			[Satisfactory]				
Where $\varepsilon_{mu} =$	0.0025	, (TMS 3.3.2.c)	d =	79	in		
$\phi =$	0.9	, (TMS 3.1.4.1)	$f_m' =$	1.5	ksi		

CHECK SHEAR CAPACITY (ASD), (TMS 2.3.6)

$$F_v = MAX\left\{(SF)\left[\frac{1}{4}\left(4-1.75MIN\left(1\ ,\ \frac{M_T}{Vd}\right)\right)\sqrt{f'_m}+0.25\frac{P}{A_n}\right]+0.5\frac{A_v F_s d}{A_n s}\ ,\ (SF)\left[\frac{1}{2}\left(4-1.75MIN\left(1\ ,\ \frac{M_T}{Vd}\right)\right)\sqrt{f'_m}+0.25\frac{P}{A_n}\right]\right\}$$

= 67 psi > 1.5 f_v = 31 psi [Satisfactory]

(factor 1.5 from TMS 402 1.18.3.2.6.1.2)

$$F_{v,\,Maximum} = (SF)\,MIN\left[3\ ,\ MAX\left(2\ ,\ 2+\frac{4}{3}\left(1-\frac{M_T}{Vd}\right)\right)\right]\sqrt{f'_m} =$$ 103 psi > 1.5 f_v

[Satisfactory]

CHECK MINIMUM REINFORCEMENTS

$A_{sh,min} =$	0.101	in^2/ft	<	$A_{sh,actual} =$	0.155	in^2/ft	[Satisfactory]	(TMS 1.18.3.2.6)
$S_{sh,max} =$	24	in	>	$S_{sh,actual} =$	24	in	[Satisfactory]	(TMS 1.18.3.2.6)
$A_{sv,min} =$	0.047	in^2/ft	<	$A_{sv,actual} =$	0.100	in^2/ft	[Satisfactory]	(TMS 1.18.3.2.6)
$S_{sv,max} =$	24	in	>	$S_{sv,actual} =$	24	in	[Satisfactory]	(TMS 1.18.3.2.6)

CHECK MAXIMUM REINFORCEMENT PERCENTAGE

$$\rho_{max} = \frac{n f'_m}{2 f_y\left(n+\frac{f_y}{f'_m}\right)} =$$ 0.0044 > $\rho =$ 0.0009 [Satisfactory]

(TMS 402 2.3.4.4)

Precision Structural Engineering, Inc.
250-A Main Street • Klamath Falls, OR 97601
Tel. (541) 850-6300 • FAX (541) 850-6233

Medford Office
836 Mason Way (off Sage Road) • Medford, OR 97501
Tel. (541) 858-8500

www.structure1.com • Email: psei@structure1.com

PROJECT NO. Romtec 216-23 SHEET 3010 OF

PROJECT NAME Westlake Village Restroom DESIGNED BY Ralph DATE

SUBJECT Lateral 18650 CHECKED BY DATE

Wall to Roof Anchorage

F = 280 plf ~pg. 3011

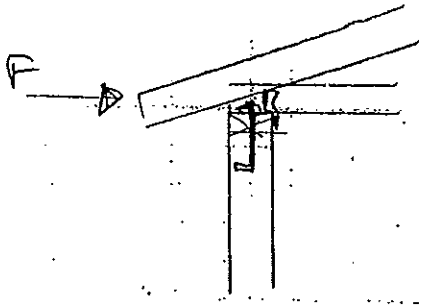

Truss to Plate

F = 280 plf · 2 ft. = 560 lb.

USE [Simpson A35 @ Each Truss] cap. = 695 lb. > 560 lb.

Plate to Wall

USE [½"Ø Anchor Bolt @ 24" o.c.] cap. = 380 ÷ 1.6 = 608 lb.

> 560 lb.

3011

Lateral Force for One-Story Wall Based on 2012 IBC

INPUT DATA

WALL THICKNESS	t	=	8	in
PARAPET HEIGHT	h_p	=	0	ft
WALL HEIGHT	h	=	8.7	ft
TOTAL WALL DENSITY	ρ	=	125	pcf
SEISMIC PARAMETER	S_{DS}	=	1	(ASCE 7 Sec 11.4.4)
SEISMIC DESIGN CATEGOR'	SDC	=	D	
DIAPHRAGM FLEXIBLE ? (0=no, 1=yes)			1	Yes
SEISMIC IMPORTANCE FACTOR	I_e	=	1	(ASCE 7 Tab 11.5-1)
WIND IMPORTANCE FACTOR	I_w	=	1.0	(ASCE 7 Tab 1.6-2)
BASIC WIND SPEED	V	=	110	mph, (ASCE 7 Sec 26.5.1)
EXPOSURE CATEGORY (B, C, D)		=	C	
TOPOGRAPHIC FACTOR	K_{zt}	=	1	Flat, (ASCE 7 Tab 26.8-1)

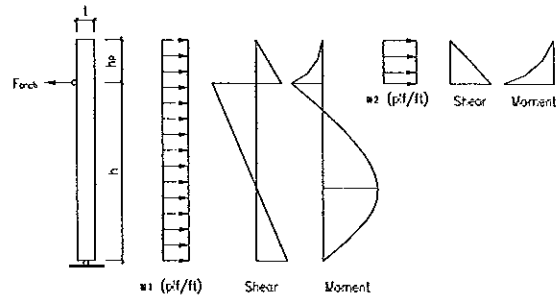

DESIGN SUMMARY

Out-of-plane force for wall design w_1 = 23.3 psf (Seismic governs)
Out-of-plane force for parapet design w_2 = 70.0 psf (Seismic governs)
Out-of-plane force for anchorage design F_{anch} = 280 plf (Horizontal direction)
(The governing seismic & wind forces have been reduced by 0.7 & 0.6 for ASD)

WIND ANALYSIS

Out-of-plane wind force for wall design (ASCE 7, Eq. 30.4-1)

$$w_{1,wind} = 0.6q_h\left[(GC_P)-(GC_{Pi})\right] = \left(0.00256K_hK_{zt}K_dV^2\right)\left[(GC_P)-(GC_{Pi})\right] = 20.9 \text{ psf}$$

Where: K_h = 0.85 (mean roof h = 8.7 ft, changeable) (ASCE 7 Tab. 28.3-1); K_d = 0.85 (Tab. 26.6-1); GC_p = -1.38 (corner ? Yes, TA = 11.6 ft²) (ASCE 7 30.4.2); GC_{pi} = 0.18 (ASCE 7 Fig. 26.11-1)

Out-of-plane wind force for parapet design (ASCE 7, Eq. 30.9-1)

$$w_{2,wind} = 0.6q_p\left[(GC_P)-(GC_{Pi})\right] = \left(0.00256K_hK_{zt}K_dV^2\right)\left[(GC_P)-(GC_{Pi})\right] = 53.4 \text{ psf, (ASCE 7,6.5.12.4.4)}$$

Where: K_h = 0.85 (ASCE 7 Tab. 28.3-1); K_d = 0.85 (ASCE 7 Tab. 26.6-1); GC_p = -1.40 (TA = 0 ft²) wall, (ASCE 7 30.4.2); = 1.00 roof, (ASCE 7 30.4.2); GC_{pi} = 0.18 (ASCE 7 Fig. 26.11-1)

Out-of-plane wind force for anchorage design

$$F_{anch,wind} = \frac{h}{2}w_{1,wind} + h_p\left(1+\frac{h_p}{2h}\right)w_{2,wind} = 91 \text{ plf (Horizontal)}$$

SEISMIC ANALYSIS

Out-of-plane seismic force for wall design (ASCE 7, Sec.12.11.1)

$$w_{1,seismic} = MAX\left(0.4IS_{DS}W_P\ ,0.1W_P\right) = 0.40\ W_p = 33.3 \text{ psf}$$

Where: W_p = 83.3 psf, I_e = 1.0 (IBC Tab 1604.5 & ASCE 7 Tab 1.5-2)

Out-of-plane seismic force for parapet design (ASCE 7, Sec. 13.3.1)

$$w_{2,seismic} = MAX\left[0.3S_{DS}I_pW_p\ ,\ MIN\left(\frac{1.2a_pS_{DS}I_pW_p}{R_p}\ ,\ 1.6S_{DS}I_pW_p\right)\right] = 1.20\ W_p = 100.0 \text{ psf}$$

Where: a_p = 2.5 (ASCE 7 Tab. 13.5-1); I_p = 1.0 (ASCE 7 Sec. 13.1.3); R_p = 2.5 (ASCE 7 Tab. 13.5-1)

Out-of-plane seismic force for anchorage design

For masonry or concrete under seismic design category A & B, both flexible & rigid diaphragm (ASCE 7 Sec. 12.11.2)

$$F_{anch,seismic} = MAX\left[0.4S_{DS}IW_p\frac{(h+h_p)^2}{2h}\ ,\ 0.1W_p\frac{(h+h_p)^2}{2h}\ ,\ 400S_{DS}I\ ,\ F_{min}\right] = 4.80\ W_p = 400 \text{ plf (Horizontal)}$$

(Not applicable)

Where: F_{min} = 280 plf (ASCE 7 Sec. 12.11.2 & 11.7.3)

For seismic design category C and above, flexible diaphragm (ASCE 7 Sec. 12.11.2.1)

$$F_{anch,seismic} = MAX\left[0.8S_{DS}IW_p\frac{(h+h_p)^2}{2h}\ ,\ 0.1W_p\frac{(h+h_p)^2}{2h}\ ,\ 400S_{DS}I\ ,\ F_{min}\right] = 4.80\ W_p = 400 \text{ plf (Horizontal)}$$

(Applicable)

For seismic design category C and above, rigid diaphragm (ASCE 7 Sec. 12.11.2 & Sec. 13.3.1)

$$F_{anch,seismic} = MAX\left\{MAX\left[0.3S_{DS}I_p\ ,\ MIN\left(\frac{1.2a_pS_{DS}I_p}{R_p}\ ,\ 1.6S_{DS}I_p\right)\right]W_p\frac{(h+h_p)^2}{2h}\ ,\ 400S_{DS}I\ ,\ F_{min}\right\}$$

= 4.80 W_p = 400 plf (Horizontal) (Not applicable)

Where: a_p = 1.0 (ASCE 7 Tab. 13.5-1); R_p = 1.5 (1.5, ASCE 7 13.4.2 or 2.5, ASCE 7 Tab 13.5-1)

3012

SIMPSON Strong-Tie®

LTP4/LTP5/A34/A35 *Framing Angles & Plates*

The larger LTP5 spans subfloor at the top of the blocking or rim joist. The embossments enhance performance.

The LTP4 Lateral Tie Plate transfers shear forces for top plate-to-rim joist or blocking connections. Nail holes are spaced to prevent wood splitting for single and double top plate applications. May be installed over plywood sheathing.

The A35 anchor's exclusive bending slot allows instant, accurate field bends for all two- and three-way ties. Balanced, completely reversible design permits the A35 to secure a great variety of connections.

MATERIAL: LTP4/LTP5–20 gauge; all others–18 gauge

FINISH: Galvanized. Some products available in stainless steel or ZMAX® coating; see Corrosion Information, page 14-15.

INSTALLATION: • Use all specified fasteners. See General Notes.
• A35–Bend one time only.

CODES: See page 13 for Code Reference Key Chart.

These products are available with additional corrosion protection. Additional products on this page may also be available with this option, check with Simpson Strong-Tie for details.

These products are approved for installation with the Strong-Drive SD Structural-Connector screw. See page 27 for more information.

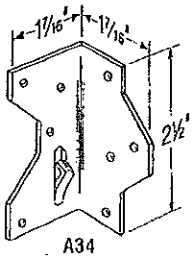

A34

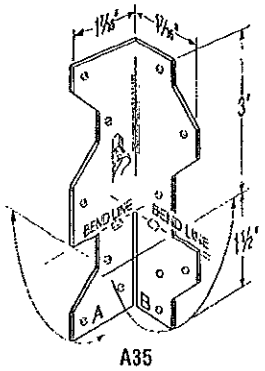

A35

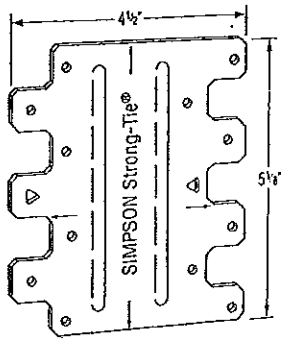

LTP5

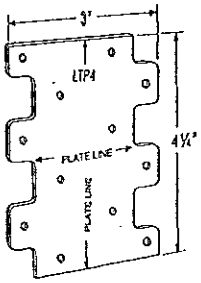

LTP4

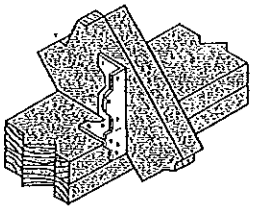
Joists to Plate with A Leg Inside

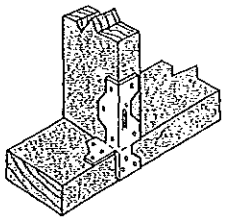
Studs to Plate with B Leg Outside

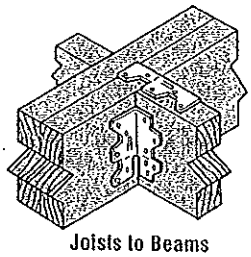
Joists to Beams

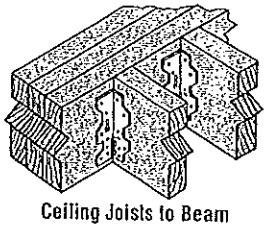
Ceiling Joists to Beam

Model No.	Type of Connection	Fasteners	Direction of Load	DF/SP Allowable Loads Floor (100)	DF/SP Roof (125)	DF/SP (160)	SPF/HF Allowable Loads Floor (100)	SPF/HF Roof (125)	SPF/HF (160)	Code Ref.
A34	1	8-8dx1½	F_1	395	485	515	340	415	445	IP1, L5, L18, F13
			F_2[5]	395	455	455	340	390	390	
A35	2	9-8dx1½	A_1, E	295	365	395	255	315	340	
			C_1	210	210	210	180	180	180	
	3	12-8dx1½	A_2	295	365	380	255	315	325	
			C_2	295	365	370	255	315	320	
			D	230	230	230	200	200	200	
	4	12-8dx1½	F_1	595	695	695	510	600	600	
			F_2[5]	595	670	670	510	575	575	
LTP4	5	12-8dx1½	G	515	645	670	445	555	575	I14, L5, F13
			H	515	645	670	445	555	575	
LTP5	6	12-8dx1½	G	585	620	620	505	535	535	IP1, L18, F25
			H	545	545	545	470	470	470	

1. Allowable loads are for one anchor. When anchors are installed on each side of the joist, the minimum joist thickness is 3".
2. Some illustrations show connections that could cause cross-grain tension or bending of the wood during loading if not reinforced sufficiently. In this case, mechanical reinforcement should be considered.
3. LTP4 can be installed over ⅜" wood structural panel sheathing with 8dx1½ nails and achieve 0.72 of the listed load, or over ½" and achieve 0.64 of the listed load. 8d commons will achieve 100% load.
4. The LTP5 may be installed over wood structural panel sheathing up to ½" thick using 8dx1½ nails with no reduction in load.
5. Connectors are required on both sides to achieve F_2 loads in both directions.
6. NAILS: 8dx1½ = 0.131" dia. x 1½" long.
See page 22-23 for other nail sizes and information.

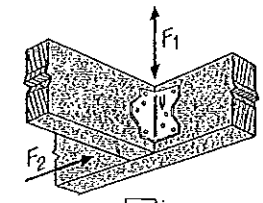

1 A34

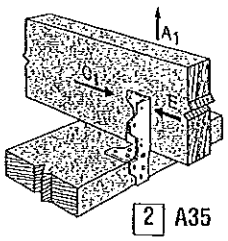

2 A35

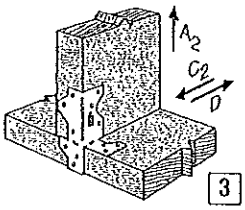

3 A35

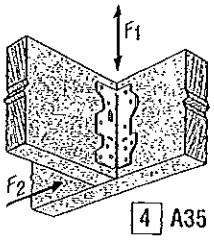

4 A35

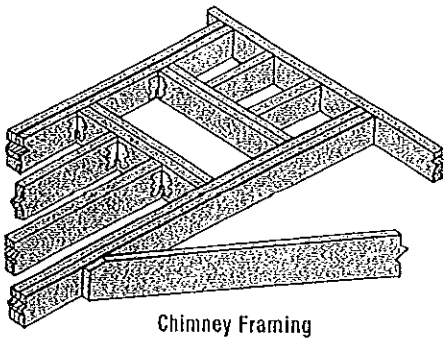
Chimney Framing

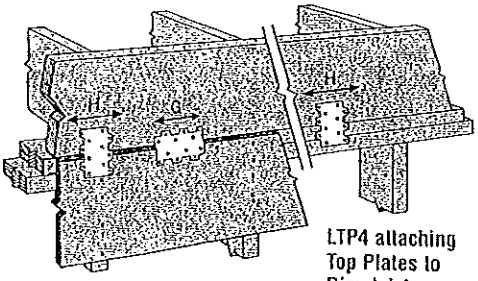
5 LTP4 Installed over Wood Structural Panel Sheathing

LTP4 attaching Top Plates to Rim Joist

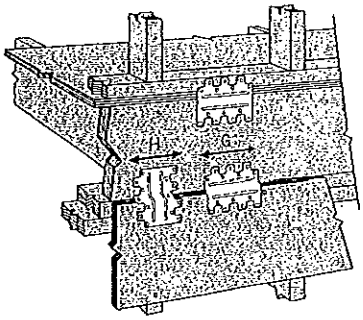
6 LTP5 Installed over Wood Structural Panel Sheathing

C-2013 © 2013 SIMPSON STRONG-TIE COMPANY INC. PRINTED 12/12

3013

Table 11E BOLTS: Reference Lateral Design Values, Z, for Single Shear (two member) Connections[1,2,3,4]

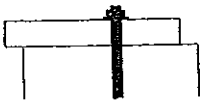

for sawn lumber or SCL to concrete

Thickness: Embedment Depth in Concrete t_m in.	Thickness: Side Member t_s in.	Bolt Diameter D in.	G=0.67 Red Oak $Z_{\parallel}$ lbs.	G=0.67 Red Oak $Z_{\perp}$ lbs.	G=0.55 Mixed Maple Southern Pine $Z_{\parallel}$ lbs.	G=0.55 Mixed Maple Southern Pine $Z_{\perp}$ lbs.	G=0.50 Douglas Fir-Larch $Z_{\parallel}$ lbs.	G=0.50 Douglas Fir-Larch $Z_{\perp}$ lbs.	G=0.49 Douglas Fir-Larch(N) $Z_{\parallel}$ lbs.	G=0.49 Douglas Fir-Larch(N) $Z_{\perp}$ lbs.	G=0.46 Douglas Fir(S) Hem-Fir(N) $Z_{\parallel}$ lbs.	G=0.46 Douglas Fir(S) Hem-Fir(N) $Z_{\perp}$ lbs.
6.0 and greater	1-1/2	1/2	770	480	680	410	650	380	640	380	620	360
		5/8	1070	660	970	580	930	530	920	520	890	470
		3/4	1450	890	1330	660	1270	590	1260	560	1230	520
		7/8	1890	960	1760	720	1690	630	1680	600	1640	550
		1	2410	1020	2250	770	2100	680	2060	650	1930	600
	1-3/4	1/2	830	510	740	430	700	400	690	390	670	370
		5/8	1160	680	1030	600	980	550	970	550	940	530
		3/4	1530	900	1390	770	1330	680	1310	660	1270	600
		7/8	1970	1120	1800	840	1730	740	1720	700	1680	640
		1	2480	1190	2290	890	2210	790	2200	750	2150	700
	2-1/2	1/2	830	590	790	520	770	470	760	460	750	440
		5/8	1290	800	1230	670	1180	610	1170	610	1120	570
		3/4	1840	1000	1630	850	1540	800	1520	780	1460	750
		7/8	2290	1240	2050	1080	1940	1020	1920	1000	1860	920
		1	2800	1520	2530	1280	2410	1130	2390	1080	2310	1000
	3-1/2	1/2	830	590	790	540	770	510	760	500	750	490
		5/8	1290	880	1230	810	1200	730	1190	720	1170	670
		3/4	1860	1190	1770	980	1720	900	1720	880	1680	830
		7/8	2540	1410	2410	1190	2320	1100	2290	1070	2200	1020
		1	3310	1670	2970	1420	2800	1330	2770	1300	2660	1260

Thickness: Embedment Depth in Concrete t_m in.	Thickness: Side Member t_s in.	Bolt Diameter D in.	G=0.43 Hem-Fir $Z_{\parallel}$ lbs.	G=0.43 Hem-Fir $Z_{\perp}$ lbs.	G=0.42 Spruce-Pine-Fir $Z_{\parallel}$ lbs.	G=0.42 Spruce-Pine-Fir $Z_{\perp}$ lbs.	G=0.37 Redwood (open grain) $Z_{\parallel}$ lbs.	G=0.37 Redwood (open grain) $Z_{\perp}$ lbs.	G=0.36 Eastern Softwoods Spruce-Pine-Fir(S) Western Cedars Western Woods $Z_{\parallel}$ lbs.	G=0.36 Eastern Softwoods Spruce-Pine-Fir(S) Western Cedars Western Woods $Z_{\perp}$ lbs.	G=0.35 Northern Species $Z_{\parallel}$ lbs.	G=0.35 Northern Species $Z_{\perp}$ lbs.
6.0 and greater	1-1/2	1/2	590	340	590	340	550	310	540	290	530	290
		5/8	860	420	850	410	810	350	800	330	780	320
		3/4	1200	460	1190	450	1130	370	1120	360	1100	350
		7/8	1580	500	1540	490	1360	410	1330	390	1280	370
		1	1800	540	1760	530	1560	440	1520	420	1460	410
	1-3/4	1/2	640	360	630	350	580	320	580	310	560	310
		5/8	910	490	900	480	840	400	830	380	810	370
		3/4	1230	540	1220	530	1160	430	1140	420	1120	410
		7/8	1630	580	1610	570	1540	470	1520	460	1490	430
		1	2090	630	2060	610	1820	510	1770	490	1710	470
	2-1/2	1/2	730	410	730	400	700	360	690	340	680	340
		5/8	1070	540	1060	530	980	480	960	470	940	460
		3/4	1400	710	1380	700	1290	620	1270	600	1240	580
		7/8	1790	830	1770	810	1660	680	1640	660	1600	610
		1	2230	900	2210	880	2080	730	2060	700	2030	680
	3-1/2	1/2	730	470	730	470	700	430	690	410	690	400
		5/8	1140	620	1140	610	1090	550	1080	530	1070	520
		3/4	1650	780	1640	770	1540	680	1510	670	1470	660
		7/8	2100	960	2070	950	1910	870	1880	850	1840	820
		1	2550	1190	2520	1180	2340	1020	2310	980	2260	950

1. Tabulated lateral design values, Z, for bolted connections shall be multiplied by all applicable adjustment factors (see Table 10.3.1).
2. Tabulated lateral design values, Z, are for "full-body diameter" bolts (see Appendix Table L1) with bolt bending yield strength, F_{yb}, of 45,000 psi.
3. Tabulated lateral design values, Z, are based on dowel bearing strength, F_e, of 7,500 psi for concrete with minimum f'_c=2,500 psi.
4. Six inch anchor embedment assumed.

PROJECT : Westlake Village Park Restroom 18650
CLIENT : Romtec
JOB NO. : Romtec 216-23 DATE :

PAGE :
DESIGN BY : RMH
REVIEW BY :

Fastener Anchorage in Tension & Perpendicular Shear Based on TMS 402-11 / 2012 IBC

INPUT DATA & DESIGN SUMMARY

MASONRY STRENGTH	f_m'	=	1.5	ksi
FASTENER YIELD STRESS	f_y	=	60	ksi
SERVICE TENSION LOAD	b_a	=	0	kips / ft
SERVICE SHEAR LOAD	b_v	=	0.28	kips / ft
WALL THICKNESS	b	=	6	in
FASTENER DIAMETER	ϕ	=	1/2	in
EFFECTIVE EMBEDMENT	L_b	=	6	in
FASTENER SPACING	S	=	48	in
ALLOWABLE INCREASING ? (IBC/CBC 1605.3.2)			Yes	

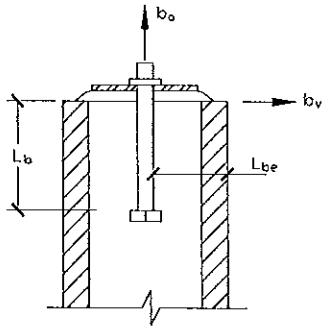

SECTION

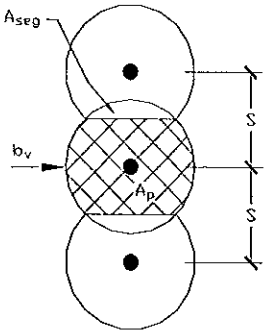

PLAN

[THE ANCHORAGE DESIGN IS ADEQUATE.]

ANALYSIS

CHECK MIN. EMBEDMENT (TMS 402 1.17.6)

$L_{b,min}$ = MIN[4ϕ , 2] = 2.00 in < L_b [SATISFACTORY]

CHECK TENSION CAPACITY (TMS 402 2.1.4.3.1.1)

B_a = MIN[$1.25A_{pt}(f_m')^{0.5}$, $0.6A_bf_y$] = 1.00 kips / fasteners

> k S b_a [SATISFACTORY]

Where L_{be} = 2.57 in

L = MIN[L_b , L_{be}] = 2.57 in, conservative value

$\theta = COS^{-1}(0.5S / L)$ = 0.00 rad

$A_{seg} = L^2 [\theta - 0.5 SIN(2\theta)]$ = 0.00 in^2

$A_{pt} = \pi L^2 - 2 A_{seg}$ = 20.67 in^2 (TMS 402 1.17.2)

$A_b = \pi \phi^2 / 4$ = 0.20 in^2

k = 3/4

CHECK SHEAR CAPACITY (TMS 402 2.1.4.2.3)

B_v = MIN[$1.25A_{pv}(f_m')^{0.5}$, $350(A_bf_m')^{1/4}$, $2.5A_{pt}(f_m')^{0.5}$, $0.36A_bf_y$] = 1.00 kips / fasteners

> k S b_v [SATISFACTORY]

Where $A_{pv} = A_{pt}$ = 20.67 in^2, since L = MIN[L_b , L_{be}] used above, (TMS 402 1.17.3)

CHECK COMBINED SHEAR AND TENSION CAPACITY (TMS 402 2.1.4.3.3)

S b_a / B_a + S b_v / B_v = 1.12 < 1.33 [SATISFACTORY]

5.03 PRODUCT DATA SHEETS

Product Data Sheet Section

This section corresponds with the plan set, describing each component supplied by Romtec in the building kit. The data sheets may be submitted for approval by the reviewing authority and are for use in construction of the building.

***Note*: Romtec's proposal and quote were based on the configuration of components that is reflected in the following data sheets. Any request for changes to the proposed components may result in a price increase. This includes requests for options that are shown on the manufacturer data sheets, as well as any color or finish requests.**

The product data sheets are organized as follows:

5.03.1 STRUCTURE
5.03.2 EXTERIOR
5.03.3 FIXTURES
5.03.4 ACCESSORIES

5.03.1 STRUCTURE

Data sheets to follow.

MORTAR JOINT
Smooth Face Block
Color: Gray

NCMA TEK

National Concrete Masonry Association
an information series from the national authority on concrete masonry technology

TYPICAL SIZES AND SHAPES OF CONCRETE MASONRY UNITS

TEK 2-1A
Unit Properties (2002)

Keywords: architectural units, bond beams, concrete brick, dimensions, equivalent thickness, lintels, screen block, sizes and shapes

INTRODUCTION

Concrete masonry is one of the most versatile building products available because of the wide variety of appearances that can be achieved using concrete masonry units. Concrete masonry units are manufactured in different sizes, shapes, colors, and textures to achieve a number of finishes and functions. In addition, because of its modular nature, different concrete masonry units can be combined within the same wall to achieve variations in texture, pattern, and color.

Certain concrete masonry sizes and shapes are considered standard, while others are popular only in certain regions. Local manufacturers can provide detailed information on specific products, or the feasibility of producing custom units. A more complete guide to concrete masonry units is the *Shapes and Sizes Directory* (ref. 2).

UNIT SIZES

Typically, concrete masonry units have nominal face dimensions of 8 in. (203 mm) by 16 in. (406 mm), available in nominal thicknesses of 4 , 6, 8, 10, and 12 in. (102, 152, 203, 254, and 305 mm). Nominal dimensions refer to the module size for planning bond patterns and modular layout with respect to door and window openings. Actual dimensions of concrete masonry units are typically 3/8 in. (9.5 mm) less than nominal dimensions, so that the 4 or 8 in. (102 or 203 mm) module is maintained with 3/8 in. (9.5 mm) mortar joints. Figure 1 illustrates nominal and actual dimensions for a nominal 8 x 8 x 16 in. (203 x 203 x 406 mm) concrete masonry unit. In addition to these standard sizes, other unit heights, lengths, and thicknesses may be available from local concrete masonry producers.

Standard Specification for Load-Bearing Concrete Masonry Units, ASTM C 90 (ref. 5) is the most frequently referenced standard for concrete masonry units. ASTM C 90 includes minimum face shell and web thicknesses for

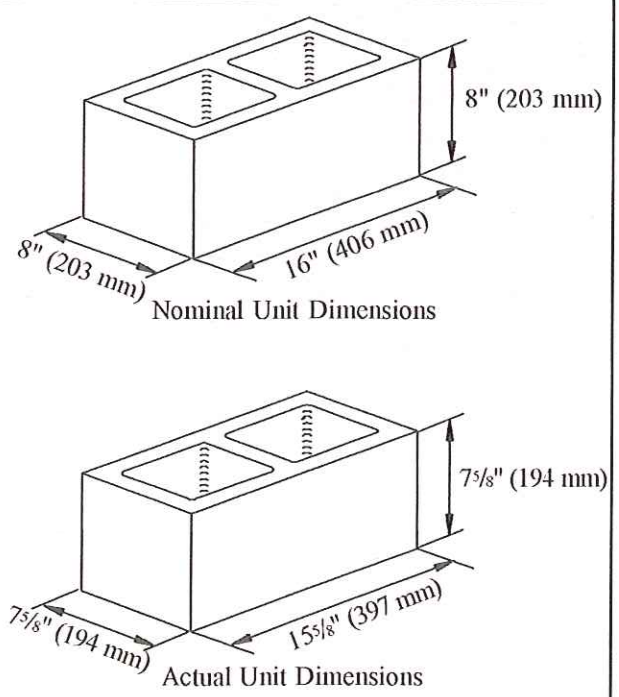

Figure 1—Nominal and Actual Unit Dimensions

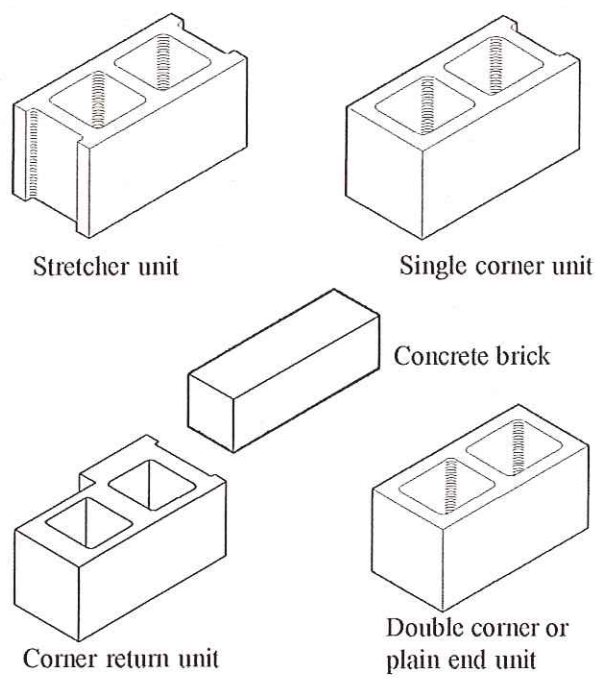

Figure 2—Typical Concrete Masonry Units

TEK 2-1A © 2002 National Concrete Masonry Association

the different sizes of concrete masonry units as listed in Table 1. Overall unit dimensions (height, width, or length) are permitted to vary by ±1/8 in. (3.2 mm) from the dimensions specified by the manufacturer. Where required, units may be manufactured to closer tolerances than those permitted in ASTM C 90. ASTM C 90 also defines the difference between hollow and solid concrete masonry units. The net cross-sectional area of a solid unit is at least 75% of the gross cross-sectional area.

In addition to the "standard" sizes listed above, concrete brick is available in typical lengths of 8 and 16 in. (203 and 406 mm), nominal 4 in. (102 mm) width, and a wide range of heights. They may be 100% solid, or may have two or three cores. Like ASTM C 90, *Standard Specification for Concrete Building Brick*, ASTM C 55 (ref. 4), permits overall unit dimensions to vary ±1/8 in. (3.2 mm) from the dimensions specified by the manufacturer. Nominal dimensions of modular concrete brick equal the actual dimensions plus 3/8 in. (9.5 mm), the thickness of one standard mortar joint. However, nominal dimensions of nonmodular sized concrete brick usually exceed the standard dimensions by 1/8 to 1/4 in. (3.2 to 6.4 mm).

Table 1—Minimum Thickness of Face Shells and Webs (ref. 5)

Nominal width of unit, in. (mm)	Face shell thickness[a], in. (mm)	Web thickness: Webs[a], in. (mm)	Web thickness: Equivalent web thickness, in./linear foot[b,c] (mm/m)
3 (76) and 4 (102)	3/4 (19)	3/4 (19)	1 5/8 (136)
6 (152)	1 (25)[d]	1 (25)	2 1/4 (188)
8 (203)	1 1/4 (32)[d]	1 (25)	2 1/4 (188)
10 (254)	1 3/8 (35)[d] 1 1/4 (32)[d,e]	1 1/8 (29)	2 1/2 (209)
12 (305)	1 1/2 (38) 1 1/4 (32)[d,e]	1 1/8 (29)	2 1/2 (209)

[a] Average of measurements on 3 units taken at the thinnest point when measured as described in ASTM C 140 (ref. 3). When this standard is used for split face units, a maximum of 10% of a split face shell area is permitted to have thicknesses less than those shown, but not less than 3/4 in. (19.1 mm). When the units are solid grouted, the 10% limit does not apply.

[b] Average of measurements on 3 units taken at the thinnest point when measured as described in ASTM C 140. The minimum web thickness for units with webs closer than 1 in. (25.4 mm) apart shall be 3/4 in. (19.1 mm).

[c] Sum of the measured thickness of all webs in the unit, multiplied by 12 and divided by the length of the unit. Equivalent web thickness does not apply to the portion of the unit to be filled with grout. The length of that portion shall be deducted from the overall length of the unit for the calculation.

[d] For solid grouted masonry construction, minimum face shell thickness not less than 5/8 in. (16 mm).

[e] This face shell thickness is applicable where allowable design load is reduced in proportion to the reduction in thickness from basic face shell thicknesses shown, except that allowable design loads on solid grouted units shall not be reduced.

UNIT SHAPES

Concrete masonry unit shapes have been developed for a wide variety of applications. The most common shapes are shown in Figure 2. Typically, the face shells and webs are tapered on concrete masonry units. Depending on the core molds used in the manufacture of the units, face shells and webs may be tapered with a flare at one end, or may have a straight taper from top to bottom. The taper provides a wider surface for mortar and easier handling for the mason.

The shapes illustrated in Figure 3 have been developed specifically to accommodate reinforcement. **Open-ended units** allow the units to be threaded around reinforcing bars. This eliminates the need to lift units over the top of the reinforcing bar, or to thread the reinforcement through the masonry cores

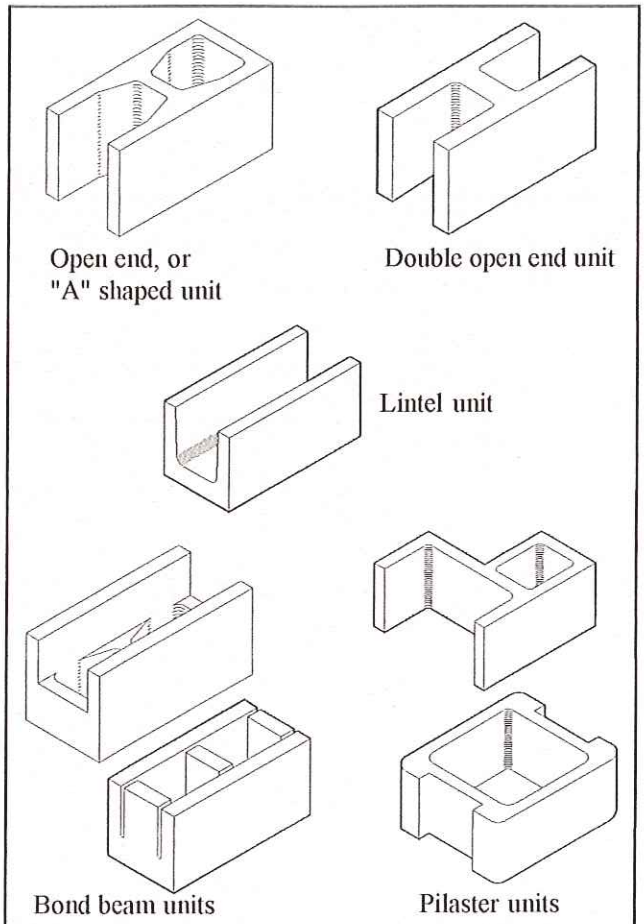

Figure 3—Shapes to Accommodate Reinforcement

after the wall is constructed. Bond beams in concrete masonry walls can be accommodated either by saw-cutting out of a standard unit, or by using **bond beam units.** Bond beam units are either manufactured with reduced webs or with "knock-out" webs, which are removed prior to placement in the wall. Horizontal bond beam reinforcement is easily accommodated in these units. **Lintel units** are similar to the U shaped bond beam units. Lintel units are available in various depths to carry appropriate lintel loads over door and window openings. The solid bottom confines grout to the lintel. **Pilaster and column units** are used to easily accommodate a wall-column or wall-pilaster interface, allowing space for vertical reinforcement in

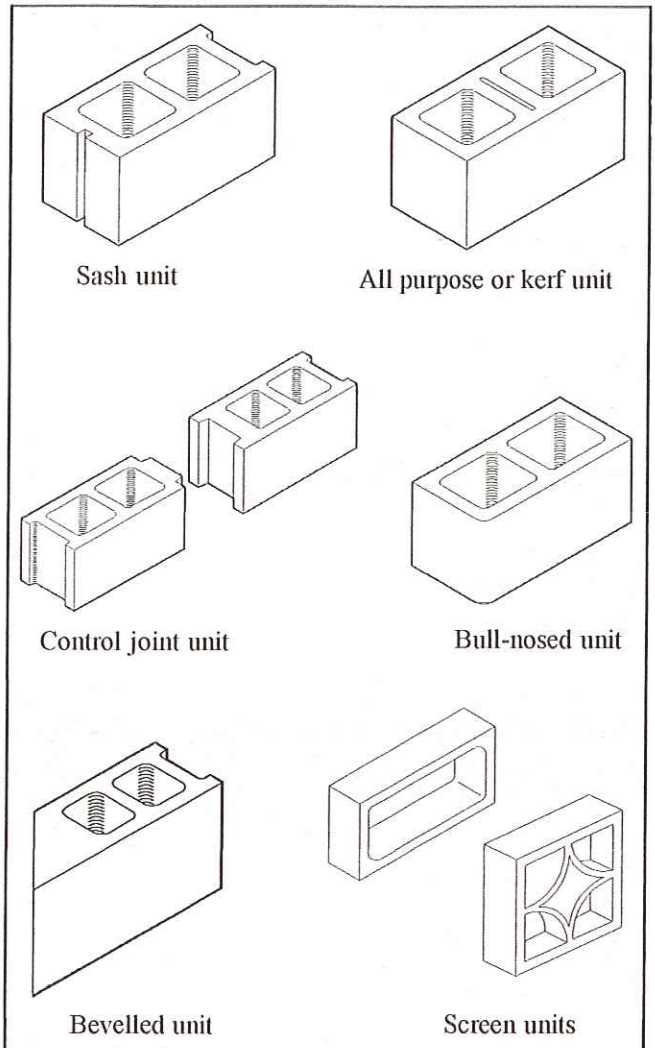

Figure 4—Special Shapes

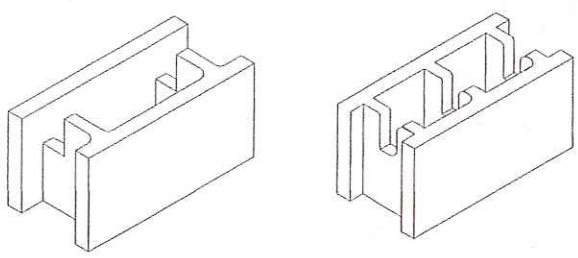

Figure 5—Examples of Concrete Masonry Units Designed For Energy Efficiency

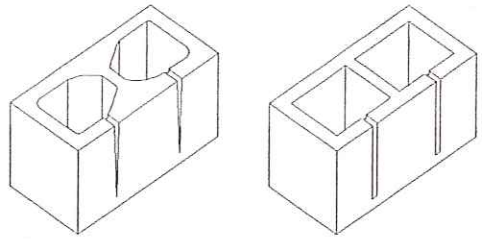

Figure 6—Examples of Acoustical Concrete Masonry Units

the hollow center.

Figure 4 shows units developed for specific wall applications. **Sash block** have a vertical groove molded into one end to accommodate a window sash. Sash block can be laid with the grooves adjacent to one another to accommodate a preformed control joint gasket. **Control joint units** are manufactured with one male and one female end to provide lateral load transfer across control joints. An **all-purpose or kerf unit** contains two closely spaced webs in the center, rather than the typical single web. This allows the unit to be easily split on the jobsite, producing two 8 in. (203 mm) long units, which are typically used adjacent to openings or at the ends or corner of a wall. **Bull-nosed units** are available with either a single or double bull nose, to soften corners. **Screen units** are available in many sizes and patterns. Typical applications include exterior fences, interior partitions, and openings within interior concrete masonry walls. **Bevelled-end units**, forming a 45° angle with the face of the unit, are used to form walls intersecting at 135° angles. Units in adjacent courses overlap to form a running bond pattern at the corner.

A variety of concrete masonry units are designed to increase energy efficiency. These units, examples of which are shown in Figure 5, may have reduced web areas to reduce heat loss through the webs. Web areas can be reduced by reducing the web height or thickness, reducing the number of webs, or both. In addition, the interior face shell of the unit can be made thicker than a typical face shell for increased thermal storage, and hence further increase energy efficiency. Insulating inserts can also be incorporated into standard concrete masonry units to increase energy efficiency.

Acoustical units (Figure 6) dampen sound, thus improving the noise reduction attributes of an interior space. Acoustical units are often used in schools, industrial plants, and churches, and to improve internal acoustics.

SURFACE FINISHES

The finished appearance of a concrete masonry wall can be varied with the size of units, shape of units, color of units and mortar, bond pattern, and surface finish of the units. The various shapes and sizes of concrete masonry units described above are often available in a choice of surface finishes. Some of the surfaces are molded into the units during the manufacturing process, while others are applied separately.

Figure 7 shows some of the more common surface textures available. Ribs, flutes, striations, offsets, and scores are accomplished by using a unit mold with the desired characteristics. Split-faced units are molded with two units face-to-face and then the units are mechanically split apart.

Glazed units are manufactured by bonding a permanent colored facing to a concrete masonry unit, providing a smooth impervious surface. Glazed units are often used for brightly-colored accent bands, and in gymnasiums, rest rooms, and indoor swimming pools where the stain and moisture resistant finish reduces maintenance. Glazed units comply to *Standard Specification for Prefaced Concrete and Calcium Silicate Masonry Units,* ASTM C 744 (ref. 6).

Ground-face units are ground to achieve a smooth finish which reveals the natural colors of the aggregates. Often, specific aggregates will be used to enhance the appearance.

For more information on surface finishes, see TEK 2-3A *Architectural Concrete Masonry Units* (ref. 1).

Figure 7—Examples of Surface Finishes Available For Concrete Masonry Units (clockwise from bottom left: split face with three scores; single score ground face; glazed corner unit; ground face; ground face; single score glazed ; split face; ground face; split face; center: eight-ribbed split face)

REFERENCES

1. *Architectural Concrete Masonry Units*, TEK 2-3A, National Concrete Masonry Association, 2001.
2. *Shapes and Sizes Directory*, National Concrete Masonry Association, 1995.
3. *Standard Methods of Sampling and Testing Concrete Masonry Units and Related Units*, ASTM C 140-01a$^{\varepsilon 1}$. American Society for Testing and Materials, 2001.
4. *Standard Specification for Concrete Building Brick*, ASTM C 55-01a. American Society for Testing and Materials, 2001.
5. *Standard Specification for Load-Bearing Concrete Masonry Units*, ASTM C 90-01a. American Society for Testing and Materials, 2001.
6. *Standard Specification for Prefaced Concrete and Calcium Silicate Masonry Units*, ASTM C 744-99. American Society for Testing and Materials, 1999.

Provided by:

Disclaimer: Although care has been taken to ensure the enclosed information is as accurate and complete as possible, NCMA does not assume responsibility for errors or omissions resulting from the use of this TEK.

NATIONAL CONCRETE MASONRY ASSOCIATION
13750 Sunrise Valley Drive, Herndon, Virginia 20171
www.ncma.org

To order a complete TEK Manual or TEK Index, contact NCMA Publications (703) 713-1900

STEELCRAFT®

F16 AND F14-SERIES FLUSH FRAMES

HD X-HD

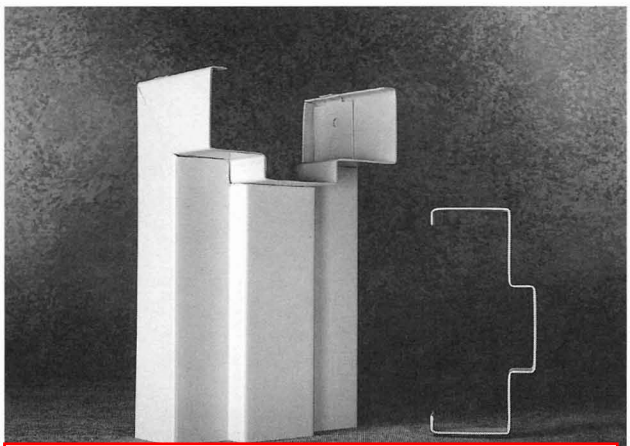

POWDER COAT COLOR: RAL 7011

ABOUT THE PRODUCT:

The F16 and F14-Series 3-Sided Flush Frames are designed for heavy and extra-heavy duty applications in both commercial and institutional buildings. They can be installed in both interior and exterior locations, and in virtually all types of buildings and wall constructions. These frames are to be installed as part of the wall framing sequence. They can be specified and/or supplied as either KD (knock-down) for field assembly prior to installation, or SUA (set-up and welded) for installation as a pre-welded unit.

APPLICATIONS:

The F-Series Frames are typically used in the following types of wall constructions:

Wall Construction	Application	Typical Wall Anchors
Masonry	wrap or butted	Wire masonry
Existing masonry	butted	Bolted through soffit
Wood stud	wrap	Lock-in wood stud anchor
Steel stud	wrap	Lock-in steel stud anchor

FEATURES AND BENEFITS:

Steelcraft F-Series Flush Frames offer the following unique features, which enhance long term functionality and durability:

1. **Die-mitered corner connections** (head/jamb) Standard corners insure attractive, tight and closed miters.
2. **Patented universal hinge preparations** allow for easy field conversion from standard weight (.134) hinges to heavy weight (.180) hinges.
3. **Adjustable base anchors** allow for installation adjustment when the floor is not level.
4. **Rubber silencers** are factory installed.
5. **Factory applied baked on rust inhibiting primer** in accordance with ANSI A250.10.

SPECIFICATION COMPLIANCE:

1. Overall frame construction for the Steelcraft F16 and F14-Series Flush Frames meet the requirements of ANSI A250.8-1998 (commonly referred to as SDI-100).
2. Hardware preparations and reinforcements are in accordance with ANSI A250.6-1997. Locations are in accordance with ANSI/DHI A115.

FIRE RATINGS:

The F-Series Frames meet the broadest fire rating requirements. They are listed for installations requiring compliance to both negative pressure testing (ASTM E152 and UL-10B) and positive pressure standards (UBC 7-2 and UL-10C). Refer to the "Fire Rated" section of the Steelcraft Spec Manual for particular listings.

Steel Thickness	Opening	Usage Frequency[1]	Applications
14 gage (1.7mm)	Interior & Exterior	Extra-heavy to Maximum duty	• 16 & 14 gage steel doors
16 gage (1.3mm)	Interior & Exterior	Heavy to Extra-heavy duty	• 20, 18 & 16 gage steel doors • Commercial grade wood doors
Steel Type	**Opening**	**Applications**	
CRS	Mainly Interior	• Typical building conditions	
Galvannealed[2]	Mainly Exterior	• Used in locations with high humidity and/or weather exposure	

MATERIAL:

F-Series Frames are supplied from either 14 gage (1.7mm) or 16 gage (1.3mm) steel. Depending on environmental and usage conditions, the steel can be either cold rolled steel (CRS) or galvannealed. All frames are supplied with a factory applied baked on primer for ultimate field paint adhesion.

[1] Usage frequency is based on ANSI A250.8-1998
[2] Reinforcements for galvannealed frames are also galvannealed

Details are subject to change without prior notice.

© 1999 Steelcraft Co.
Printed in USA

POWDER COAT COLOR FOR DOORS & FRAMES

TIGER Drylac®

ral colors

exterior powder coatings

TIGER Drylac® Powder Coatings

RAL **5005** 49/43190 38/40010	RAL **5019** 49/42360 38/40019	RAL **6006** 49/52870 38/50006	RAL **6016** 49/51020 38/50016	RAL **6027** 49/50990 38/50027	RAL **7006** 49/72580 38/70006
RAL **5007** 49/42250 38/40007	RAL **5020** 49/44270 38/40018	RAL **6007** 49/52860 38/50007	RAL **6017** 49/52780 38/50017	RAL **6028** 49/52650 38/50028	RAL **7008** 49/72570 38/70008
RAL **5008** 49/42260 38/40008	RAL **5021** 49/41190 38/40021	RAL **6008** 49/53240 38/50008	RAL **6018** 49/52720 38/50018	RAL **6029** 49/52640 38/50029	RAL **7009** 49/72770 38/70009
RAL **5009** 49/42270 38/40009	RAL **5022** 49/42390 38/40022	RAL **6009** 49/52840 38/50009	RAL **6019** 49/51000 38/50019	RAL **6032** 49/52630 38/50032	RAL **7010** 49/72560 38/70014
RAL **5010** 49/42280 38/40016	RAL **5023** 49/44650 38/40023			RAL **6033** 49/55010 38/50033	RAL **7011** 49/72790 38/70011
RAL **5011** 49/43180 38/40011	RAL **5024** 49/44660 38/40024			RAL **6034** 49/55020 38/50034	RAL **7012** 49/71180 38/70012
RAL **5012** 49/43170 38/40012	RAL **6000** 49/53160 38/50000	RAL **6010** 49/52830 38/50031	RAL **6020** 49/52710 38/50020	RAL **7000** 49/72700 38/70000	RAL **7013** 49/72550 38/70013
RAL **5013** 49/42310 38/40013	RAL **6001** 49/52900 38/50005	RAL **6011** 49/52820 38/50011	RAL **6021** 49/52700 38/50021	RAL **7001** 49/72710 38/70003	RAL **7015** 49/72820 38/70015
RAL **5014** 49/42320 38/40014	RAL **6002** 49/52890 38/50023	RAL **6012** 49/51540 38/50012	RAL **6022** 49/52690 38/50022	RAL **7002** 49/72720 38/70007	RAL **7016** 49/72830 38/70016
RAL **5015** 49/42330 38/40015	RAL **6003** 49/52880 38/50003	RAL **6013** 49/52810 38/50013	RAL **6024** 49/52680 38/50024	RAL **7003** 49/72600 38/70017	RAL **7021** 49/72540 38/70021
RAL **5017** 49/40760 38/40017	RAL **6004** 49/50980 38/50004	RAL **6014** 49/52800 38/50014	RAL **6025** 49/52670 38/50025	RAL **7004** 49/73300 38/70004	RAL **7022** 49/72850 38/70022
RAL **5018** 49/41140 38/40020	RAL **6005** 49/50670 38/50002	RAL **6015** 49/52790 38/50015	RAL **6026** 49/52660 38/50026	RAL **7005** 49/72590 38/70005	RAL **7023** 49/72530 38/70023

VELUX®

EDM +

FS, VS, VSE, GGL, GPL

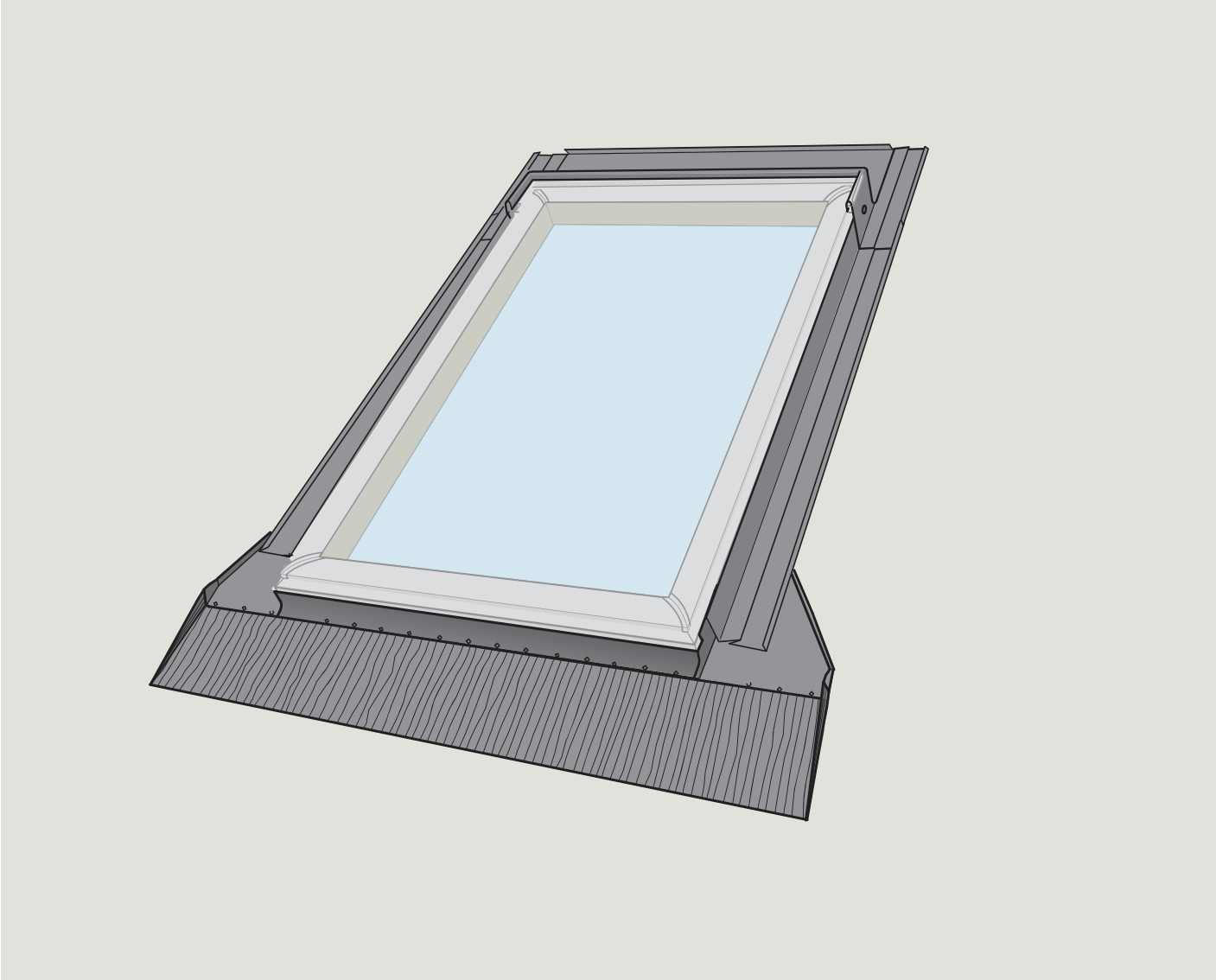

[redacted]

VAS 452232-0909

3 layers of water protection.

Now with the new deck seal technology

1. Introducing a third layer of water protection. The pre-attached deck seal on all deck mounted skylights provides a foam seal between the frame and roof deck for leak-proof installation.
2. Adhesive underlayment for secondary water protection against the harshest weather conditions.
3. Engineered flashing for easy installation and primary water protection.

Deck mounted skylight size chart (Rough openings)

14° - 85°

Inch – mm	14 1/2 – 368	21 – 533	22 1/2 – 572	30 1/16 – 763	44 1/4 – 1123
22 15/16 – 582			FS 150 D26		
29 7/8 – 760		FS; VS; VSE 101 C01			FS; VS; VSE 601 S01
30 – 762				FS 302 M02	
37 7/8 – 962		FS; VS; VSE 104 C04		FS; VS; VSE 304 M04	
45 3/4 – 1162	FS 056 A06	FS; VS; VSE 106 C06	FS 156 D06	FS; VS; VSE 306 M06	FS; VS; VSE 606 S06
54 7/16 – 1382		FS; VS; VSE 108 C08		FS; VS; VSE 308 M08	
70 1/4 – 1785		FS 112 C12			

Small figures in chart are the old model sizes

Deck mounted skylight flashing

Model	Installation	Roofing
EDL	Single	Shingle/Slate (14°- 85° roof pitch)
EDW	Single	Tile (14°- 85° roof pitch)
EDM	Single	Metal (14°- 85° roof pitch)
EKL	Gang	Shingle/Slate (14°- 85° roof pitch)
EKW	Gang	Tile (14°- 85° roof pitch)
ECB*	Low pitch; single	Site built curb (14°- 85° roof pitch)

* Does not come with VELUX adhesive skylight underlayment, and is not covered by the No Leak Warranty.

VELUX®

www.thenoleakskylight.com

Deck mounted skylight codes

FS C06 2 0 0 4

Model
- FS
- VS
- VSE

Sizes
- A06
- C01
- C04
- C06
- C08
- C12
- D26
- D06
- M02
- M04
- M06
- M08
- S01
- S06

Interior finish
- 0 Natural wood
- 2 White
- 9 Special

Cladding
- 0 Aluminum
- 1 Copper
- 9 Special

Glazings
- 04 Low E/ Lami (74)
- 05 Low E/ Temp (75)
- 06 Impact
- 08 White lami
- 10 Snowload
- 99 Special

Deck mounted roller blinds

New model (A21)	Old model	Description
RFD	RAF	Manual for model FS
RMD	———	Electric for model FS
RSD	———	Solar for model FS
RSH	———	Solar for model VS
RMH	———	Electric for model VSE

Deck mounted blackout blinds

New model (A21)	Old model	Description
DKD	———	Manual for model FS
DMD	DMF	Electric for model FS
DSD	DSF	Solar for model FS
DSH	———	Solar for model VS
DMH	DMA	Electric for model VSE

Deck mounted venetian blinds

New model (A21)	Old model	Description
PAD	PFF	Manual for model FS
PMD	PMF	Electric for model FS
PMH	PMA	Electric for model VSE

Deck mounted optional accessories and controls

New model (A21)	Old model	Description
ZZZ 201	ZZZ 16/9W	Crank handle
ZZZ 202	ZZZ 17/9W	Replacement hook
ZZZ 203	———	Eyelet with universal joint
ZZZ 208	———	2" Handle extension
ZCT/ZMT 300	ZCT/ZMT 300	Telescopic rod
KLC 500	WLC 160	Power supply
KLI 110	WLI 160	Wall keypad
KLR 100	WLR 160	RF remote
KLF 100	———	Interface beacon
KLB 100	———	Battery backup
ZZZ 213	ZZZ 189	Trim kit

XUS 20192-1009
©2009 VELUX Group
„VELUX, VELUX logo are registered trademarks

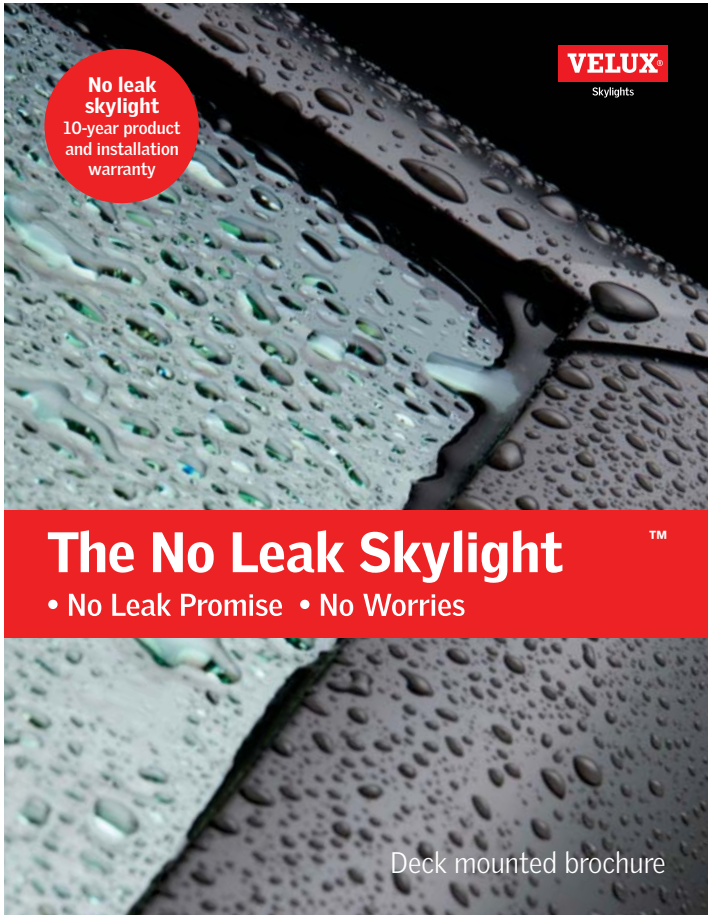

Models VSE and VS

14° - 85°
3:12 - 137:12

New size code (Old size code)		C01 (101)	C04 (104)	C06 (106)	C08 (108)	M04 (304)	M06 (306)	M08 (308)	S01 (601)	S06 (606)
Outside frame	in.	21 1/2 x 27 3/8	21 1/2 x 38 3/8	21 1/2 x 46 1/4	21 1/2 x 54 15/16	30 9/16 x 38 3/8	30 9/16 x 46 1/4	30 9/16 x 54 15/16	44 3/4 x 27 3/8	44 3/4 x 46 1/4
Rough opening	in.	21 x 26 7/8	21 x 37 7/8	21 x 45 3/4	21 x 54 7/16	30 1/16 x 37 7/8	30 1/16 x 45 3/4	30 1/16 x 54 7/16	44 1/4 x 26 7/8	44 1/4 x 45 3/4
Daylight Area	in.	16 x 20.44	16 x 31.5	16 x 39.38	16 x 48	25 x 31.5	25 x 39.38	25 x 48	30.25 x 20.44	39.25 x 39.38
Ventilation Area	sq. ft.	2.60	3.56	4.14	4.71	4.17	4.75	5.32	4.31	5.84

Model FS

14° - 85°
3:12 - 137:12

New size code (Old size code)		A06 (056)	C01 (101)	C04 (104)	C06 (106)	C08 (108)	C12 (112)	D26 (150)	D06 (156)	M02 (302)	M04 (304)	M06 (306)	M08 (308)	S01 (601)	S06 (606)
Outside frame	in.	15 1/4 x 46 1/4	21 1/2 x 27 3/8	21 1/2 x 38 3/8	21 1/2 x 46 1/4	21 1/2 x 54 15/16	21 1/2 x 70 3/4	23 1/4 x 23 7/16	23 1/4 x 46 1/4	30 9/16 x 30 1/2	30 9/16 x 38 3/8	30 9/16 x 46 1/4	30 9/16 x 54 15/16	44 3/4 x 27 3/8	44 3/4 x 46 1/4
Rough opening	in.	14 1/2 x 45 3/4	21 x 26 7/8	21 x 37 7/8	21 x 45 3/4	21 x 54 7/16	21 x 70 1/4	22 1/2 x 22 15/16	22 1/2 x 45 3/4	30 1/16 x 30	30 1/16 x 37 7/8	30 1/16 x 45 3/4	30 1/16 x 54 7/16	44 1/4 x 26 7/8	44 1/4 x 45 3/4
Daylight Area	in.	11 15/16 x 42 15/16	18 3/16 x 24 1/16	18 3/16 x 35 1/16	18 3/16 x 42 15/16	18 3/16 x 51 5/8	18 3/16 x 67 7/16	19 15/16 x 20 1/8	19 15/16 x 42 15/16	27 1/4 x 27 3/16	27 1/4 x 35 1/16	27 1/4 x 42 15/16	27 1/4 x 51 5/8	41 7/16 x 24 1/16	41 7/16 x 42 15/16

Model FS sizes D26 and D06 fit perfectly between roof trusses.

Model GDL CABRIO™

35.25°- 53°
8.5:12 - 15:12

Size code		P19
Outside frame	in.	37 1/16 x 99 1/4
Rough opening	in.	39 3/8 x 101
Daylight area (upper section)	in.	30 x 53 1/4
Daylight area (lower section)	in.	30 x 28 3/4
Ventilation area (upper section)	sq. ft.	22.5
Ventilation area (flap)	sq. in.	36.7
Net wt (w/ Lam. glass)	lbs.	160

Model GPL

18.5°- 55°
4:12 - 17:12

Size code		M08	S06
Outside frame	in.	30 5/8 x 55	44 3/4 x 46 3/8
Rough opening	in.	31 1/4 x 55 1/2	45 1/4 x 46 7/8
Daylight area (glass)	in.	23 3/4 x 45 1/4	37 15/16 x 36 5/8
Ventilation area (opening)	sq. ft.	11.34	11.64
Ventialtion area (flap)	sq. in.	30.00	47.81
Net wt. (w/ Lam. glass)	lbs.	111	123

Residential Metal Roofing

for the WESTERN REGION

FABRAL
METAL WALL AND ROOF SYSTEMS

Fabral makes residential and light commercial roofing a snap.

The elements can be tough on roofing materials, but Fabral's residential products, Horizon 16 and Ultra-Loc 16, are up to the task. Tough, 26 gauge, metal construction will bring maximum protection, low maintenance, long-lasting beauty and distinctive aesthetics to your home.

Metal roofing is made to withstand the elements; it is weather, wind, fire, insect and hail resistant and will protect your investment for years to come. Fabral residential roofing products can also be installed over any solid decking. For great looks and maximum performance choose Fabral.

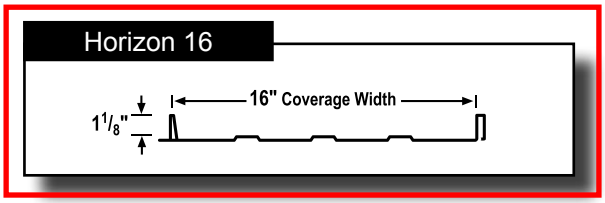

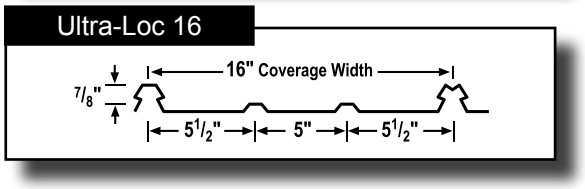

- Stiffening ribs for added strength
- Light weight, energy efficient and fire resistant
- Easy to install-can be installed over solid decking or over an existing roof
- Time tested design
- Fade-resistant paint system with a lifetime finish warranty for years of low maintenance beauty
- 10 popular colors, 9 Energy Star Approved

ROOFING COLOR

White 899 • IR = .56	Charcoal Gray 851 • IR = .35
Light Gray 889 • IR = .31	Evergreen 875 • IR = .27
Caribbean Blue 881 • IR = .26	Hartford Green 821 • IR = .29
Brick Red 898 • IR = .32	Antique Bronze 854 • IR= .29
Classic Burgundy 853 • IR = .30	Bright Copper Penny 939

ENDURACOTE™ PREMIUM DEFENSE Against the Elements

ENERGY STAR PARTNER

Colors shown are as close to actual colors as allowed by the printing process. Actual metal samples are available; request samples prior to installation. Due to product improvements, changes and other factors, FABRAL reserves the right to change or delete information here-in without prior notice. IR= Initial Reflectivity. All standard colors - less Bright Copper Penny - for the Horizon 16 and Ultra-Loc 16 are Energy Star approved. Oil canning can be caused by many factors and is not cause for rejection. If oil canning occurs, the installation of an ethofoam backer rod under the center of the panels can significantly improve the appearance.

WET STACK STORAGE DAMAGE

Storage stain, an orange peel effect on painted sheets or white rust on Galvanized sheets, and black rust on Galvalume sheeting is the surface corrosion that occurs on when sheets get wet while tightly bundled (in skids of flat stock sheets/roll-formed panels), moisture can get between stacked panels either through capillary action or atmospheric humidity. If panels are not separated and allowed to dry, the continual wetness will prevent the formation of protective passive film on the zinc surface. (the process also known as zinc scarifying itself)
The result is a stained, discolored or a paint blistered sheet for which it is virtually impossible to return to its original appearance.
To prevent storage stain, sheeting must be protected from contact with moisture whenever the sheets are in close contact (banded together in a skid) and free airflow is not available to dry the surface.

FABRAL alerts end users to the possibility of Wet Stack Issues with the following signage and literature:

WARNING: Metal Roofing and Siding Panels Must be installed within 30 days of delivery or the Warranty will be void. Trapped moisture between panels does not allow for air to circulate freely. Trapped moisture will cause paint to bubble and eventually lose adhesion or white rust. Please inspect material, defective material should not be installed. Please contact your FABRAL Engineered products distributor to report defective material. FABRAL is not responsible for labor claims on installation of defective material.

FABRAL typically tarps most Delta Rib and Grand Rib 3 Painted or Bare panels prior to shipping. Shipments covered in a tarp will have the above signage every 2' down the center of the tarp.
Panels shipped without tarps are protected by a cover sheet, cover sheets are an extra panel (sometimes 2 pcs) on top of the skid, that may or may not be the same color as the skid it is protecting, those panels will have a bright neon label (shown below) affixed to either the panel itself or the skidding.

FABRAL

METAL WALL AND ROOF SYSTEMS

Store metal panels indoors when possible; if outdoors, cover and elevate. Elevate one side higher for water drainage. Never cover in plastic; use a tarp that can breath. Allow for air circulation. If a bundle gets wet, break bands and separate sheets; allow sheets to dry completely and only restack if completely dry.

Product should be installed within 4 weeks of purchase and stored in accordance with our storage and installation manual. Storage and additional installation instructions enclosed.

Storage and Installation Instructions

FABRAL

METAL ROOFING AND SIDING
ALUMINUM AND GALVANIZED STEEL

(Plain and Painted)

IMPORTANT
PROPER STORAGE

When moisture remains in contact with Galvanized, Galvalume or Aluminum panels in the absence of freely circulating air, white, black, or dark gray corrosion products begin to form. Moisture can get between stacked panels either through capillary action or atmospheric humidity (if the temperature of the panels is below the dew point temperature of the surrounding air, condensation will form between the panels). If moisture becomes entrapped between the sheets, this condition can result in water stains or white rust, which can affect the service life of the metal and will detract from its appearance. If the metal panels will not be installed immediately, store them in a well-ventilated, dry area to minimize exposure to moisture. Cut the steel shipping bands and use wood blocking to elevate the panels at least 1 foot off the ground in an inclined position. This will allow circulation of air between the panels and provide positive drainage. If outdoor storage cannot be avoided, protect the metal with a breathable canvas or waterproof paper cover. Leave the bottom of the cover loose to allow air circulation between the sheets. ***Do NOT use plastic, which causes sweating or condensation.***

FABRAL
METAL WALL AND ROOF SYSTEMS

Headquarters:
Fax: (800)289-3383
Tifton GA Plant:
(800)339-8311
Fax: (800)380-4784

Marshfield WI Plant:

Salem OR Plant:
(800)477-8028
Fax: (503)393-5813

St. Joseph MN Plant:

Mooresburg TN Plant:
(800)500-0059
Fax: (423)272-5070

Columbia SC Plant:

FABRAL, in addition, includes a brochure with helpful information usually located in the stack within the top 2 or 3 panels. This brochure can also be located in FABRAL catalogs under the Technical or Installation tabs.

FABRAL, additionally, addresses proper storage, in their installation hand out.

DELIVERY, HANDLING & STORAGE

- Always inspect the shipment upon delivery. Check for damage and verify material quantities against the shipping list. Note any damaged material or shortages at the time of delivery.

- Handle panel bundles and individual panels with care to avoid damage. Longer bundles and panels may require two or more "pick points" properly spaced to avoid damage that can result from buckling and/or bending of the panels.

- Store the panels and other materials in a dry, well ventilated area, away from traffic. Elevate one end of the bundle so that any moisture that may have accumulated during shipping can run off. Be sure that air will be able to circulate freely around the bundles to avoid the build-up of moisture. Never store materials in direct contact with the ground.

- Wear clean, non-marking, soft soled shoes when walking on the panels to avoid shoe marks or damage to the finish. Step only in the flat area of the panels.

FABRAL
METAL WALL AND ROOF SYSTEMS

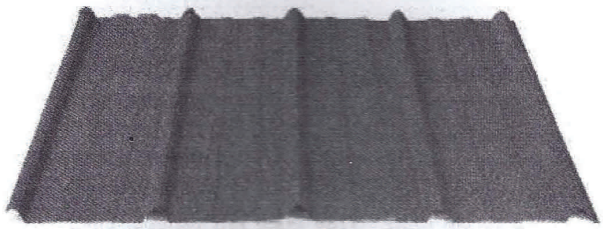

METAL ROOFING SYSTEM ORDERING & INSTALLATION SELF HELP GUIDE

Due to product improvements, changes and other factors, Fabral reserves the right to change or delete information herein without prior notice or obligation to make changes in products previously purchased.

FABRAL
METAL WALL AND ROOF SYSTEMS

Standard Details for Metal Roofing & Siding

Post Frame and Residential Structures

For the Western Region: Salem, OR, Spokane, WA, Cedar City, UT Service Areas

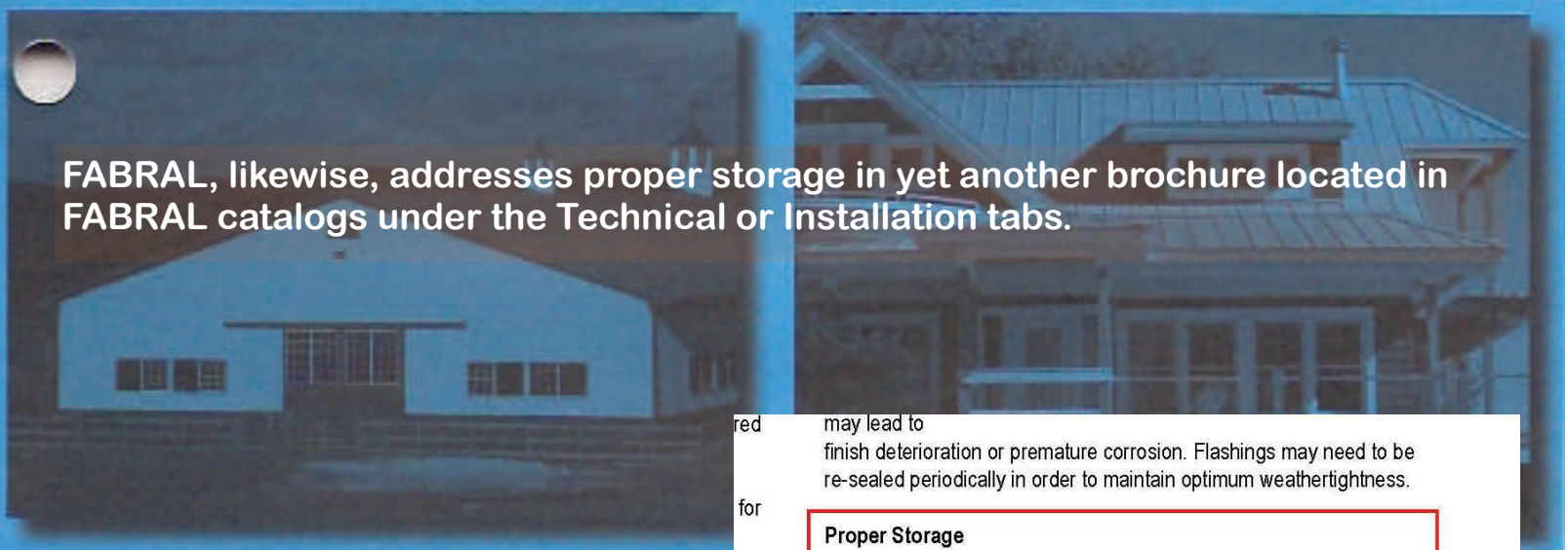

FABRAL, likewise, addresses proper storage in yet another brochure located in FABRAL catalogs under the Technical or Installation tabs.

red
for
use
ass
cial
for
ed.
Do
the
e to

may lead to
finish deterioration or premature corrosion. Flashings may need to be re-sealed periodically in order to maintain optimum weathertightness.

Proper Storage

Store metal panels indoors when possible; if outdoors, cover and elevate. Elevate one side higher for water drainage. Never cover in plastic; us a tarp that can breath. Allow for air circulation. If a bundle gets wet, break bands and separate sheets; allow sheets to dry completely and only restack if completely dry. **Product should be installed within 4 weeks of purchase and stored in accordance with our storage and installation manual.**

Disclaimer

The details and written instructions described in this manual are suggested installation methods to ensure a quality application of our products, and should be considered as a guildeline only.
FABRAL recognizes that installation techniques can vary based upon builder and geographical preferences, and that there are other acceptable ways to install our products.

Dektite® Pipe Flashings

- Range for normal applications.
- Pleated skirt adjusts to any roof pitch for stress-free connections.
- Ribbed base for increased sealant retention and superior water-proofing.
- Aluminium base can be shaped by hand to any known profile.
- Fixing kits available for easy installation. No specialist tools or labour required.

Description

Dektite flexible pipe flashings conform to any sheet profile or roof pitch providing faster installation and dramatically reduced maintenance.
When correctly fitted they eliminate all leaks and because they allow for movement between pipe and roof there is no risk of seal breakdown. With a life expectancy in excess of 20 years Dektite flashings are the ideal method of sealing pipes and services from soil vents to heating flues.

Size Range

The rubber sleeve can be trimmed to the exact OD required for a perfect fit, so fewer sizes are required. In fact just nine sizes cover all pipes from 5mm to 480mm.

TEMP. RANGE		SIZE	OUTSIDE DIA. OF PIPE	
Max 115° EPDM (grey)	Max 200° Silicone (red)	Base diameter	Flat or profiled sheet up to 40mm depth	Deep ribbed profiles – deeper than 40mm depth
Code No.		mm	mm	mm
DF101	-	120	5 to 65	5 to 55
DF102	-	160	50 to 75	50 to 65
DF103	DF203	195	5 to 120	5 to 110
DF104	DF204	235	75 to 160	75 to 135
DF105	DF205	275	115 to 195	115 to 170
DF106	DF206	325	125 to 230	125 to 195
DF107	DF207	370	150 to 275	150 to 225
DF108	DF208	420	175 to 325	175 to 270
DF109	DF209	650	250 to 480	250 to 420

Dektite® Retrofit Flashings

- For use in awkward applications or for repairing around failed flashings.
- Unique flexible closure system in stainless steel.
- Trim lines and sizes on sleeve aid accurate cutting for closest possible fit around pipe.
- Flexible rubber sleeve between independent seals at head and base allows freedom of movement between pipe and roof and reduces vibration and noise transmission.

Description

Dektite Retrofit flashings are the ideal solution for the elimination of leaks around pipes or other roof penetrations where existing flashings have failed. Providing a completely weatherproof seal, on any profiled sheet or pitch, Retrofit flashings are designed specifically for use where obstructions, bends and cowls prevent the application of a standard Dektite.
Retrofit flashings are quickly and easily installed by wrapping around the penetration and simply fixing down on to the roof sheet. This offers the opportunity for reliable flashings to be fitted retrospectively and dramatically reduces maintenance time and costs.

Size Range

The rubber sleeve can be trimmed to the exact OD required for a perfect fit, so far fewer different sizes are required. In fact just three sizes cover all pipes from 20mm to 255mm.

TEMP. RANGE	SIZE	OUTSIDE DIA. OF PIPE	
Max 115° EPDM (grey)	Base diameter	Flat or profiled sheet up to 40mm depth	Deep ribbed profiles – deeper than 40mm depth
Code No.	Code No.	mm	mm
RF801	160	20 to 70	20 to 60
RF802	275	50 to 190	50 to 160
RF803	370	85 to 255	85 to 215

RUST-OLEUM®

6000 SYSTEM WATER-BASED EPOXY

SUPPLIED BY INSTALLER.

DESCRIPTION AND USES

A two-component water-based epoxy coating for application to concrete floors. Combines the performance of solvent-based epoxies with the convenience of water-based coatings.

This coating is designed as a moderate duty floor coating. It resists heavy foot and occasional traffic of lightweight rubber-wheeled vehicles, such as handcarts and forklift trucks, as well as intermittent mild chemical spills, occasional steam, water and chemical cleaning and high humidity and moisture. As a water-based coating, it offers soap and water cleanup, low odor and low risk of flammability.

PRODUCTS

6010	Clear
6082	Silver Gray
6001	Activator
6068	Tile Red
6086	Navy Gray
6071	Dunes Tan
6092	White

PACKAGING

Short-filled 1 gallon containers to allow for addition of 1 pint containers of 6001 activator.

APPEARANCE

High-gloss finish.

PRODUCT APPLICATION

SURFACE PREPARATION

NEW, UNCOATED CONCRETE: Remove oil, dirt, grease and other chemical contaminants by cleaning with 3599 Industrial Pure Strength® Cleaner/Degreaser, detergent, or other suitable cleaner. Rinse with water. Etch concrete with 108 Cleaning & Etching Solution. Rinse thoroughly and immediately, and allow to dry. After acid etching the concrete should have a surface profile that resembles fine grit sandpaper. If not, repeat the process. New concrete should be allowed to cure for 30 days before application of any coating. If there is any doubt about the dryness of the concrete, conduct a test by simply placing a weighted rubber mat, plastic sheet or other non-porous material on the surface for 24 hours. Check the underside of the mat and concrete for signs of moisture. The substrate will be darker if damp. If moisture is found, allow additional drying time (10-14 days) and repeat test. If moisture persists concrete surface cannot be coated. Very dense, non-porous or chemically treated concrete may require shotblasting to assure proper coating adhesion. Determine porosity by pouring one ounce of water onto the concrete. If water soaks in, the surface is porous enough for coating. If water beads up on the concrete, the surface is not porous and treatment is warranted. The presence of laitance (fine white particles) will also require shot blasting or abrading to assure removal.

PREVIOUSLY COATED: Remove loose dirt, dust and previous coating by sweeping or vacuum concrete cleaning. Remove grease, oil, floor compound or wax as indicated above under **new, uncoated concrete**. Very glossy or hard coatings should be lightly sanded to insure maximum adhesion. The floor system will not lift most previous coatings. Concrete floor areas which require patching should be free of dirt, oil, grease and other chemical contaminants as indicated above under **new, uncoated concrete**. Loose concrete and deteriorated previous paint must be removed. The 5499 Concrete Patching Compound can then be trowel applied and allowed to cure four hours before applying a coating.

Form: 2033990
Rev.: 07/06
Printed in USA

PRODUCT APPLICATION (cont.)

MIXING

Premix base component to re-disperse settled pigment before adding the 6001 Activator. Mix in one pint of activator to the short filled base component and allow thematerial to set for 30 minutes before using.

APPLICATION

Apply only when air and surface temperatures are between 60-100°F (15-38°C), surface is at least 5°F above the dew point and relative humidity is below 85% during and after application. Apply by roller using a good quality 1/4" synthetic nap cover. On new or uncoated concrete, two coats of product should be applied. The first coat should be thinned 20% with water to assure penetration into the concrete surface. The first coat may be spread out using a rubber squeegee, then back roll to smooth out the finish. Apply the second coat by roller. Recoat previously coated floors by roller only. This coating can tolerate application to damp surfaces; however, conditions must be favorable to allow the moisture to evaporate. Applications done at low humidity conditions (less than 15%) may result in lower initial gloss; however, this will not negatively affect performance. Allow coated floor to cure 7 days before mopping or washing. Use 200 Anti-Skid Floor Coating Additive for skid resistance where oil or water spillage is a problem.

CLEAN-UP

Soap and water. Once coating begins to cure, 160 Thinner or MEK may be required.

Form: 2033990
Rev.: 07/06
Printed in USA

PHYSICAL PROPERTIES

Resin Type		Polyamine Epoxy
Pigment Type		Varies
Solvents		Water, propoxyethanol, aromatic hydrocarbons
Weight*	**Per Gallon**	10-11 lbs.
	Per Liter	—
Solids*	**By Weight**	37-55%
	By Volume	33-37%
Volatile Organic Compounds*		<250 g./l. (2.08 lbs./gal.)
pH		7.8-8.9
Recommended Dry Film Thickness (DFT) Per Coat		1.5-2.5 mils
Wet Film to Achieve DFT		4.0-6.5 mils
Theoretical Coverage at 1 mil DFT (25µ)		500-600 sq. ft./gal.
Practical Coverage at Recommended DFT (assumes 15% material loss)		200-350 sq.ft./gal.
Mixing Ratio		7:1 base to activator
Induction Period		30 minutes
Pot Life @ 70-80°F & 50% RH		6-8 hours
Dry Times at 70-80°F (21-27°C) and 50% Rel. Hum.	**Recoat**	1-2 hours
	Light traffic	16 hours
	Vehicle traffic	72 hours
Dry Heat Resistance		300°F
Shelf Life		5 years
Safety Information	**Flash Point**	>205°F (96°C)
	Contains	—
	Warning!	**CAUTION. COMBUSTIBLE. MAY CAUSE IRRITATION. FOR INDUSTRIAL OR COMMERCIAL USE ONLY. REFER TO MATERIAL SAFETY DATA SHEET (MSDS) AND LABEL FOR ADDITIONAL SAFETY INFORMATION.**

*Activated material.

Calculated values are shown and may vary slightly from the actual manufactured material.

Form: 2033990
Rev.: 07/06
Printed in USA

The technical data and suggestions for use contained herein are correct to the best of our knowledge, and offered in good faith. The statements of this literature do not constitute a warranty, express, or implied, as to the performance of these products. As conditions and use of our materials are beyond our control, we can guarantee these products only to conform to our standards of quality, and our liability, if any, will be limited to replacement of defective materials. All technical information is subject to change without notice.

RUST-OLEUM®
INDUSTRIAL BRANDS

Rust-Oleum Corporation
11 Hawthorn Parkway
Vernon Hills, Illinois 60061
An RPM Company

Phone: 847•367•7700
www.rustoleum.com

Form: 2033990
Rev.: 07/06
Printed in USA

5.03.2 EXTERIOR

Data sheets to follow.

Modular Flat

Closure Flat

Modular Corner

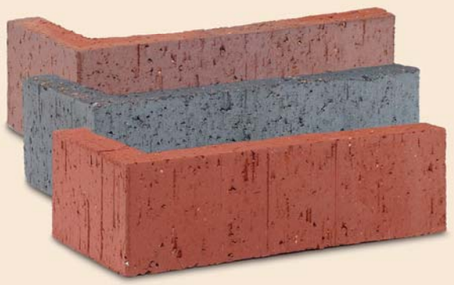

Closure Corner

Specifications

All Pacific Clay Thin Line meet or exceed the requirements of specification ASTM-C-1088, type TBX & TBS (Reroll Texture)

Modular Flat

Size: 5/8" x 2-1/4" x 7-5/8"
Weight: .75 lb. per piece
Coverage: 6.7 pieces per sq. ft.
(using 3/8" grout line)
Packaging: 60 pieces per box, 40 boxes per pallet

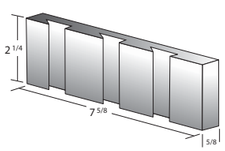

Closure Flat

Size: 1/2" x 3-5/8" x 7-5/8"
Weight: 1.07 lbs. per piece
Coverage: 4.5 pieces per sq. ft.
(using 3/8" grout line)
Packaging: 60 pieces per box, 32 boxes per pallet

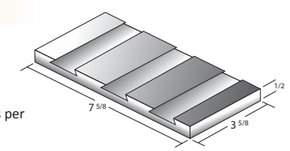

Modular Corner

Size: 5/8" x 2-1/4" x 7-5/8" x 3-5/8" (return)
Weight: 1.06 lbs. per piece
Coverage: 5 pieces per linear foot
(using 3/8" grout line)
Packaging: 30 pieces per box, 40 boxes per pallet

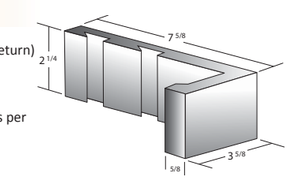

Closure Corner

Size: 1/2" x 3-5/8" x 7-5/8" x 3-5/8"(return)
Weight: 1.7 lbs. per piece
Coverage: 3 pieces per lineal foot
(using 3/8" grout line)
Packaging: 30 pieces per box, 32 boxes per pallet

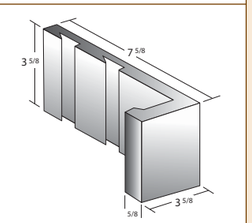

Bricks in this brochure were photographed and printed to match the original brick as closely as possibly; however, production runs vary slightly in color. Color ranges occur in each production run.

Pacific Clay's colors are produced from natural clays - color ranges are inherent in the product and should be sampled accordingly. Weights listed are averages; individual bricks may vary in dimension and weight while maintaining accordance with ASTM specifications.

The building on the front of this brochure was built using Red Flashed and Dark Iron Spot Thin Line bricks.

Pacific Clay Brick Products maintains the right to revise packaging and products inventories.

14741 Lake Street
Lake Elsinore, CA 92530
phone: 951.674.2131
fax: 951.674.6383
www.pacificclay.com

Pacific Clay Brick Products
Quality Products Since 1892

Pacific Clay PRODUCTS INC.

Thin Line

Pacific Clay PRODUCTS INC.

Our Thin Line Collection offers impeccable style and durability. Featuring the look of full brick, but with a light weight advantage, our 3/4” thin brick offers the unique styling and versatile design capabilities essential for creative projects. Thin Line is manufactured under tightly controlled processes to ensure its beauty, durability and lasting value.

Use Pacific Clay Thin Line alone or accompanied with additional product offerings such as Bullnose, Pavers and Face Brick.

Color Samples

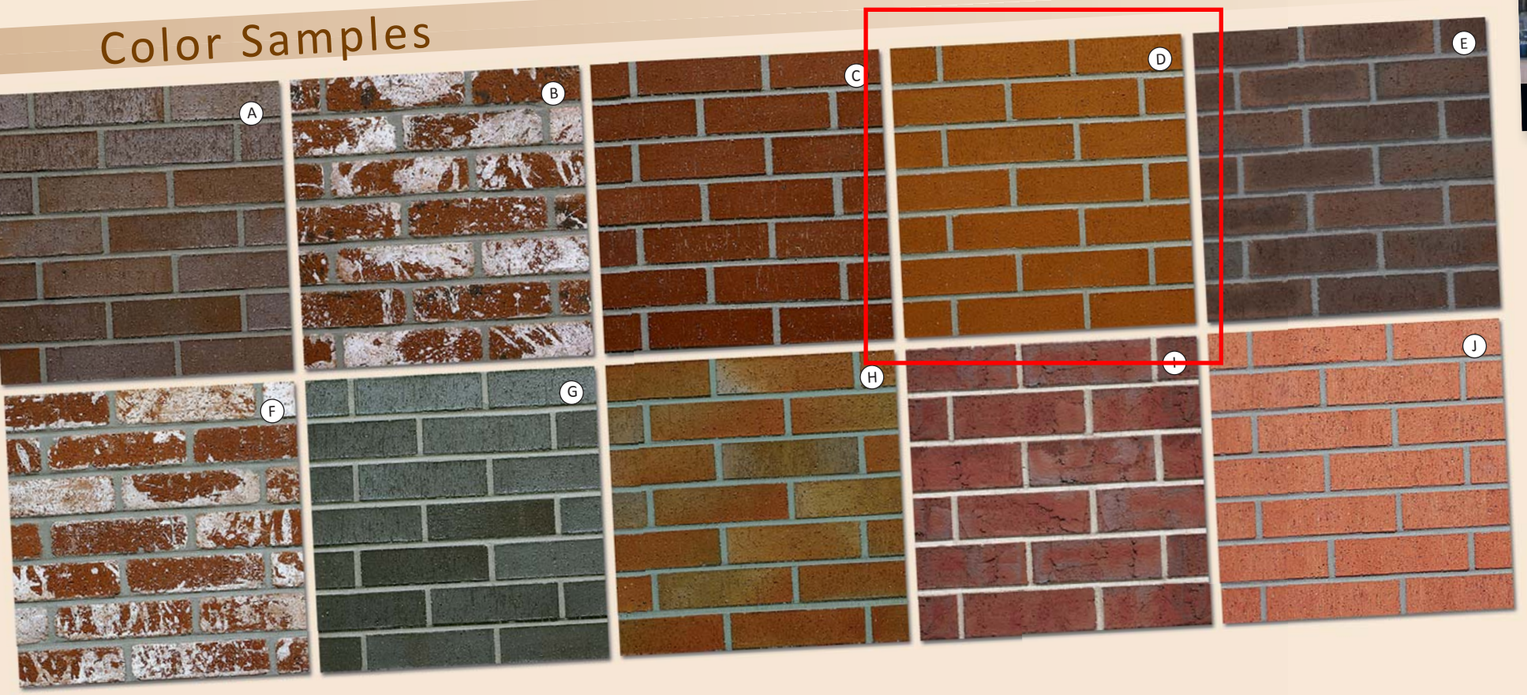

A. Medium Iron Spot*
B. Manufactured Used
C. Burgundy*
D. Sunset Red
E. Brown Flashed*
F. Manufactured White Only
G. Dark Iron Spot*
H. Red Flashed*
I. Napa*
J. Rose Tan

*Wide color variation

Shopping Center, San Luis Obispo, CA
Red Flash & Dark Iron Spot

Shopping Center, San Luis Obispo, CA
Sunset Red & Rose Tan

California State University, Los Angeles
Imperial Peach (Custom), Rose Tan & Dark Iron Spot

Quality, commitment and innovation

Glasteel, with more than 50 years of experience, is one of the largest manufacturers of Fiberglass Reinforced Panels in the North American Market supported by three state-of-the-art manufacturing plants (all ISO 9001:2008 Certified) and three strategically located distribution centers. Our mission is to offer added value products with the highest quality standards, competitive pricing and best customer service of the industry.

Glasliner FRP meets many of today's demanding applications that require high sanitation needs. These applications range from restaurants and supermarkets to restrooms and storage areas. Glasteel's process uses a special type of high strength polyester resin combined with fiberglass reinforcement to produce liner panels offering superior quality and durability. The result is a panel with a resin rich surface that is tough, strong and easy to clean.

The Best Products, Service, Price & Selection
All Under One Brand

Glasliner® FRP

Wall,Ceiling & Laminated Liner Panels

800-238-5546

www.glasteel.com

Approvals & Certifications

- **ISO 9001:2008:** All Glasteel plants are ISO 9001:2008 Certified
- **Meets USDA/FSIS requirements**
- **Canadian Food Inspection Agency (CFIA) accepted**
- **ASTM:** All Glasliner FRP liner panels are manufactured according to industry standard ASTM D-5319-2008
- **Fire Ratings:** Glasliner products are available on multiple fire ratings, such as Class C (general purpose) and Class A (fire retardant). Please contact your Glasteel representative for test results.

Typical Physical Properties for .090" Contractor Grade

Property	Test Method	Unit	Glasteel Class C General Purpose Result	Glasteel Class A Fire Retardant Result
Flexural Strength	ASTM D-790	PSI	17,000	10,000
Flexural Modulus	ASTM D-790	PSI	6.0×10^5	3.1×10^5
Tensile Strength	ASTM D-638	PSI	8,000	7,000
Tensile Modulus	ASTM D-638	PSI	9.43×10^5	3.1×10^5
% Elongation	ASTM D-638	%	1.20	1.80
Water Absorption 21°C @ 72 hrs.	ASTM D-570	%	0.17	0.72
Izod Impact Strength	ASTM D-256	ft.-lbs. /in.	7.0	7.16
Coef. of Linear Thermal Expansion	ASTM D-696	in./in. /°F	2.22×10^{-5}	2.39×10^{-5}
Barcol Hardness	ASTM D-2583	Avg.	30	35
Specific Gravity	ASTM D-792	N/A	1.6138	1.5743
Abrasion Resistance	TABER	% WT Loss	0.293	0.391
Flash Ignition Temp.	ASTM 1929	°C	430	400
Self Ignition Temp.	ASTM 1929	°C	450	430
Flame Spread	ASTM E-84	N/A	≤200	≤25
Smoke Generation	ASTM E-84	N/A	<450	<450

Storage Recommendations

- Store panels indoors in a cool, dry, well-ventilated area
- Panels should be stacked on skids not more than 5 skids high
- Do not allow moisture to collect on or in-between panels

SEE PLANS FOR LOCATION OF FRP ON INTERIOR WALLS. *NOTE: NOT ALL WALLS HAVE FRP FINISH.*

Color Selections

Bright White

Almond

Ivory

Beige

Light Gray

Silver

Black

Two Surface Finishes

Traditional pebbled finish

Premium Gel Coat

Highlighted options are available at no additional cost.

Installation Instructions

Safety:

- Use eye protection.
- Wear filter mask to cover nose and mouth, especially when cutting.
- Use manufacturer's recommended sealants and adhesives.

Tools Needed:

- Power or hand saw (fine tooth or carbide blade)
- Power or hand drill (carbide tip recommended)
- Carpenter's square
- Hammer, tape measure and level
- Adhesive and notched trowel
- Silicone sealant and caulking gun
- Vinyl moldings and 3/4" nylon fasteners

Preparation:

- It is important to store Glasliner FRP flat, on a clean, dry surface for 24 hours before installation. It is preferable to store them inside the actual area of installation or, at least, under similar climate conditions.
- Walls must be clean and free of all substances.
- Level any high or low spots on walls. Concrete block walls may require a leveling coat of plaster or other similar material.

Installation of FRP Laminated Panels, in any application, should be approved by local building code officials before panels are ordered. Glasteel cannot ensure local code compliance in any or all situations. **NOTICE:** Panels and components made of fiberglass (FRP), wood, vinyl or foam may be combustible. **DISCLAIMER and LIMITATION of Liability:** The information contained in this literature is presented in good faith, and is believed to be accurate and reliable at time of publication. No representation, guarantee or warranty is made as to the completeness, reliability or accuracy of this information. This also includes NO IMPLIED WARRANTY OR MERCHANTABILITY OR FUNCTIONAL USE FOR SPECIFIC APPLICATION.

Glasteel™

Headquarters & Distribution Centers

285 Industrial Drive
Moscow, TN 38057
800-238-5546
Fax: 901-877-1388
www.glasteel.com

2495 N.E. 36th St.
Ft. Worth, TX 76111
817-831-0505
Fax: 817-831-2001

1279 Corporate Center Dr.
Eagan, MN 55121
651-452-0150
Fax: 651-452-0376

Graham / Stabilit Canada, Inc.
104 Maple Ave
Inglewood, ON L0N1L0
905-838-2944
Fax: 905-838-3386
www.grahamfrp.com

03/12 D-SA-01 Rev.:00

M0511

COLORBODY™ PORCELAIN

CONTINENTAL SLATE™

daltile®

DESIGN WITH CONFIDENCE™

GREEN SQUARED CERTIFIED

CONTINENTAL SLATE™ | COLORBODY™ PORCELAIN

floor • wall • countertop

Field Tile

BRAZILIAN GREEN CS52

PERSIAN GOLD CS54

EGYPTIAN BEIGE CS50

ASIAN BLACK CS53

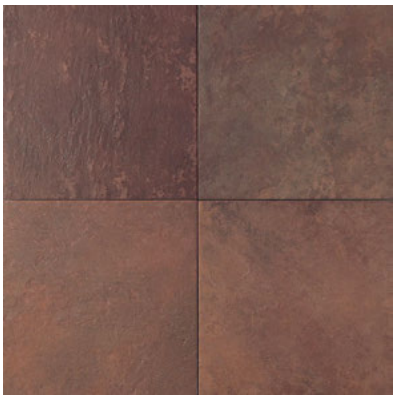

INDIAN RED CS51

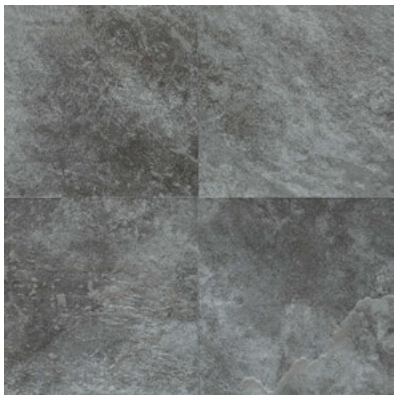

ENGLISH GREY CS57

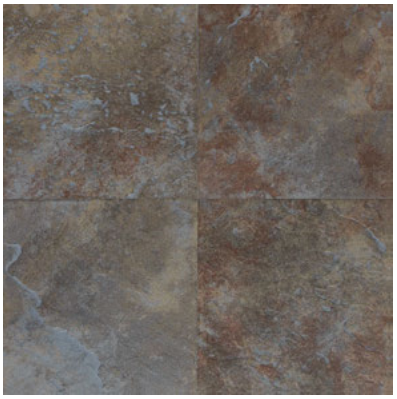

TUSCAN BLUE CS56

MOROCCAN BROWN CS55

SIZES

		SQ.FT. CARTON	PCS. PER CARTON
18 x 18 Field Tile	(17-13/16" x 17-13/16") (45.2 cm x 45.2 cm)	18.00	8
12 x 18 Field Tile	(11-13/16" x 17-13/16") (30.0 cm x 45.2 cm)	13.50	9
12 x 12 Field Tile	(11-13/16" x 11-13/16") (30.0 cm x 30.0 cm)	15.00	15
6 x 6 Field Tile	(5-13/16" x 5-13/16") (14.7 cm x 14.7 cm)	11.00	44
4 x 12 Decorative Border	(4" x 11-13/16") (10.0 cm x 30.0 cm)	--	10
3 x 3 Mosaic (Dot-mounted on a 1' x 2' sheet*)	(2-7/8" x 2-7/8") (7.5 cm x 7.5 cm)	22.00	11
Block Random (Dot-mounted on a 1' x 2' sheet*)	3 x 3 Tile (2-7/8" x 2-7/8") (7.5 cm x 7.5 cm) 1-1/2 x 3 Tile (1-3/8" x 2-7/8") (3.75 cm x 7.5 cm) 1-1/2 x 1-1/2 Tile (1-3/8" x 1-3/8") (3.75 cm x 3.75 cm)	22.00	11

*Sheet Size: 11-13/16" x 23-5/8" (30.0 cm x 60.0 cm)

RESIDENTIAL USAGE

FLOORS	WALLS	COUNTERTOPS	EXTERIOR PATIOS	EXTERIOR POOL DECKS
F	W	C	EP	ED

COMMERCIAL USAGE

	INTERIOR			EXTERIOR	
	RESIDENTIAL	LIGHT COMMERCIAL	COMMERCIAL	RESIDENTIAL	COMMERCIAL
Floors/Patios	✓	✓	✓	✓	✓
Walls/Backsplashes	✓	✓	✓	✓	✓
Countertops	✓	✓	✓	✓	✓
Pool Decking	✓	✓	✓	✓	✓
Pool Linings	✓	✓	✓	✓	✓

Suitable for freezing and non-freezing climates when proper installation methods are followed.

NOTES

Strong random shading enhances the natural beauty of this product. To achieve optimal results, tile should be selected from multiple cartons and shading arrangement planned prior to installation.

Special care should be taken when grouting with dark pigmented colors. A grout release is recommended to prevent finely powdered pigments from lodging in the pores of the surface. Use of a latex modified thin-set is recommended for installation.

Since there are variations in all fired ceramic products, tile and trim supplied for your particular installation may not match these samples. Final color selection should be made from actual tiles and trim and not from tile samples or color reproductions. Manufactured in accordance with ANSI A137.1 standards.

Water, oil, grease, etc. create slippery conditions. Floor applications with exposure to these conditions require extra caution in product selection. Not for use on ramps.

For additional information refer to "Factors to Consider" at:
www.daltile.com/CommercialFactors or www.daltile.com/ResidentialFactors.

MADE IN THE U.S.A.

EXTERIOR PRODUCT

CERTIFIED PORCELAIN TILE™ 0.5% or less water absorption

All or selected items within this series are made in the USA.
For more information visit www.daltile.com/ContinentalSlate.

TRIM

TYPE	NUMBER	SIZE	PCS. PER CARTON
Bullnose	S-43C9	3 x 12	30
Bullnose	S-4339	3 x 3	88
Cove Base*	S-36C9T	6 x 12	30
Cove Base Outcorner	SC-36C9T	1 x 6	15

*Cove Base trim is intended to coordinate with floor field tile in the standard 90-degree installation position.

SHADE VARIATION

RANDOM (V4)
Extreme color and texture variation from tile to tile and within each tile; a random look.

INSTALLATION

THICKNESS	GROUT JOINT RECOMMENDATION
5/16" (1/4" for mosaics)	3/16" (Floor), 1/16" (Wall), 1/8" (Mosaics)

DYNAMIC C.O.F. (WET) : 1 & 2

The higher the rating, the higher the slip resistance.

1	< .42
2	≥ .42

STATIC C.O.F. (WET) : 1 & 3

1	< .50
2	.50 - .59
3	≥ .60

TEST RESULTS

	ASTM#	RESULT
Water Absorption	C373	< 3.0%
Breaking Strength	C648	250 lbs
Scratch Hardness	MOHS	8.0
Chemical Resistance	C650	Resistant
Dynamic C.O.F.	A137.1	≥ 0.42
Static C.O.F.	C1028	Wet: ≥ 0.60 Dry: ≥ 0.65

Dynamic C.O.F. (Wet) value as measured by the DCOF AcuTest™ helps to assess a products suitability for a commercial environment. For more information, visit our website at www.daltile.com/DCOF.

U.S. GREEN BUILDING COUNCIL MEMBER

daltile greenworks™ ENVIRONMENTAL LEADERSHIP THAT WORKS

By their very design, Daltile products can help make it easier for you to earn LEED™ points and/or points towards many industry leading green home building programs. From using recycled material content to establishing manufacturing facilities within 500 miles of your project, we help ensure you don't have to compromise your design to be environmentally conscious. For detailed information, visit daltilegreenworks.com.

daltile®

7834 C. F. Hawn Freeway | Dallas, TX 75217 | 214.398.1411 800.933.TILE
For more information about Daltile products and services, visit our website at daltile.com

©2012 Dal-Tile Corporation (10/12) SSDTCONTSLT

QUIKSERV

we put more in – you get more out

SELF-CLOSING WINDOWS

DOUBLE SLIDERS

SCDS-6056

SEE PLANS FOR DIMENSIONS

MAXIMUM SECURITY LOCKING SYSTEM

STANDARD FEATURES

- Shipped fully-assembled and ready to install
- Warranty backed with Nationwide Service Centers
- 1/4" clear tempered safety glass
- Weather resistant and sealed to protect from the elements
- Dark bronze or clear anodized aluminum
- Corrosion resistant material: anodized aluminum and #304-#3 finish stainless steel
- Security locking systems
- Maximum security hook-bolt locks
- Automatically lock when unit is closed

OPTIONAL FEATURES

- Exterior screens
- Custom colors available
- Reduced service openings for areas requiring 432 sq. inches
- Custom transoms and overall window sizes
- Various glazing options (B/R, Insulated, Tinted, etc)
- Constructed with high visibility bullet resistant materials (Level 1)
- Widths up to 96" available

MODEL SCDS-6056

Perfect for concession stands, these self-closing, horizontal sliders meet all health code requirements. These self-closing units are mounted flush to the exterior wall. By simply releasing the window after serving the customer, the door panel closes and locks automatically. With an offset in the base, and gliding on a top-hung ball bearing system, these sliders are the smoothest windows on the market. All IFSC Models are fully glazed with 5/8" insulated glass.

Service Opening: 12-1/2"(w) x 24"(h)

Service Opening varies depending on the size of unit ordered – Custom Sizes Welcome!

MAXIMUM SECURITY LOCKING SYSTEM

Each QuikServ sliding window offers a heavy duty maximum security lock. This hook bolt lock helps to prevent outside intrusion. An easy to grasp thumb-turn allows for ease in operation while locking the unit.

AIR CURTAINS

Maxwell

Maxwell Air curtin produces a hight speed air current, dividing the inside and outside of the room into two independent temperature zones with the result that levels of interior air conditioning are maintained and the air is purified whilst energy is saved. Summer heat, winter cold, dust, insects, smoke, unpleasant odors and exhaust fumes are all kept out.

- Prevent loss of cool or warm air whilst economizing on electricity.
- Efficient dust and insect-proofing.
- Protects against the effects of smoke and noxious fumes
- Improves air circulation

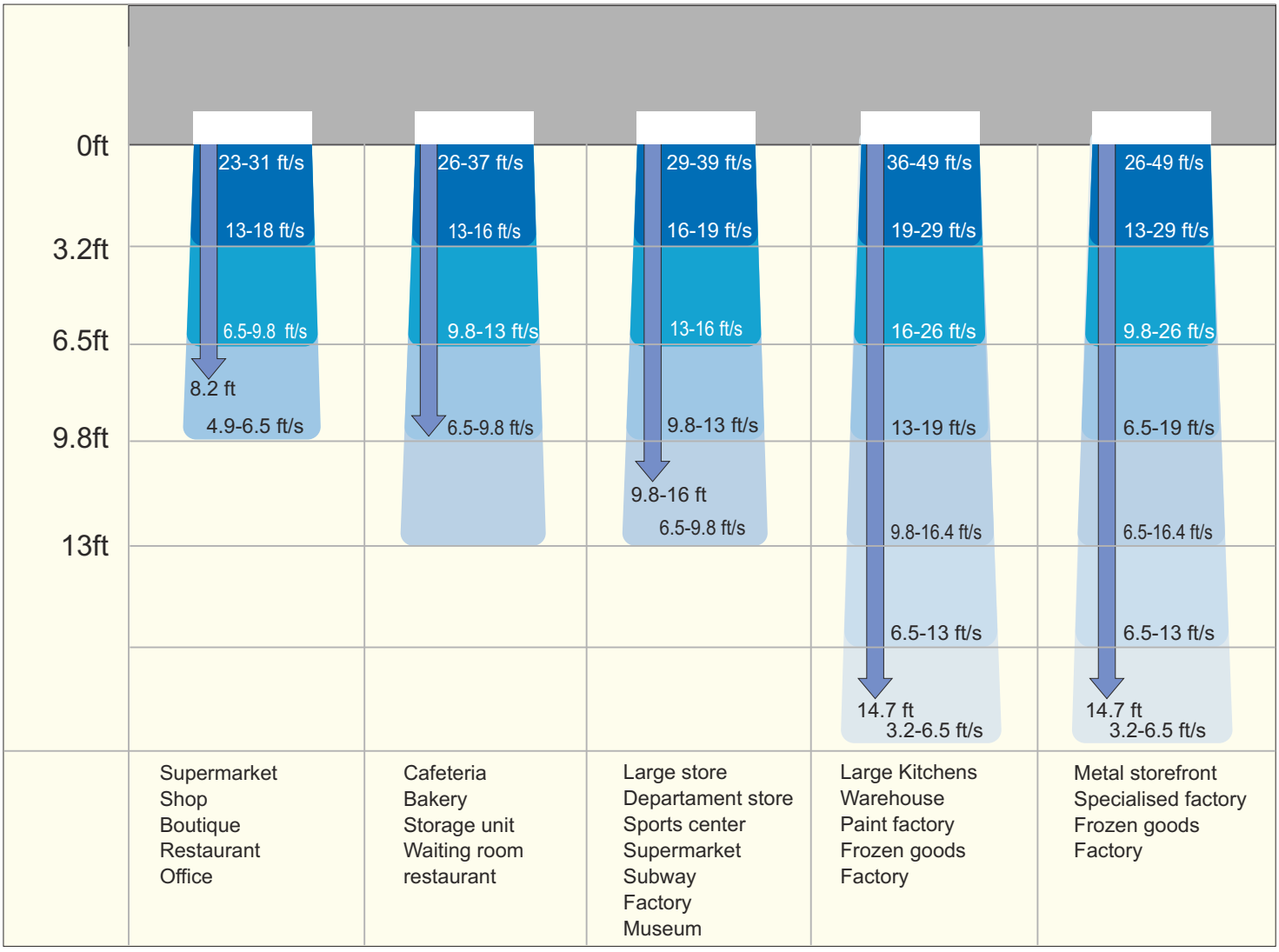

Maxwell

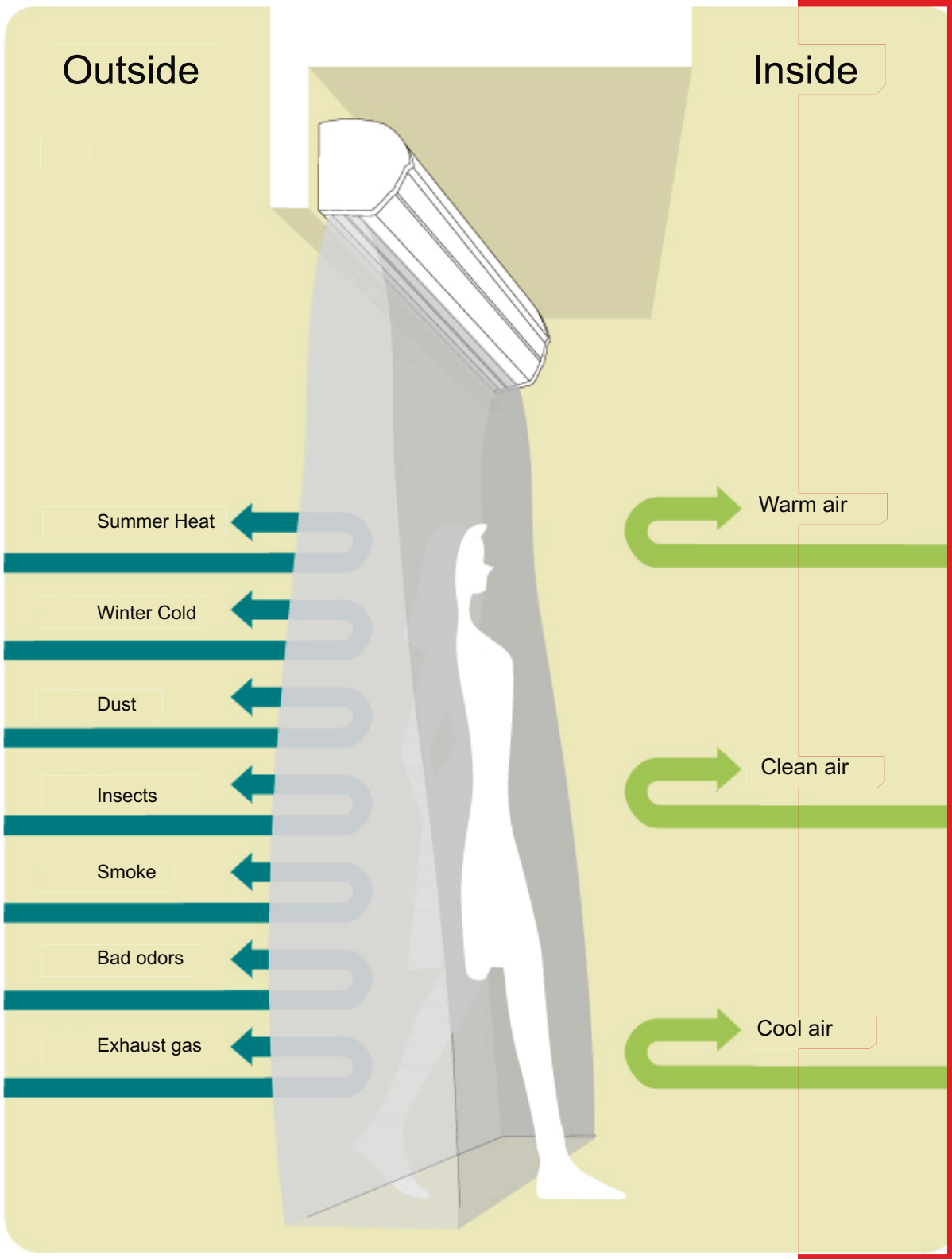
Outside
Inside
Summer Heat
Winter Cold
Dust
Insects
Smoke
Bad odors
Exhaust gas
Warm air
Clean air
Cool air

Cool Storm Series

MASF036-N1
110v/60hz

MASF048-N1
110v/60hz

MASF060-N1
110v/60hz

Adopting the highest technology in aerodynamics, all maxwell air curtains run smoothly with lowest noise level

The irregular distancing and ultra-quiet blower wheel can produce a powerful air-flow.

Easy to open, convenient design which does not use screws outside.
The stainless cover is made from high-tech aluminum and ABS of high quality.
With a uniquely designed air guide bar, it can produces wind in all directions, working well in various environments.

Detail information

Model	Dimension (in)	Frequency (Hz)	Voltage (V-)	Amperage (A)	Max input power(W) HI	Max input power(W) LO	Air volume(cfm) HI	Air volume(cfm) LO	Air velocity(ft/sec) HI	Air velocity(ft/sec) LO	Noise (dB) HI	Noise (dB) LO	Net weight (lbs)
MASF036-N1	35.4X9X9.4	60	110-120v	2.5	300	270	647	529	52	42	52	49	35.2
MASF048-N1	47.2X9X9.4	60	110-120v	3.3	400	360	882	706	52	42	53	50	39.6
MASF060-N1	59.4X9X9.4	60	110-120v	4.2	500	450	1118	882	52	42	57	52	50.7

Maxwell

ABOUT THE PRODUCT:

The SL20 and SL18 Series **Square Edge** Flush Doors are designed to meet the architectural requirements for full flush doors. Refer to Section 11 (Architectural) for specifications and the selection and usage guide of the appropriate door constructions.

This door construction combines the strength and dimensional stability of steel with the structural integrity of the laminate core. The continuous bonding of core to steel face sheets provides an attractive, flat door, free of face welding marks. Tests have proven that the construction employed has integral high resistance to impact damage, low thermal conductivity and high STC ratings.

To meet application, specification and performance requirements, the SL Series Door offers options including sizes, glass light designs and hardware preparations.

SL-Series Doors are 1-3/4″ (45mm) thick, with **Square Edges**.

INSTALLATION:

1. Installation shall conform to the published Steelcraft installation instructions, ANSI A250.11-2001 (formerly SDI 105) *Recommended Erection Instructions for Steel Frames and HMMA 840*.

2. Fire Rated Assemblies must be in accordance with NFPA Pamphlet 80. *The Authority Having Jurisdiction* is the final authority on issues related to the installation and use of installed Fire Rated Doors.

FEATURES AND BENEFITS:

Steelcraft's SL Series Doors offer the following standard features, which enhance performance and durability:

1. **Core Systems** that enhance the structural integrity of the door:
   - **Honeycomb (standard)** – 1″ (25mm) cell kraft honeycomb configuration that increases structural integrity while reducing overall weight
   - **Polystyrene (optional)** – enhanced thermal performance

2. **Full Height, Epoxy Filled Mechanical Interlock Edges** provide structural support and stability the full height of the door edges.

3. **Standard Hinge Preparations** for 4-1/2″ (114mm) x .134″ (3.3mm) standard weight or .180″ (4.7mm) heavy weight hinges.

4. **14 Gage [0.067″ (1.7mm)] Inverted Top and Bottom Channels** provide stability and protection for the top and bottom edges from abuse.

5. **Square Hinge and Lock Edges** allow for non-handed inventory control for local distribution.

6. **Recessed Dezigner™ Glass Trim** provides a clean, neat and flush finish with the door surface.

7. **Factory Applied Baked-On Rust Inhibiting Primer** paint in accordance with ANSI A250.10-1998 (R2004).

SPECIFICATION COMPLIANCE:

1. Door construction for Steelcraft SL Series doors meets the requirements of ANSI A250.8-2003 (SDI 100).

2. Hardware preparations and reinforcements are in accordance with ANSI A250.6-2003. Locations are in accordance with ANSI/DHI A115 unless otherwise stated.

FIRE RATINGS:

SL Series Doors meet the broadest fire rating requirements. They are listed for installations requiring compliance to both neutral pressure testing (ASTM E152 and UL-10B) and positive pressure standards (UBC 7-2 and UL-10C).

Rigid Honeycomb

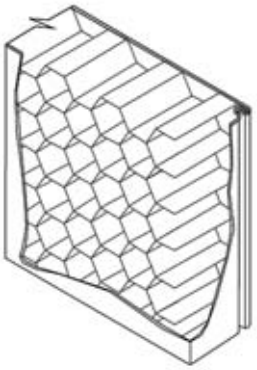

Standard Laminated Honeycomb Core
- 1″ (25mm) cell, 99 pound Kraft honeycomb
- Honeycomb surfaces sanded for maximum adhesion
- Impregnated with phenolic resin (resists mildew and vermin)
- Laminated to both face sheets with contact adhesive
- Assembled door is run through high pressure pinch rollers, achieving ultimate bond

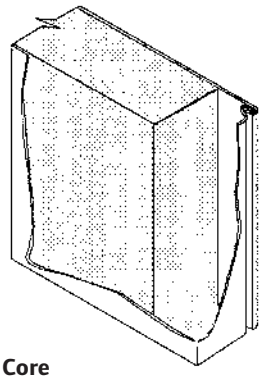

Optional Polystyrene Core
- 1 pound (453.6g) per ft^3 density slab
- Laminated to both face sheets with contact adhesive
- Labeled applications

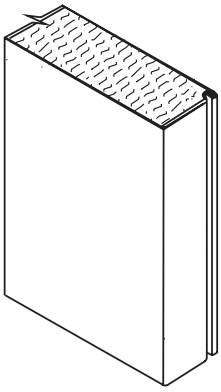

Standard Premium Edge Construction
- Beveled hinge & lock edges
- Full height mechanical interlock with epoxy adhesive
- Visible edge seam standard

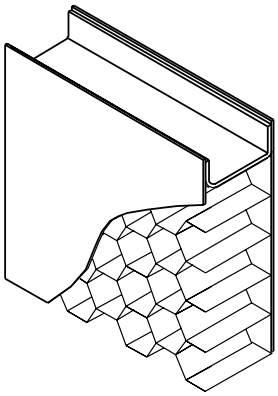

Standard Rigid 14 Gage End Channel Construction
- 14 gage inverted galvannealed top & bottom channels
- Projection welded to both face sheets
- Optional 24 gage galvannealed top caps

DOOR APPLICATION AND USAGE

Series	Steel Thickness	Opening	Usage Frequency	
SL20	20 Ga (0.8mm)	Interior - Cold Rolled Steel	Standard Duty	Light Commercial applications with minimal use and abuse
SL20	20 Ga (0.8mm)	Exterior - Galvannealled Steel		
SL18	18 Ga (1.0mm)	Interior - Cold Rolled Steel	Heavy Duty	Heavy Commercial & Institutional applications with high use
SL18	18 Ga (1.0mm)	Exterior - Galvannealled Steel		

STANDARD HARDWARE PREPARATIONS

Typical hardware applications shown. Refer to section 8 for more details.

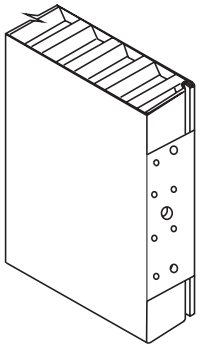

Mortise Hinge
7 Gage hinge reinforcement, reversible hinge fillers supplied

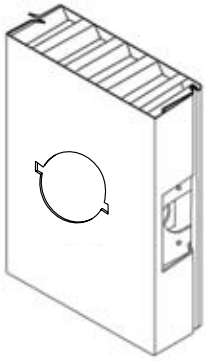

161 Lock
61L Available

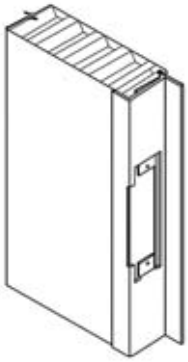

Inactive Leaf ASA Strike Prep with Astragal attached

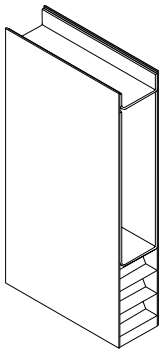

Optional 14 Gage Closer Reinforcement

Standard: mortised and reinforced for

- **Template hinge preparations** for 4-1/2″ x .134″ standard weight hinges or for 4-1/2″ x .180″ heavy weight hinges. Butt hinge preparations are cut through for non-handed function; spacer plates are furnished for field installation and handing.
- The cylindrical 161, 61L and mortise 86 lock preps are the most commonly used active leaf preparations. The 4 7/8 (124mm) strike prep is the most commonly used inactive leaf preparation.
- Optional reinforcements for surface Closers are available.
- Limited hardware applications are available.

Door Sizes and ANSI A250.8 Conversions

Steelcraft product selection for SL Series Doors has been matched to ANSI/SDI Level and Model designations.

- In accordance with ANSI A250.8, core material is not specific to the level or model designations. Core material selection is specified based on preference and application.
- Recommended minimum frame gage also applies to the frequency of operation of the opening.

Series	ANSI A250.8 - SDI 100			Edge Construction Options	Maximum Sizes		Recommended Gage of Frame
	Level	Model	Description		Single	Pair	
Level 1 - Light Commercial							
SL20	1	1	Full Flush	Visible	3'-0" x 8'-0" 914mm x 2438mm	6'-0" x 8'-0" 1829mm x 2438mm	18 Gage [0.042" (1.0mm)] 16 Gage [0.053" (1.3mm)]
Level 2 - Heavy Duty Commercial & Institutional							
SL18	2	1	Full Flush	Visible	4'-0" x 8'-0" 1219mm x 2438mm	8'-0" x 8'-0" 2438mm x 2438mm	16 Gage [0.053" (1.3mm)]

DOOR EDGE CONSTRUCTION:

Optional Edge Seams available in the SL Series doors:

- SL - Standard feature includes visible edge seams with full height interlocked edges.

Standard Visible Seam

SL Series Visible Seam Features

- Full height mechanical interlock
- Interlock filled with epoxy adhesive
- Visible edge seam

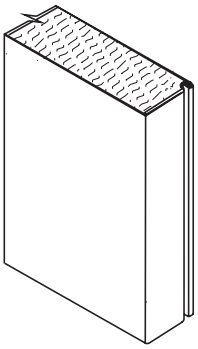

HAGER COMPANIES
One Family. One Brand. One Vision.™

ECBB1101NRP

Product Information

Description:
- ANSI A2112 (Brass)
- ANSI A5112 (Stainless steel)
- Two ball bearings
- Non-removable pin with button tip and plug
- Only available in 4 -1/2" x 4-1/2" (114 mm x 114 mm)
- Fasteners are AMS x 1/2 WS
- For use on medium weight doors or doors requiring medium frequency service

Five Knuckle
Ball Bearing
Standard Weight

Product Specifications

Fasteners: - All machine and half wood

Material:
- Brass w/ Stainless Steel pin ANSI A2112
- Stainless Steel with Stainless Steel pin ANSI A5112

Finishes: - US15, US26, US26D, US32D

HAGER COMPANIES
One Family. One Brand. One Vision.™

5200 Series

Product Information

Notes:
- Full rack and pinion operation
- Precision machined, heat treated steel piston
- Triple heat treated steel spindle

Grade 1 Heavy Duty
Door Closer

Product Specifications

Size:	- 1-6 adjustable
Certifications:	- BHMA Certified ANSI A156.4, adjustable sizes 2 to 5 - Standard - ADA Compliant ANSI A117.1 Accessibility Code - UL/cUL Listed for up to 3 hours - UL10C Positive Pressure Rated - UL10B Neutral Pressure Rated
Material:	- Aluminum alloy
Cover:	- Full plastic cover - Standard - Slim line plastic cover - Optional - Full size plated metal cover - Optional
Springs:	- Double heat treated steel, tempered springs - Precision machined, heat treated Steel piston - Triple heat treated Steel spindle
Valves:	- Adjustable latching and sweep speed valve - Adjustable backcheck valve - Standard - Delayed action valve - Optional
Handing:	- Non-Handed
Arms & Brackets:	- Tri-Pack - Regular, parallel arm, and top jamb mount - Standard - 15% power adjustment in standard arm for regular and top jamb mount
Optional Arms:	- Hold Open Arm - Extra Heavy Duty Hold Open Stop Arm - Extra Heavy Duty Stop Arm - Extra Heavy Duty Arm - Extra Heavy Duty Hold Open Arm - Extra Heavy Duty Cushion Stop Arm - Extra Heavy Duty Hold Open Cushion Stop Arm
Fasteners:	- Self-reaming, self-tapping wood and machine screws - Sex nuts and bolts
Door Thickness:	- 1-3/4" (44 mm) - 1-3/8" - 2-1/4" (36 mm - 57 mm) - Optional
Finishes:	- ALM, BRZ, DBZ, GOL, US3, US26, US26D - Rust inhibiting primer - Standard

member BHMA · BHMA CERTIFIED · LIFETIME WARRANTY · c UL us LISTED

PEMKO

ASSA ABLOY

COMMERCIAL THRESHOLDS: SADDLE THRESHOLDS

170_

AVAILABLE FINISHES: **A, B, BDG, D, G**
WIDTH: **4" (101.6 mm)**
HEIGHT: **1/2" (12.7 mm)**

TITLE:	
PREPARED FOR:	
PREPARED BY:	
DATE:	
COMMENTS:	

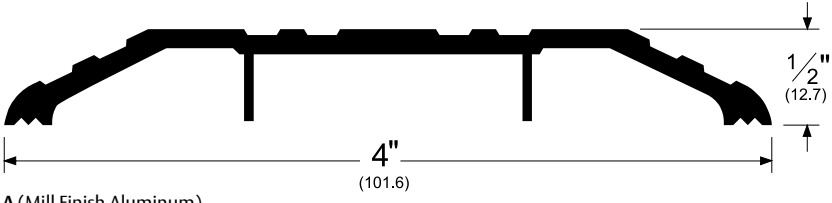

A (Mill Finish Aluminum)
B (Mill Finish Extruded Bronze [Brass])
BDG (Bright Dip Gold Anodized)
D (Dark Bronze Anodized)
G (Gold Anodized)

Copyright © 2008 Pemko Manufacturing Co. All rights reserved.
Reproduction in whole or in part without the express written permission of Pemko Manufacturing Co. is prohibited.

PEMKO

ASSA ABLOY

DOOR BOTTOMS: DOOR BOTTOM SWEEPS

315_N

AVAILABLE FINISHES: **B, C, D, G, SN**

WIDTH: **1/4" (6.4 mm)**

PROFILE HEIGHT: **1-1/4" (31.8 mm)**
TOTAL HEIGHT WITH INSERT: **1-11/16" (42.9 mm)**

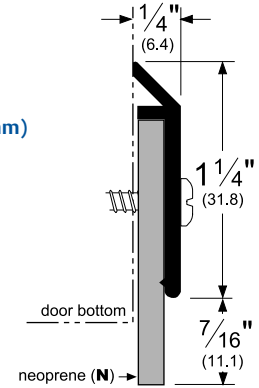

TITLE:	
PREPARED FOR:	
PREPARED BY:	
DATE:	
COMMENTS:	

B (Mill Finish Extruded Bronze [Brass])
C (Clear Anodized Aluminum)
D (Dark Bronze Anodized Aluminum)
G (Gold Anodized Aluminum)
SN (Satin Nickel Anodized Aluminum)

Copyright © 2008 Pemko Manufacturing Co. All rights reserved.
Reproduction in whole or in part without the express written permission of Pemko Manufacturing Co. is prohibited.

TECHNICAL DATA

FROM

Anemostat®

DOOR PRODUCTS

A MESTEK COMPANY

P.O. BOX 4938 • 1220 WATSONCENTER ROAD
CARSON, CA 90745-4206
(310) 835-7500 • FAX (310) 835-0448
e-mail: door@anemostat.com • website: www.anemostat.com

AFDL

INVERTED Y
NON-VISION LOUVER

AFDL-T

TRANSOM LOUVER
CORE ONLY

NOT FIRE RATED

DETAIL DRAWING

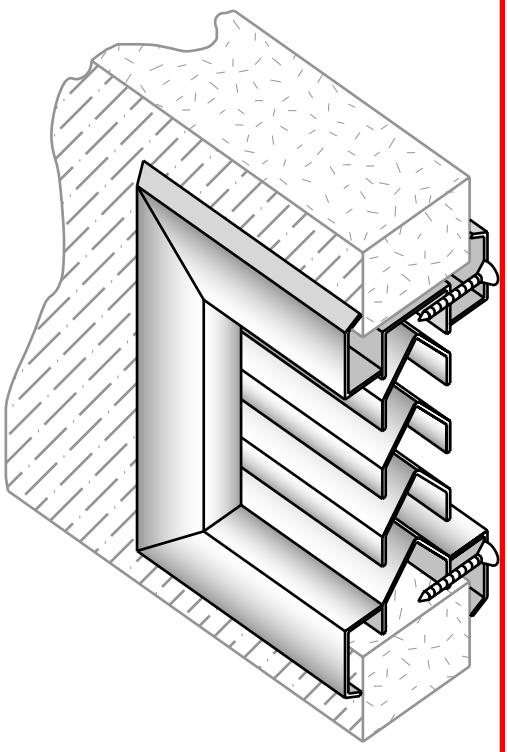

Anemostat manufacturing dimensions ±1/32 (1mm)
Actual dimensions are nominal and may vary
based on component manufacturers tolerances.

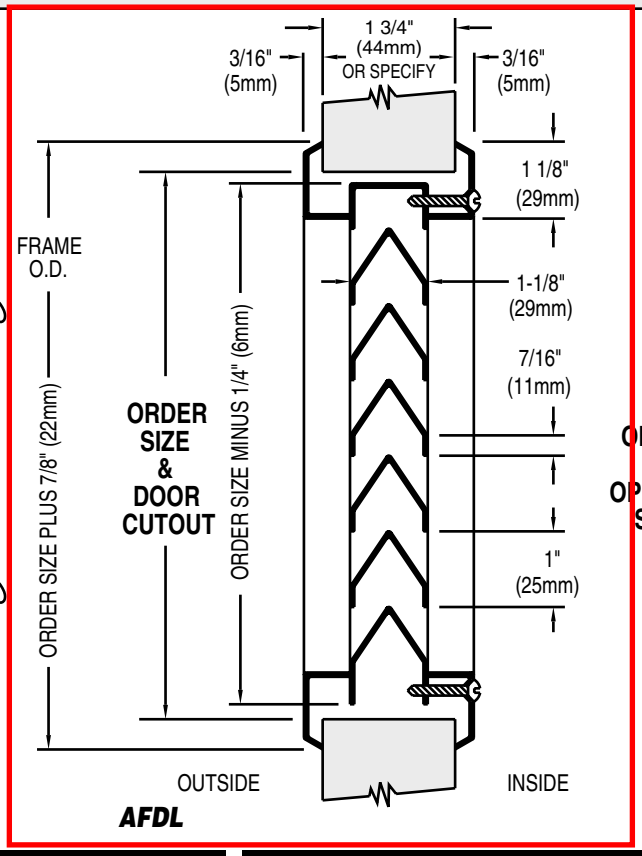

FOR USE IN TRANSOMS
SIDELITES OR BORROWED LITES.

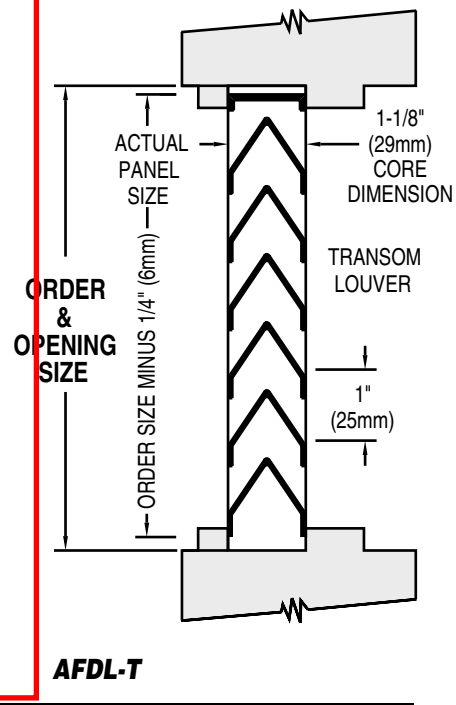

STANDARD PRODUCT FEATURES

- **MATERIAL:** 18 GA. (1.2mm) Cold Rolled Steel - Frame.
  22 GA. (.75mm) Cold Rolled Steel - Louver Blades.
- **FINISH:** Grey Primer, Beige or Bronze Baked Enamel.
- **INSTALLATION:** Our top selling louver is preferred because of its ease of installation. Use #8x1" (25mm) phillips screw that fastens auxiliary frame to the louver core, thru the cutout in the door, thus eliminating the need to drill holes in the door for thru bolts. This method saves time and installation labor and leaves the corridor side of the frame free of fasteners for added security, and a cleaner aesthetic appearance.
- **DOOR THICKNESS:** For 1 3/4" (44mm) Door 1-3/8"(35mm), 2" (50mm) and 2 1/8" (54mm) are available. Louver core may be offset.
- **AESTHETICS:** Tight mitered corners, no visible welds, countersunk mounting holes and corridor side of frame free of fasteners make for a clean, streamlined appearance
- **USES:** Anywhere air flow is required thru a door.
- **FREE AIR FLOW:** 50% Free Area.

OPTIONAL FEATURES

- **MATERIAL:** #304 or #316 Stainless Steel, #4 Finish(Satin), Galvanized (Coil, Hot Dipped or Zinc Plated), Mill Finish or Anodized Aluminum (#5052 Alloy), 16 gauge (1.5mm) Cold Rolled Steel or Stainless Steel.
- **FINISH:** Custom Baked Enamel Colors (as per sample paint chip, supplied by customer).
- **FASTENERS:** Special Security Screw Fasteners, See Page 14, this section.
- **SPECIALS:** Fractional sizes (frame dimension is increased to accomodate odd size).
  Mesh insect screens are loose, attached or framed.
  (Galvanized, Aluminum, Charcoal Aluminum, Stainless Steel.)
  For detail drawings see pages 12 and 13 this section.

FIRE RATINGS

- **AFDL and AFDL-T are not fire rated.**

- ***NOTE:*** For Exterior use, High Humidity or Salt Air application, product must be Galvanized or Stainless Steel.

Job Name & Location	Submitted by

HAGER COMPANIES
One Family. One Brand. One Vision.™

3500 Series Lever

Product Information

Applications:
- Standard duty commercial
- No exposed mounting screws
- Non-handed
- Conventional cylinder or Small Format Interchangeable Core housing available

Notes:
- Blank plate projection is 13/16" (21 mm) for Functions 25 and 79
- Interchangeable Cores are not available on Apollo knob

Grade 2 Cylindrical Lever

Product Specifications

Certifications: - BHMA Certified ANSI A156.2, Series 4000, Grade 2 - ADA Compliant ANSI A117.1 Accessibility Code - UL/cUL Listed for all functions up to 3 hours "A" label single doors - ANSI A250.13 Severe Windstorm Component - UL10C Positive Pressure Rated - UL10B Neutral Pressure Rated - Lifetime warranty

Exposed Trim: - Knobs: wrought brass or stainless steel - Levers: cast zinc - Rose: wrought brass or stainless steel

Lock Chassis: - Heavy gauge steel, zinc dichromated for corrosion resistance - Free wheeling (levers only) - Removable thru -bolts - Failure to install thru -bolts and removable screw posts voids BHMA certification, UL Rating, and Warranty.

Rose Diameter: - 3-11/32" (85 mm) levers; 3" (76 mm) knobs

Keys: - Two operating keys supplied per lock

Cylinders: - Brass - Keyed Different - C Keyway - Other keying options, including keyed 6 -pin, available from the factory - Interchangeable Core - Brass 6 & 7 pin - Uncombinated & Combinated - Drilled 6-pin, Keyed 5 -pin - Standard - Small Format Interchangeable Core housing available - SFIC uncombinated or combinated, brass 6 - or 7-pin sold separately

Door Thickness: - Levers: 1 -3/8" - 2" (35 mm - 51 mm) - Knobs: 1 -3/8" - 1-3/4" (35 mm - 54 mm)

Backset: - 2-3/4" (70 mm) - Standard - 2-3/8" (60 mm) - Optional - 3-3/4" (94 mm) - Optional - 5" (128 mm) - Optional

Latchbolt: - 1/2" (13 mm) Throw - Stainless steel - 1-1/8" x 2-1/4" (25 mm x 57 mm) Faceplate for 2 -3/4" (70 mm) backset - Deadlocking latchbolt prevents manipulation when door is closed; keyed functions only - 1" x 2-1/4" (25 mm x 57 mm) Faceplate for 2 -3/8" (60 mm) backset

Strikes: - 3935 ASA 1-1/4" x 4-7/8" (32 mm x 124 mm) strike - Standard

Functions:
- 50 Office
- 53 Entry
- 70 Classroom
- 73 Corridor
- 79 Keyed Communicating
- 80 Storeroom
- 10 Passage
- 40 Privacy
- 25 Exit Only
- 17 Dummy
- 27 Back-to-Back Dummy

Finishes: - US3, US4, US10, US10B, US26, US26D (Levers only) - US3, US32D (Knobs only)

Options: - Lead Lined (Levers Only) - Tactile Knurling (Levers Only) - Split Finish - Additional latchbolts and strikes available

Standard door prep: - 2-1/8" diameter (cross bore) - Latch hole: 1" diameter (edge bore)

Lever options: - Apollo knob; Archer, August, Withnell levers

HAGER COMPANIES
One Family. One Brand. One Vision.™

2942

Product Information

Magnetic Lock:
- ANSI/BHMA A156.23 Grade 1, Compliant
- Designed for system integrators, distributors, installers, and building owners presently using low cost import or private label brand access control hardware
- Easy to install
- Provides superior, less obtrusive appearance compared to stainless steel epoxy sealed magnetic locks
- full monitoring standard
- Quick mount assembly reduces installation time

Use:
- For perimeter and interior door security and access control

Magnet Locks

Product Specifications

Holding Force:
- 1200 lbs (545 kg)

Includes:
- Door and lock status outputs for remote monitoring and system application needs

Lock:
- 10-1/2" (l) x 2 -7/8" (h) x 1 -5/8" (d)
- 266 (l) x 73 (h) x 41 (d) mm

Armature:
- 7-5/16" (l) x 2 -3/8" (h) x 1/2" (d)
- 186 (l) x 38 (h) x 13 (d) mm

Standard Features:
- Door status, lock status and bi -color LED
- Interlocking quick mount assembly
- Adjustable mounting bracket with choice of self -drilling and tapping mounting screws or machine screws
- Wire access chamber with terminal block
- Dual voltage f12/24 VDC
- Clear anodized aluminum

Circutry/Wiring:
- PC board with voltage and current spike protection, instant release anti -residual magnetism circuit, terminal block for power input and status outputs

Voltage:
- 12/24 VDC, field selectable

Lock Status:
- SPDT, 2 amp @ 30 VDC

Door Status:
- SPDT, 250 mA @ 30 VDC

Accessories:
- 2-679-0100 Top jamb kit
- 2-679-0102 Glass Door Kit
- 2-679-0104 Adjustable Angle Bracket
- 2-679-0106 - Angle Bracket (cut to fit 2941)
- 2-679-0107 - Stop Filler Plate (field cut for 2941)
- 2-679-0108 - Stop Filler Plate (field cut for 2941)

UL LISTED

HAGER COMPANIES
One Family. One Brand. One Vision.™

2903

Product Information

Description: - Provides power for Fail Safe or Fail Secure locking devices and interface with building alarm controls, card readers, keypads, and other door controls.
- * Not suitable for use with Electric Latch Retraction exit devices

Product Specifications

Certifications: - UL Listed

Features:
- Filtered and regulated 24 VDC constant voltage
- 2 AMP load capacity
- Over voltage/short circuit protection
- Overload protection
- Surge suppression for locking devices
- Interface relay
- Adjustable time delay feature

HAGER COMPANIES
One Family. One Brand. One Vision.™

2977

Product Information

Description:
- Request to exit switch
- Heavy duty vandal resistant and weatherized
- No moving parts
- Bi-color status illumination
- Designed for indoor, outdoor, commercial, and industrial egress applications
- Constructed of stainless steel and utilizing piezoelectric technology
- Ideal for harsh or high traffic conditions
- Weather resistant
- Ensures superior performance in virtually any environment
- Switch features integrated output timer adjustable for 1 -30 seconds
- Red and green can be selected to show relay ON or OFF status
- Can be used to control an automatic door, electromechanical lock, strike, or magnetic lock
- May be tied into the remote bypass (Request to Exit) input of an access control system
- Can be used to shunt an alarm system to allow egress from a secure area

Exit Switch

Product Specifications

Features:
- Vandal resistant stainless steel piezoelectric button
- 3/32" (2 mm) stainless steel vandal resistant faceplate
- Selectable bi -color illumination status (Relay OFF - red, green, or none) (Relay ON - red, green, or none)
- Adjustable timer output, 1 -30 seconds

Models:
- 2977 - 1 Gang

Input Voltage:
- 12/24 AC/DC

Current:
- Idle - 30 mA
- Active - 60 mA

Output:
- SPDT dry contact, 3 amp @ 30 VDC

Button Switch:
- 1 billion cycle life expectancy

Relay:
- 100,000 cycles @ 3 A 30 VDC life expectancy
- 200,000 cycles @ 1.5 A 30 VDC life expectancy

Switch:
- Operating environment of -40 degrees F to 160 degrees F (-40C to 70C)

Dimensions:
- 4-3/4" (h) x 3" (w) x 1 -1/8" (d)
- 121 (h) x 76 (w) x 29 (d) mm

2-679-0611 | 2-679-0612

Product Information

Description: - 2-679-0611 (white PIR egress sensor)
- 2-679-0612 (black PIR egress sensor)

PIR Egress Sensor

Product Specifications

Input: - 12 or 24 VAC/DC @ 26 mA max

Contact: - 2 SPDT dry, 2 amp @ 30VDC

Operating Temp: - 20 degree F to 120 degree F (-29 degrees C to 49 degrees C)

Dimensions: - 1-1/2 (h) x 6 -1/4 (w) x 1 -1/2 (d) in -38 (h) x 149 (w) x 38 (d) mm
- Lifetime on hardware components

Voltage: - UL Listed 294
- Access control system unit
- Unlocks doors automatically when persons approaching door are detected
- Complies with national fire and building code requirements for access controlled egress doors
- Code compliant Fail Safe mode releases locks when power to PIR sensor is interrupted

400U-L2
400U-LT2

400-SN
400-RMB

Audible and Visual Annunciators

Stainless steel single gang or narrow frame mount annunciator assemblies. Dual voltage 12/24VDC.

400U-L2 One red and one green LED, 1 gang

400U-LT1 One tri-color LED, illuminates red, green and yellow, 1 gang

400U-LT2 Two tri-color LED's, illuminates red, green and yellow, 1 gang

400U-RMB Buzzer, 1 gang, specify 12VDC or 24VDC

400NU-RMB Buzzer, narrow 1.75 " wide, specify 12VDC or 24VDC

400U-SN 85 dB siren, 1 gang 3-8VDC, 18mA

400NU-SN 85 dB siren, narrow 1.75 " wide 3-28VDC, 18mA

CB401-AU
CB402-AU

CB401-B
CB402-B

Communicating Bathroom Systems Controls

For a common single bathroom shared by two patient rooms or dormitory rooms, the CB400A controls provides privacy and ensures that both doors are locked only when the bathroom is occupied and unlocked when the bathroom is not occupied. The CB400B controls provide emergency access by facility staff. Both doors unlock when signalled by the fire life safety system.

For communicating bathroom systems with EMLocks

CB401-AU The CB401-AU is located inside the bathroom. Depressing the button locks both doors for privacy. Pressing the button again unlocks both doors ensuring both doors are unlocked when unoccupied.

CB401-B The CB401-B emergency door release (2 required) is located outside the bathroom above or adjacent to the door. The illuminated push switch lens indicates the doors are locked. Depressing the push switch unlocks both doors.

Additional system requirements: Two SDC EMLocks 1581-DPS 650lbs holding force or 1571-DPS 1200lbs holding force; 631RF CR access control power supply with fire alarm release input.

For communicating bathroom systems with Hi/Tower® electrified locksets

CB402-AU The CB402-A is located inside the bathroom. Depressing the push switch locks both doors on the outside only. Doors are always unlocked on the inside for uninhibited egress. Exiting either door causes both doors to unlock.

CB402-B CB402-B emergency door release (2 required) is located outside the bathroom above or adjacent to the door. The illuminated push switch lens indicates the doors are locked. Depressing the push switch unlocks both doors.

Additional system requirements: Two SDC HiTower® locksets Z7250-REX or Z7850-DS ; 631RF LR access control power supply with fire alarm release input. Power transfer hinge loop required with Z7850-DS and Z7250-REX.

10TD

14-2

Timers

10TD Mini Timer

The SDC 10TD is a field adjustable 1-60 second miniature time delay relay designed for timed unlocking of electric locks. The 10TD Mini Timer is small enough to fit in a single gang box or inside the door frame.

Contact: SPDT dry, 2 Amps @ 30VDC

Voltage: 12/24V AC/DC @ 50mA

Trigger Input: N.O. (normally open)

Dimensions: 2.25"H x 1.5"W x 0.75"D (57.2 x 38.1 x 19.1mm)

14-2 Seven Day, Skip-A-Day Timer

The SDC 14-2 is a compact, field programmable, 7 day skip-a-day timer module recommended for automatic timed locking and unlocking of one door or all doors on the same circuit. The timer may be programmed to skip unlocking on selected days or weekends. The timer may also be installed in a power supply

Contact: SPDT dry, 16 Amps @ 30VDC

Voltage: 12V AC/DC or 24V AC/DC please specify

Dimensions: 2.375"H x 2.375"W x 1.25"D (60.3 x 60.3 x 32mm)

Rolling CounterDoor Systems

SERIES

650
651
652

OVERHEAD DOOR®

INDUSTRY LEADING
COMMERCIAL & INDUSTRIAL SOLUTIONS

Technical Data

Application	Commercial, retail, corporate and professional environments. These doors are ideal for a host of small-opening applications where security is important. Common applications include concession areas, cafeterias, pharmacies, parts-storage areas, and ticket windows.
Mounting position	Face of wall, between jambs
Operation	Standard: Manual push up; Optional: Crank, Electric
Warranty	24-month limited

Curtain

Max. standard width	20' (6096 mm)
Max. standard height	9' (2743 mm)
Slats	Interlocking flat profile slats with endlocks. Slat profile type F-128, fabricated of galvanized steel (650 Series); stainless steel (651 Series); aluminum (652 Series)
Finish	650 Series: galvanized steel primed with choice of baked-on polyester top coat in gray or tan 651 Series: No. 4 finished stainless steel 652 Series: Aluminum, clear anodized; Option: bronze anodized; Option: powder-coat paint finish in 197 standard colors, or color-matched to specification

Other

Guides	Standard: extruded aluminum Option: 11-gauge roll-formed steel guides (650/652 Series); stainless steel guides (651 Series)
Counterbalance	Helical torsion springs housed in a steel tube or pipe barrel
Brackets	Steel plate to support curtain, counterbalance, and hood
Hood	650 Series: galvanized steel; 651 Series: stainless steel; 652 Series: aluminum
Locking	Standard: Interior slide bolt Optional: cylinder lock

Slat Data

F128 Slat

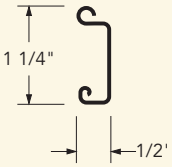

Series	Slat	Opening Width	Standard
650	F128	Thru 20'0" (6096 mm)	22 ga.
651	F128	Thru 20'0" (6096 mm)	22 ga. ss
652	F128	Thru 20'0" (6096 mm)	aluminum

The 650, 651 and 652 S

When your project requires a high-quality, non-rated counter door system that's as handsome as it is dependable, the 650/651/652 Series will meet your specifications and exceed all expectations. These precision-manufactured rolling counter doors feature a metal curtain in your choice of three finishes — and plenty more options that allow customization to your specific application. Designed to fit openings up to 20' wide by 9' high (6096 mm by 2743 mm), these durable doors can withstand heavy usage or industrial environments, such as stadium concession areas and parts-storage areas. They are also stylish enough for a variety of interior uses, including cafeterias, pharmacies and retail settings.

The Choice of Steel, Stainless or Aluminum.
The 650/651/652 Series curtains are fabricated from 22-gauge galvanized steel (650 Series), 22-gauge stainless steel (651 Series) or aluminum (652 Series) for handsomeness that holds up in nearly any environment. Galvanized steel curtains are factory pre-finished with a baked-on primer and polyester coat to enhance finish durability and minimize field painting. Guides are fabricated of extruded aluminum with continuous silicon-treated strips standard. The option of 11-gauge roll-formed steel guides is offered on 650 and 652 Series doors, and stainless steel guides are available for the 651 Series.

eries. A Solid and Stylish Selection in Steel, Stainless or Aluminum.

Door Selection Guide

	Curtain	Slat	Finish	Hood	Guides	Bottom Bar
Series 650	Galv. Steel	F-128	Gray or Tan	Galv. Steel	Aluminum/ Primed Steel	Primed Steel
Series 651	Stainless	F-128	#4	Stainless	Aluminum/ Stainless	Stainless
Series 652	Aluminum	F-128	Clear Anodized	Aluminum	Stainless	Aluminum

Factory Pre-Finished for Longer Life.

Durable good looks are the hallmark of the 650/651/652 Series. The galvanized steel curtain featured on the 650 Series is factory pre-finished with a baked-on primer and polyester coat to enhance finish durability and minimize field painting. The standard polyester top coat is available in gray or tan. Powder coat finish is available in choice of 197 standard colors. Color may also be matched to architect's specification to best compliment the look of the facility.

The 651 Series features a stainless steel curtain with a standard No. 4 finish. The aluminum slats of the 652 Series come standard with clear anodized finish. A bronze anodized finish is optional.

High-Performance, Low Maintenance.

The 650/651/652 Series doors are constructed of high-quality interlocking flat slats for a tight fit that is both sleek and attractive. Endlocks secured to alternate slats maintain curtain alignment and prevent lateral slat movement. The counter balance assembly features heavy-duty helical torsion springs in a steel tube or pipe barrel to provide long and reliable service. Optional crank or electric operation further simplifies door operation, and 24 month warranty — as well as our network of Red Ribbon distributors — ensures that your counter doors will perform like new for years to come.

For additional information, or special project requirements, consult your Overhead Door Distributor or the Overhead Door Architectural Design Manual at http://www.overheaddoor.com/ADM/base.html

The Original, Innovative Choice for Unequalled Quality and Service

Overhead Door Corporation pioneered the upward-acting door industry, inventing the first upward-acting door in 1921 and the first electric door operator in 1926. Today, we continue to be the industry leader through the strength of our product innovation, superior craftsmanship and outstanding customer support, underscoring a legacy of quality, expertise and integrity. That's why design and construction professionals specify Overhead Door Corporation products more often than any other brand.

The Overhead Door Red Ribbon is a mark of quality that also reflects the pride we take in the people who support our products. Our family of over 400 Red Ribbon Distributors across the country not only share our name and logo, but also our commitment to excellence. Your Red Ribbon Distributor will work with you in a consultative role to ensure that product selections achieve your design and application requirements — in addition to offering expert installation, professional field service and ongoing maintenance. From project design and manufacturing to installation and service, the Overhead Door Red Ribbon is your guarantee of genuine quality and turnkey service excellence.

Together with our Red Ribbon Distributors, we offer comprehensive technical information and resource materials to support your project, including:

- **Architectural Design Manual – a comprehensive guide to selecting, specifying and detailing all commercial and industrial Overhead Door products can be found at www.OverheadDoor.com/ADM/base.html**
- **Operation & Maintenance Manual – detailed product information, customized for your project, to ensure reliable, long-life door system operation**
- **Custom application and technical assistance through ordering plants' customer service and technical services respectively**
- **Visit our Architect's Corner at www.OverheadDoor.com/architects corner**

Advanced Rolling Steel Door RapidSlat®

Thermacore® Sectional Doors

Rolling & Side Folding Security Grilles & Closures

Rolling Service Doors

Commercial Operators

Today, Overhead Door Corporation – along with our Horton Automatics division, for automated pedestrian entrances – is recognized as the leading, single-source manufacturer of integrated door and operator systems for commercial, industrial and residential applications. With multiple manufacturing locations throughout the United States, a state-of-the-art TREQ (Testing, Reliability, Engineering, and Quality) Center for design and engineering, and a national network of authorized Red Ribbon Distributors, our capabilities are leading-edge and our field service and technical support second to none. Built best and backed best, Overhead Door is the industry's leading choice for quality that shows and lasts.

To talk with the Overhead Door Red Ribbon Distributor nearest you, call 1-800-929-DOOR.

Overhead Door Corporation
2501 S. State Hwy. 121 Bus., Suite 200
Lewisville, Texas 75067
1-800-929-DOOR
www.OverheadDoor.com
©2012 Overhead Door Corporation
Form #: C900-195 1M 5/12 JAR

OVERHEAD DOOR®

INDUSTRY LEADING
COMMERCIAL & INDUSTRIAL SOLUTIONS

The Overhead Door Corporation family of quality commercial and industrial products includes:

The Genuine. The Original. OVERHEAD DOOR

Horton

A part of Sanwa Shutter Corporation

Consistent with our policy of continuing product improvement, we reserve the right to change product specifications without notice or obligation

5.03.3 FIXTURES

Data sheets to follow.

Dura-Ware® 2110 Series

Blowout Jet Toilet - On Floor

2110-W-2

Fixture May Show Some Available Options

Please visit ***www.acorneng.com*** for most current specifications.

Blowout Jet Toilet - On Floor

Fixture is arranged to be installed on finished wall from the front side. Unit is fabricated from 16 gage, type 304 stainless steel and is seamless welded construction. Exterior has a satin finish with an integral contoured seat. The inside of the toilet bowl also has a satin finish. Wall flange is reinforced for maximum strength.

Toilet is Blowout Jet type with elongated bowl manufactured to comply with ASME A112.19.3-2008 and CSA B45.4-2008 standards. Toilet requires a minimum of 25 PSI flow pressure and uses a minimum water consumption of 1.28 GPF. Trap has a minimum 3-1/2" seal, will pass a 2-1/8" ball and is fully enclosed. Toilet has a 1-1/2” NPT flushing inlet connection and a gasketed waste outlet.

Flush Valve supply is additionally available for exposed or concealed flush valve styles in 1.28 GPF, 1.6 GPF or 3.5 GPF with 1-1/2” NPT connection.

GUIDE SPECIFICATION

Provide and install Acorn Dura-Ware Blowout Jet Toilet (specify model number and options). Fixture shall be fabricated from 16 gage, type 304 stainless steel. Construction shall be seamless welded and exposed surfaces shall have a satin finish with an integral contoured toilet seat. Toilet shall be concealed blowout jet type with an elongated bowl and a self-draining flushing rim. Toilet shall be ASME A112.19.3-2008 and CSA B45.4-2008 compliant. Toilet requires a minimum of 25 PSI flow pressure and uses a minimum water consumption of 1.28 GPF. Toilet trap shall have a minimum 3-1/2" seal that shall pass a 2-1/8" diameter ball and be fully enclosed. Toilet waste outlet shall be a gasketed waste.

Acorn Engineering Company • 15125 Proctor Avenue • P.O. Box 3527 • City of Industry, CA 91744-0527 U.S.A.
Tel: (800) 488-8999 • (626) 336-4561 • Fax: (626) 961-2200 • www.acorneng.com • E-mail: info@acorneng.com

Dura-Ware®: 2110 Blowout Jet Toilet - On Floor

WALL THICKNESS AND TYPE (Must Specify)
Thickness: _____ Type: ❑ Concrete ❑ Block ❑ Steel

MODEL NUMBER AND OPTIONS SELECTION:

BASE MODEL NUMBER
☑ 2110 Blowout Jet Toilet

SUPPLY (Must Specify)
❑ -T Top (Exposed)
❑ -W Wall (Concealed)

FIXTURE MOUNTING AND WASTE (Must Specify)
☑ -2 On-Floor, Wall Outlet

FLUSH VALVE GPF'S (Must Specify)
❑ -HET 1.28 GPF
❑ -ULF 1.6 GPF
❑ -3.5 GPF

FLUSH VALVE OPTIONS (Must Specify)
Refer to Acorn Dura-Ware Supplementary for Box Cover(s) and Access Panel(s)
❑ -FV Flush Valve, Mechanical (N/A for ADA)
❑ -FVBO Flush Valve by Other
❑ -FVH Flush Valve, Hydraulic (N/A for Top Supply)
❑ -FVL Flush Valve, ADA Lever Handle
❑ -MVCFV Time-Trol Flush Valve (N/A for Top Supply)

PRODUCT OPTIONS (Must Specify)
❑ -ADA 18" Integral Seat Height
❑ -BCN Blind Cap Nuts (2)
❑ -BL Bedpan Lugs
❑ -CN Cap Nuts (2)
❑ -EG Enviro-Glaze: Specify Color: _____
❑ -Toilet Exterior Only
❑ -Toilet Interior
❑ -FG 14 Gage Housing
❑ -FT Flood-Trol (N/A for Top Supply)
❑ -FTA Flood-Trol Auto-Reset (N/A for Top Supply)
❑ -FTE Flood-Trol Electronic
❑ -FVT Flush Valve Thru Wall Connection
❑ -HET High Efficiency Toilet Design
❑ -HPS High Polish Integral Seat
❑ -HS-OFLC Hinged Seat, Open Front Less Cover (N/A with #2802 Flush Valve Cover)
❑ -HS-OFWC Hinged Seat w/ Cover (N/A with #2802 Flush Valve Cover)
❑ -PE Plain End Waste Extended 3" Beyond Rear of Fixture
❑ -PFS Punched for Seat by Others
❑ -TF Transformer, 120VAC to 24VAC
❑ -TSC Toilet Shipping Cover
❑ -VAC AcornVAC System

Please visit ***www.acorneng.com*** for most current specifications.

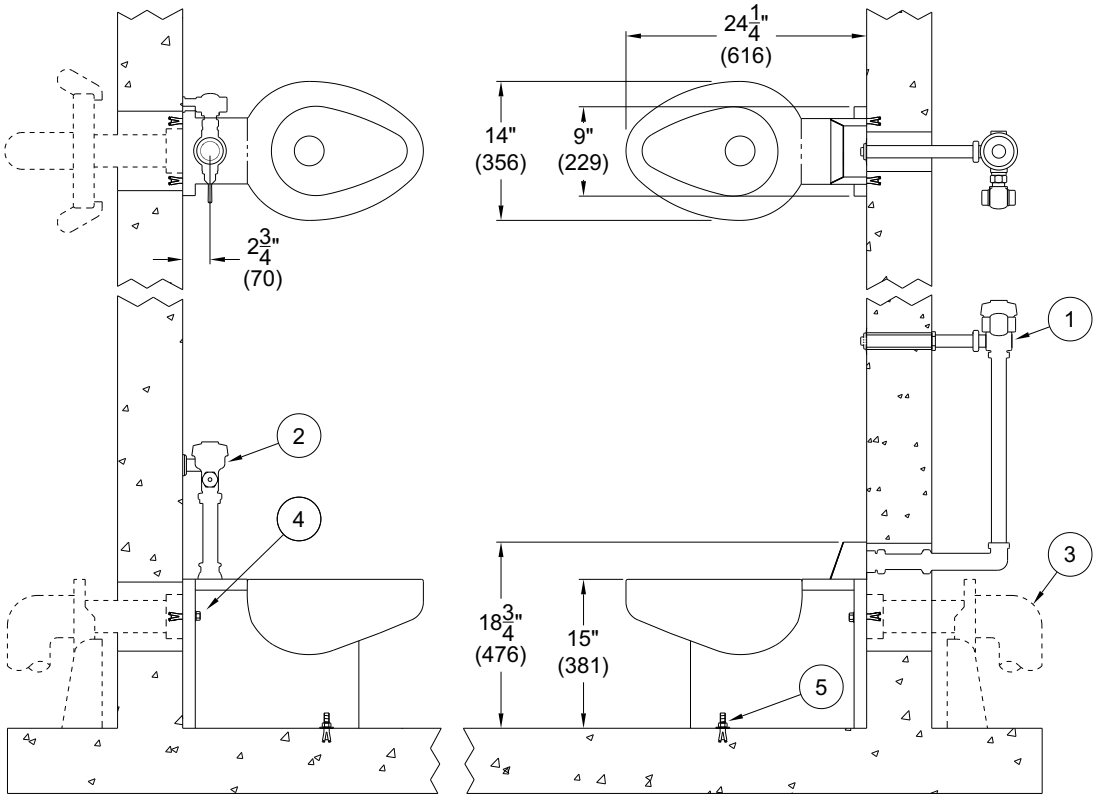

2110-T-2 2110-W-2

NOTES:
1. Optional -FV Flush Valve - Wall Supply
2. Optional -FV Flush Valve - Top Supply
3. Waste Fitting (By Others)
4. Wall Mounting Fasteners
5. Floor Fasteners

Important: Installation instructions and current rough-in are furnished with each fixture. Do not rough in without certified dimensions.
Dimensions are subject to manufacturer's tolerance of plus or minus 1/4" and change without notice. Acorn assumes no responsibility for use of void or superseded data. © Copyright 2009 Acorn Engineering Company

Selection Summary	Approved for Manufacturing
Model No. & Option_____	Company_____Title_____
Quantity_____	Signature_____ Date_____

Acorn Engineering Company • 15125 Proctor Avenue • P.O. Box 3527 • City of Industry, CA 91744-0527 U.S.A.
Tel: (800) 488-8999 • (626) 336-4561 • Fax: (626) 961-2200 • www.acorneng.com • E-mail: info@acorneng.com

Solid Plastic Seats Elongated

Institutional • Commercial • Heavy-Duty

500 SERIES

Available in Antimicrobial.
Available in Fire-Retardant.

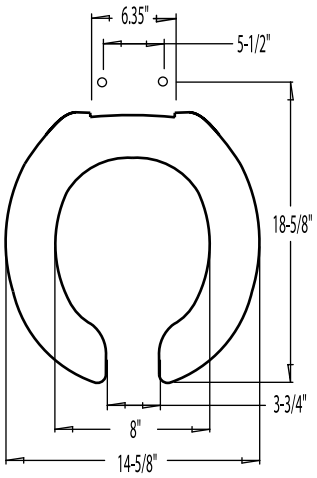

DETAILS

500CC Heavy-duty, open front, less cover for elongated bowl. Plated steel check-hinge with gasket and plastic nuts.

500CCSS Heavy-duty, open front, less cover for elongated bowl. Self-sustaining plated steel check-hinge with gasket and plastic nuts.

500STSCC Heavy-duty, open front, less cover for elongated bowl. Stainless steel check-hinge with gasket, metal flat washers, lock washers and stainless steel nuts.

500STSCCSS Heavy-duty, open front, less cover for elongated bowl. Self-sustaining stainless steel check-hinge with gasket, metal flat washers, lock washers, stainless steel nuts.

Standard Features:

- Corrosion-free stainless steel hinge posts
- Check-hinge posts
- Extended back with concealed hinge
- Integrally-molded, permanent and sanitary color-keyed bumpers
- Corrosion-free hardware
- Withstands cleansers, strong chemicals
- Self-sustaining hinge available

Color	Code #	500 CC	500 CCSS	500 STSCC	500 STSCCSS
White	001	● ❑	● ❑	● ❑	● ❑
Cotton/Crane White	301	● ❑	● ❑	● ❑	❑
Linen/Biscuit	416				❑
Black	407	● ❑	● ❑	● ❑	● ❑
Bone/Almond	106-A				● ❑

Canada ● U.S. ❑

HIGH-EFFICIENCY TOILET

Royal® Model Flushometer 111-1.28

EPA GREEN POWER PARTNER

Sloan Valve Company is buying renewable energy certificates to meet 100% of the company's purchased electricity use at its Franklin Park, Illinois facility.

Made with Renewable Energy

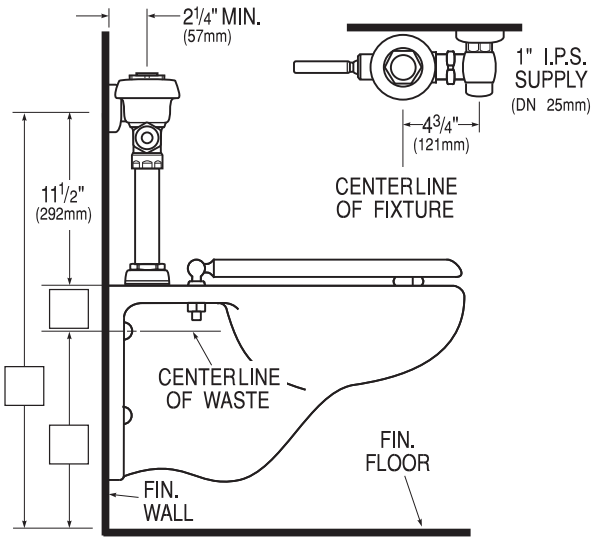

Description

Exposed Water Closet Flushometer, for floor mounted or wall hung top spud bowls.

Flush Cycle

Model 111-1.28 High Efficiency (1.28 gpf/4.8 Lpf)

Specifications

Quiet, Exposed, Diaphragm Type, Chrome Plated Closet Flushometer for left or right hand supply with the following features:

- PERMEX™ Synthetic Rubber Diaphragm with Dual Filtered Fixed Bypass
- ADA Compliant Metal Oscillating Non-Hold-Open Handle with Triple Seal Handle Packing
- 1" I.P.S. Screwdriver Bak-Chek® Angle Stop
- Free Spinning Vandal Resistant Stop Cap
- Adjustable Tailpiece
- High Back Pressure Vacuum Breaker Flush Connection with One-piece Bottom Hex Coupling Nut
- Spud Coupling and Flange for 1½" Top Spud
- Sweat Solder Adapter w/Cover Tube & Cast Wall Flange w/Set Screw
- High Copper, Low Zinc Brass Castings for Dezincification Resistance
- Non-Hold-Open Handle, Fixed Metering Bypass and No External Volume Adjustment to Ensure Water Conservation
- Flush Accuracy Controlled by CID™ Technology
- Diaphragm, Handle Packing, Stop Seat and Vacuum Breaker molded from PERMEX™ Rubber Compound for Chloramine Resistance

Valve Body, Cover, Tailpiece and Control Stop shall be in conformance with ASTM Alloy Classification for Semi-Red Brass. Valve shall be in compliance to the applicable sections of ASSE 1037.

Variations

☐ XVV Valve Less Vacuum Breaker

☐ SG SaniGuard® Antimicrobial Handle and Socket

Accessories

See Accessories Section of the Sloan catalog for details on these and other Flushometer variations.

Fixtures

Consult Sloan for Sloan brand matching fixture options.

Made In The USA

CERTIFIED cradle to cradle SILVER

Buy American Act Compliant

This space for Architect/Engineer approval

Job Name _____ Date _____

Model Specified _____ Quantity _____

Variations Specified _____

Customer/Wholesaler _____

Contractor _____

Architect _____

The information contained in this document is subject to change without notice.

SLOAN®

SLOAN VALVE COMPANY • 10500 SEYMOUR AVE. • FRANKLIN PARK, IL 60131
Ph: 1-800-982-5839 or 1-847-671-4300 • Fax: 1-800-447-8329 or 1-847-671-4380
www.sloanvalve.com

Royal 111-1.28 S.S. — Rev. 1 (11/10)
Copyright © 2010 SLOAN VALVE COMPANY

Penal-Ware® 1709HEU Series

ADA Compliant High Efficiency Urinal

1709HEU-W-1

Fixture May Show Some Available Options

Please visit ***www.acorneng.com*** for most current specifications.

ADA Compliant High Efficiency Urinal

Penal-Ware High Efficiency Urinals are engineered to combine attractive looks with versatility, and intended for mounting onto a finished wall from an accessible pipe chase. Unit features a contoured interior to facilitate cleaning. Urinals mounted at 17" rim height comply with ANSI, ADA, UFAS accessibility requirements. Compliance is subject to the interpretation and requirements of the local code authority.

Fixture bowl is fabricated of 16 gage type 304 stainless steel and the housing fabricated of 18 gage type 304 stainless steel with exterior surfaces polished to a satin finish.

Urinal is a high efficiency type requiring a 1/8 GPF (0.47 Liters per Flush) to 1/2 GPF (1.8 Liters per Flush) flush valve and supplied with 3/4" NPT flushing inlet connection and 1-1/2" O.D. plain end P-Trap.

GUIDE SPECIFICATION

Provide Acorn Penal-Ware Stainless Steel Urinal (specify model number and options). Urinal mounted at 17" rim height to comply with ANSI, ADA and UFAS accessibility requirements. Interior to have a contoured surface to facilitate cleaning. Fixture shall be fabricated of 18 gage with 16 gage bowl type 304 stainless steel with exposed surfaces polished to a satin finish.

Acorn Engineering Co. • 15125 Proctor Ave. • P.O. Box 3527 • City of Industry, CA 91744-0527 U.S.A.
Tel: (800)488-8999 • (626) 336-4561 • (626) 961-2200 • www.acorneng.com • E-mail: info@acorneng.com

Penal-Ware® 1709HEU High Efficiency Urinal - ADA Compliant

MODEL NUMBER AND OPTIONS SELECTION

WALL THICKNESS AND TYPE
Thickness: _____ Type: ❑ Concrete ❑ Block ❑ Steel

BASE MODEL NUMBER
☑ -1709HEU High Efficiency Urinal

SUPPLY SELECTION (Must Specify)
❑ -T Top (Exposed)
❑ -W Wall (Concealed)

FIXTURE MOUNTING & WASTE (Must Specify)
☑ -1 Off-Floor, Wall Outlet

FLUSH VALVE GPF's (Must Specify)
❑ -0.125 GPF (by Others)
❑ -0.5 GPF

Please ***visit www.acorneng.com*** for most current specifications.

FLUSH VALVE OPTIONS (Must Specify)
Refer to Acorn Dura-Ware Supplementary for Box Cover(s) and Access Panel(s)

❑ -EVSFV Electronic Flush Valve (N/A for Top Supply)
❑ -EVSPFV Electronic Flush Valve w/ Piezo Pushbutton (N/A for Top Supply)
❑ -FV Flush Valve, Mechanical (N/A for ADA)
❑ -FVBO Flush Valve by Others
❑ -FVH Flush Valve, Hydraulic (N/A for Top Supply)
❑ -FVL Flush Valve, ADA Lever Handle
❑ -MVCFV Time-Trol Flush Valve (N/A for Top Supply)

PRODUCT OPTIONS (Must Specify)
❑ -EG Enviro-Glaze Color, Specify: _____
❑ -MT Metal Template
❑ -SW Wall Sleeve
❑ -TF Transformer, 120VAC to 24VAC

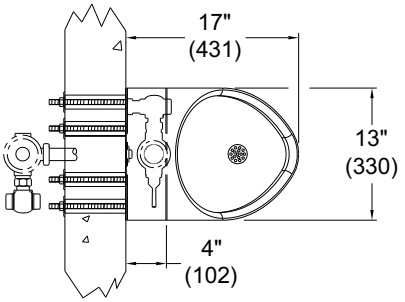

1. Flush Nozzle
2. 1-1/2" O.D. Stainless Steel P-Trap Assembly
3. Optional -T Top Supply -FV Flush Valve
4. Optional -W Wall Supply -FV Flush Valve
5. 3/4" NPT Flushing Inlet Connection

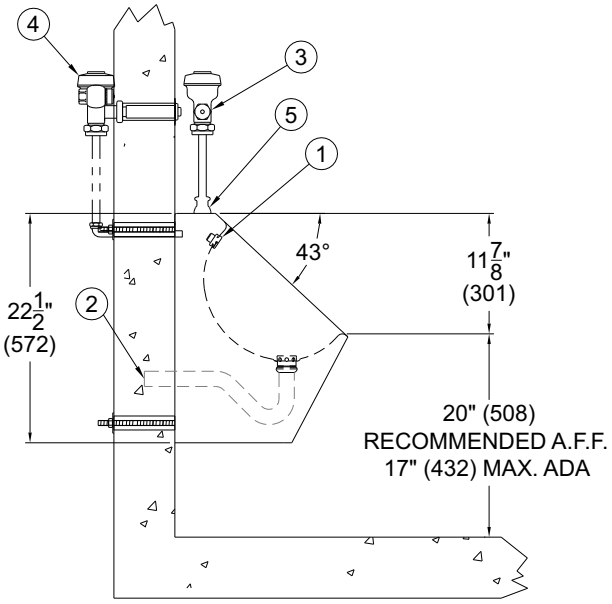

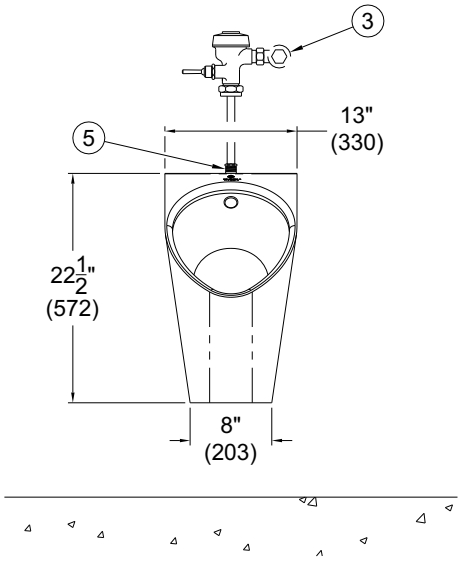

MODEL #1709HEU-T/W-1

Important: Installation instructions and current rough-in are furnished with each fixture. Do not rough in without certified dimensions.
Dimensions are subject to manufacturer's tolerance of plus or minus 1/4" and change without notice. Acorn assumes no responsibility for use of void or superseded data. © Copyright 2008 Acorn Engineering Company

Selection Summary	Approved for Manufacturing
Model No. & Option_____	Company_____Title_____
Quantity_____	Signature_____ Date_____

Acorn Engineering Co. • 15125 Proctor Ave. • P.O. Box 3527 • City of Industry, CA 91744-0527 U.S.A.
Tel: (800)488-8999 • (626) 336-4561 • (626) 961-2200 • www.acorneng.com • E-mail: info@acorneng.com

Royal® Model Flushometer

186
186-1.0
186-0.5

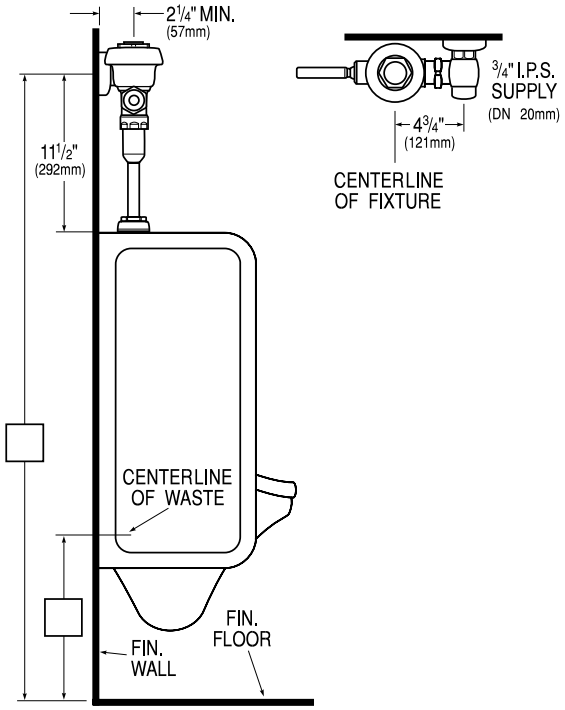

Description

Exposed Urinal Flushometer, for ¾" top spud urinals.

Flush Cycle

☐ Model 186 Water Saver (1.5 gpf/5.7 Lpf)
☐ Model 186-1.0 Low Consumption (1.0 gpf/3.8 Lpf)
☐ Model 186-0.5 (0.5 gpf/1.9 Lpf)

Specifications

Quiet, Exposed, Diaphragm Type, Chrome Plated Urinal Flushometer with the following features:

- PERMEX™ Synthetic Rubber Diaphragm with Dual Filtered Fixed Bypass
- ADA Compliant Metal Oscillating Non-Hold-Open Handle with Triple Seal Handle Packing
- ¾" I.P.S. Screwdriver Bak-Chek™ Angle Stop
- Free Spinning Vandal Resistant Stop Cap
- Adjustable Tailpiece
- High Back Pressure Vacuum Breaker Flush Connection with One-piece Bottom Hex Coupling Nut
- Spud Coupling and Flange for ¾" Top Spud
- Sweat Solder Adapter with Cover Tube and Cast Set Screw Wall Flange
- High Copper, Low Zinc Brass Castings for Dezincification Resistance
- Non-Hold-Open Handle, Fixed Metering Bypass and No External Volume Adjustment to Ensure Water Conservation
- Flush Accuracy Controlled by CID™ Technology
- Diaphragm, Handle Packing, Stop Seat and Vacuum Breaker to be molded from PERMEX™ Rubber Compound for Chloramine Resistance

Valve Body, Cover, Tailpiece and Control Stop shall be in conformance with ASTM Alloy Classification for Semi-Red Brass. Valve shall be in compliance to the applicable sections of ASSE 1037, ANSI/ASME 112.19.6, and Military Specification V-29193.

Variations

☐ **HL-3** 3" Metal Oscillating Push Button on front of valve (does not meet ADA requirements

See Accessories Section of the Sloan catalog for details on these and other Flushometer variations.

® Certified

® Listed by I.A.P.M.O.

This space for Architect/Engineer approval

The information contained in this document is subject to change without notice.

SLOAN®

Made in the U.S.A.

SLOAN VALVE COMPANY • 10500 SEYMOUR AVE. • FRANKLIN PARK, IL. 60131
Ph: 1-800-9-VALVE-9 or 1-847-671-4300 • Fax: 1-800-447-8329 or 1-847-671-4380
http://www.sloanvalve.com

Royal 186 S.S. — Rev. 1 (12/01)
Copyright © 2001 SLOAN VALVE COMPANY Printed in the U.S.A.

Dura-Ware® 1953 Series

18" Lavatory - ADA Compliant

1953-ADA-1-DMS-04-M-GT-TPT

1953-ADA-1-CSG

Fixture May Show Some Available Options

Please visit ***www.acorneng.com*** for most current specifications.

18" Lavatory - ADA Compliant

Fixture is designed to be installed and serviced on the front side of a finished wall. The fixture is fabricated from 16 gage, type 304 stainless steel and is seamless welded construction. Exterior has a satin finish. Unit conforms with ANSI, UFAS and ADA requirements for accessibility. Compliance is subject to the interpretation and requirements of the local code authority.

Lavatory Rectangular Bowl is 14" x 12" x 5" deep. The deck has an integral, self-draining soap dish. The lavatory includes 1-1/2” drain punching to receive optional -GE or -GT grid strainer. Lavatory angle braces and fasteners for securing the braces to the lavatory are furnished, unless option -LC is specified. Wall fasteners by others.

Lavatory Valves (ADA compliant) available with valves and faucet/spouts that conform with lead free requirements for NSF61, Section 9, 1997 and CHSC 116875.

1. Air control pushbutton valves using atmospheric air; metering non-hold open type. Timing is from 5 to 60 seconds. Air control valves can be remotely located up to 10 feet from the operating pushbutton.

2. Electronic valve system using Modular Valve Controller for water metering through precise electronic control of a solenoid valve. Valve timing is from 1 second to 9 minutes. Modular Valve Controller can be remotely located up to 100 feet from the operating pushbutton.

3. Centerset with gooseneck spout and wrist blade handles, suffix -CSG.

Regularly furnished are angle braces and fasteners. Mounting screws and anchor shields are furnished by others.

GUIDE SPECIFICATION

Provide and install an Acorn Dura-Ware, 18" wide ADA Compliant Lavatory (specify model number and options). Fixture shall be fabricated from heavy gage, type 304 stainless steel. Construction shall be seamless welded with a satin finish exterior. Lavatory deck shall have an integral air-circulating, self-draining soap dish. Lavatory angle braces and fasteners shall be furnished by manufacturer (except with -LC option). Installation shall be made in accordance with manufacturer’s recommendation and details. Units to conform with ANSI, UFAS and ADA requirements for accessibility.

Acorn Engineering Company • 15125 Proctor Avenue • P.O. Box 3527 • City of Industry, CA 91744-0527 U.S.A.
Tel: (800) 488-8999 • (626) 336-4561 • Fax: (626) 961-2200 • www.acorneng.com • E-mail: info@acorneng.com

Dura-Ware® 1953: 18" Lavatory - ADA Compliant

WALL THICKNESS AND TYPE (Must Specify)
Thickness _____ Type: ❑ Concrete ❑ Block ❑ Steel

MODEL NUMBER AND OPTIONS SELECTION

BASE MODEL NUMBER
☑ 1953 18" x 22" ADA Compliant Lavatory

FIXTURE MOUNTING AND WASTE (Must Specify)
☑ -1 Off-Floor, Wall Outlet

BUBBLER OR SPOUT SELECTION (Must Specify)
❑ -CSG Centerset with Gooseneck Spout and Wrist Blade Handles
❑ -DMS Deck Mounted Spout, 1.4 GPM

VALVE SELECTION (Must Specify)
❑ -03-M Air-Control, Single Temp, Metering
❑ -04-M Air-Control, H & C, Metering
❑ -9 Without Valves (Standard Punching is (3) 1-5/16" Diameter Holes with 4" Centerset).
❑ -MVC1 Time-Trol - Single Temp
❑ -MVC2 Time-Trol - Hot & Cold
❑ -PPZ1 Programmable Piezo Button - Single Temp
❑ -PPZ2 Programmable Piezo Button - Hot & Cold

DECK PUNCHING
*** Must Specify when selecting -09 valve option, standard H34 (3) 1-5/16" dia. holes on 4" center.**
❑ -H1 Single Hole Centered
❑ -H24 Two Holes 4" Centerset
❑ -H28 Two Holes 8" Centerset*
❑ -H38 Three Holes 8" Centerset*

*Eliminates soap dish depression when selected.

PRODUCT OPTIONS (Must Specify)
❑ -BRS Brass Body Valve
❑ -EE Elbow Enclosure
❑ -EG Enviro-Glaze Color, Specify: _____
❑ -FG 14 Gage Housing
❑ -GE Grid Strainer w/Close Elbow 1-1/4"
❑ -GT Grid Strainer w/Tailpiece 1-1/4"
❑ -OF Lavatory Overflow
❑ -TE Trap Enclosure
❑ -TPT Tubular P-Trap 1-1/4" x 1-1/2"

Please visit ***www.acorneng.com*** for most current specifications.

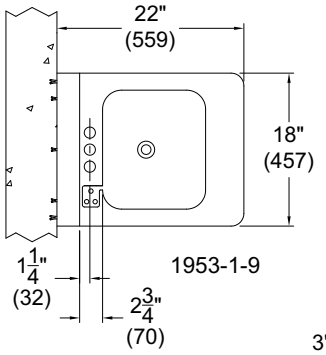

1953-1-9

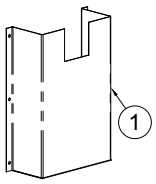

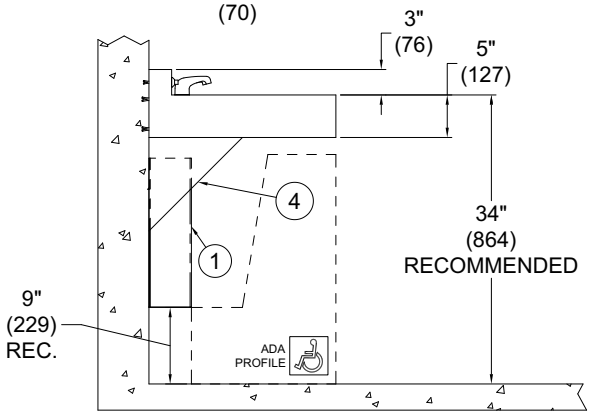

1953-1-DMS-04-M

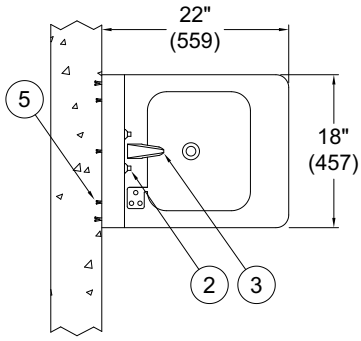

NOTES:
1. Valve Cover Provided With Electronic Metering or Air-Control Valve Options Only.
2. Lavy Valve Pushbuttons.
3. Optional -DMS Deck Mounted Spout.
4. Standard Angle Brace.
5. Wall Mounting Anchors (By Others).

Important: Installation instructions and current rough-in are furnished with each fixture. Do not rough in without certified dimensions.
Dimensions are subject to manufacturer's tolerance of plus or minus 1/4" and change without notice. Acorn assumes no responsibility for use of void or superseded data. © Copyright 2009 Acorn Engineering Company

Selection Summary	Approved for Manufacturing
Model No. & Option_____	Company_____Title_____
Quantity_____	Signature_____ Date_____

Acorn Engineering Company • 15125 Proctor Avenue • P.O. Box 3527 • City of Industry, CA 91744-0527 U.S.A.
Tel: (800) 488-8999 • (626) 336-4561 • Fax: (626) 961-2200 • www.acorneng.com • E-mail: info@acorneng.com

MVP FAUCETS

333-665PSHABCP

Manual and Metering Faucets

Product Type

Deck Mounted Single Hole Single Supply Metering Sink Faucet

Features & Specifications

- Single Hole
- 2.2 GPM (8.3 L/min) Aerator
- 1 3/4" Vandal Proof MVP Metering Push Handle
- MVP Metering Adjustable Cycle Time Closure Cartridge
- 1/2" NPSM Supply Inlet with Coupling Nut for 3/8" or 1/2" Flexible Riser
- 3 3/8" Center to Center Integral Cast Brass Spout
- ECAST® design provides durable brass construction with total lead content equal to or less than 0.25% by weighted average
- CFNow! Item Ships in 5 Days

Job Name _____

Item Number _____

Section/Tag _____

Model Specified _____

Architect _____

Engineer _____

Contractor _____

[ ] Submitted as Shown [ ] Submitted with Variations

Date _____

Performance Specification

- Rated Operating Pressure: 20-125 PSI
- Rated Operating Temperature: 40-140ºF

Warranty

- Lifetime Limited Faucet Warranty
- 5-Year Limited Cartridge Warranty
- 1-Year Limited Finish Warranty

Codes & Standards

- ASME A112.18.1/CSA B125.1
- Certified to NSF/ANSI 61, Section 9 by CSA
- California Health and Safety Code 116875 (AB1953-2006)
- Vermont Bill S.152
- NSF/ANSI 372 Low Lead Content
- ADA ANSI/ICC A117.1

ECAST

ECAST products are intended for installation where state laws and local codes mandate lead content levels or in any location where lead content is a concern.

2100 South Clearwater Drive
Des Plaines, IL
P: 847/803-5000
F: 847/803-5454
Technical: 800/TEC-TRUE
www.chicagofaucets.com

333-665PSHABCP

Manual and Metering Faucets

Architect/Engineer Specification

Chicago Faucets No. 333-665PSHABCP, Deck Mounted Single Hole Single Supply Metering Sink Faucet, Chrome Plated solid brass construction. 3 3/8" Center to Center Integral Cast Brass Spout. 2.2 GPM (8.3 L/min) Pressure Compensating Softflo Aerator. 1 3/4" Metal Vandal Proof MVP Metering Push handle(s) with Blue or Red Button. MVP™ self-closing, auto-timed metering cartridge, adjustable run time from 2 to 15 seconds, opens with push, 0.20 max gallon/cycle. 1/2" NPSM Supply Inlet with Coupling Nut for 3/8" or 1/2" Flexible Riser. ECAST® construction with less than 0.25% lead content by weighted average. Secondary Control Valve: 3 3/8" Center to Center Integral Cast Brass Spout. This product meets ADA ANSI/ICC A117.1 requirements and is tested and certified to industry standards: ASME A112.18.1/CSA B125.1, Certified to NSF/ANSI 61, Section 9 by CSA, California Health and Safety Code 116875 (AB1953-2006), Vermont Bill S.152, and NSF/ANSI 372 Low Lead Content.

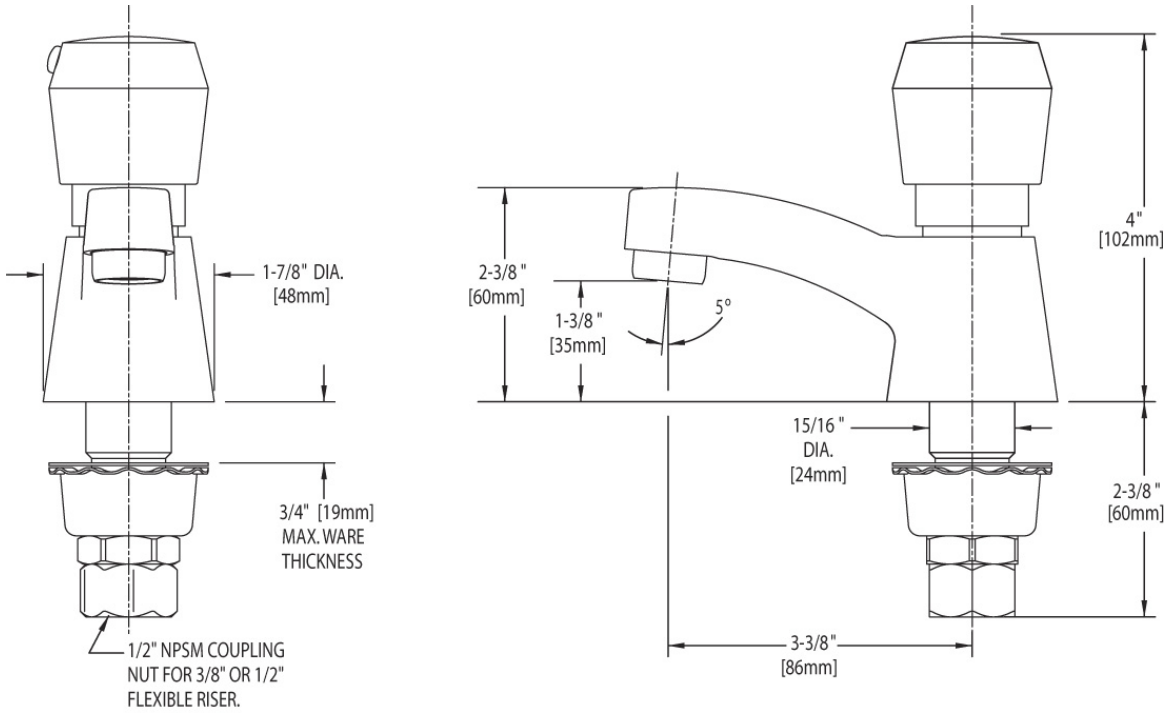

Operation and Maintenance

Installation should be in accordance with local plumbing codes. Flush all pipes thoroughly before installation. After installation, remove spout outlet or flow control and flush faucet thoroughly to clear any debris. Care should be taken when cleaning the product. Do not use abrasive cleaners, chemicals or solvents as they can result in surface damage. Use mild soap and warm water for cleaning and protecting the life of Chicago Faucet products. For specific operation and maintenance refer to the installation instructions and repair parts documents that are located at www.chicagofaucets.com.

Chicago Faucets, member of the Geberit Group, is the leading brand of commercial faucets and fittings in the United States, offering a complete range of products for schools, laboratories, hospitals, office buildings, food service, airports and sport facilities. Call 1.800.TECTRUE or 1.847.803.5000 Option 1 for installation or other technical assistance.

2100 South Clearwater Drive
Des Plaines, IL
P: 847/803-5000
F: 847/803-5454
Technical: 800/TEC-TRUE
www.chicagofaucets.com

LAV GUARD® 2

FAST FIT UNDERSINK PIPING COVERS

All New E-Z Series

NEW, Improved, fast-installing antimicrobial molded undersink safety covers for ADA accessibility compliance

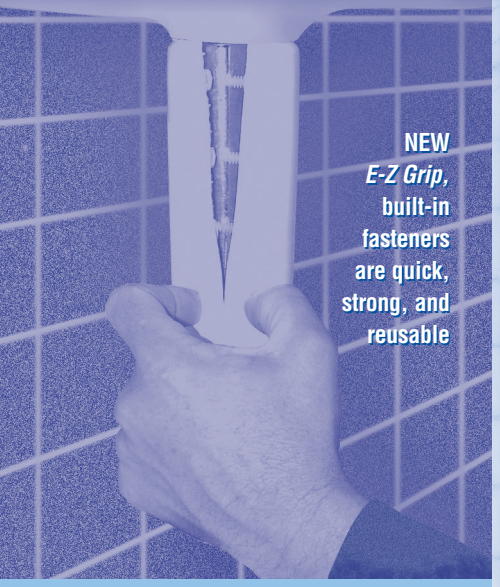

NEW *E-Z Grip*, built-in fasteners are quick, strong, and reusable

New Lav Guard® 2 E-Z series provides the durable, attractive protection Lav Guard® is famous for. Now, built-in *E-Z Grip* fasteners and internal *E-Z Tear-To-Fit* trimming feature eliminate the need for tools, and provide for a clean, tamper-resistant, **super-fast** professional installation.

Since 1990, we at TRUEBRO, INC. have concentrated our efforts on "Making America Accessible" by creating products that address ADA-mandated undersink wheelchair accessibility.

Specifying TRUEBRO is your assurance of protecting people with disabilities while providing quality, durability, and improved aesthetics.

Proudly Made in the U.S.A.

TRUEBRO®

MAKING AMERICA ACCESSIBLE

An IPS CORPORATION IPS Brand

UPC®

LAV GUARD 2
FAST FIT UNDERSINK PIPING COVERS

10800/TRU
BuyLine 9143

Features and Benefits:

New, improved E-Z series makes installation super-fast

- New *E-Z Tear-To-Fit* feature makes trimming super-fast and contractor-friendly—no tools required.
- New *E-Z Grip* built-in fasteners are quick, strong, and reusable.
- New universal design fits more P-traps and thumb wings on plastic compression nuts.

LAV GUARD 2 E-Z series installs in just 2 easy steps:

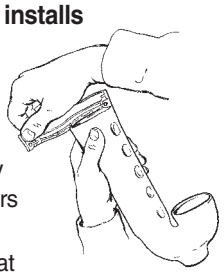

1. *Tear-To-Fit* on internal, dimensioned tear lines for quick, clean, accurate trimming to fit virtually any piping configuration. Covers flex to install over pipes.

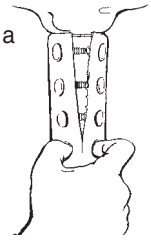

2. Press seams together at finger recesses to engage *E-Z Grip* internal fasteners for a secure, safe, tamper-resistant installation. To remove cover, firmly pull seam apart using a strong grip. To reinstall, press seams back together.

Strict code compliance minimizes risk.

LAV GUARD 2 complies with: ADA article 4.19.4, CABO/ANSI 4.20.4, UFAS 4.19.4, Calif. Title 24, UBC, IBC, ICC, Canada Barrier-Free Code

Suggested Specification:

ADA-conforming, wheelchair accessible lavatory P-trap and angle valve assemblies shall be covered with white, molded, antimicrobial TRUEBRO, INC. LAV GUARD 2 undersink pipe covers. Cover shall have internal, *E-Z Tear-To-Fit* trim feature for square, clean trimming—internal ribs—and built-in, concealed *E-Z Grip* fasteners (no cable-tie fasteners allowed).

Model _____

Accessory _____

TRUEBRO®
MAKING AMERICA ACCESSIBLE
An IPS CORPORATION IPS Brand

IPS Corporation
202 Industrial Park Lane
Collierville, TN 38017
(901) 853-5001 (800) 340-5969
FAX: (901) 853-5008
e-mail: info@truebro.com
Internet: http://www.truebro.com

Manufactured under one or more of the following U.S. or Canadian patents. Other patents pending.

5,303,730 5,360,031
5,524,669 5,564,463
5,678,598 5,699,828
5,915,412 5,915,413
5,901,739 5,960,820
2,075,324 2,119,427
2,136,027 2,158,083

UPC®

2/05

Specifications:

Material	Soft, resilient molded vinyl
Nominal Wall	1/8" constant with internal ribs
Durometer	70-80 — Shore A
UV Protection	Will not fade or discolor
Durability	Virtually indestructible
Trimming (E-Z Series)	Internal *E-Z Tear-To-Fit* trim feature
Fasteners (E-Z Series)	Internal *E-Z Grip* fasteners, reusable
Color	China white
Compatibility #100 E-Z Series	Fits all 1-1/4" or 1-1/2" cast brass or tubular P-trap assemblies and 3/8" or 1/2" angle stop assemblies
Compatibility #400* Series	Fits all 1-1/2" schedule 40 plastic P-traps
Paintability	Apply latex paint
Burning Characteristics ASTM D-635	Self extinguished 0 sec (ATB) mm (AEB)
Bacteria/Fungus Resistance	ASTM G21 and G22 — Result: 0 growth
Maintenance	Wipe clean using common detergents

Models Available

- #100 E-Z series for tubular P-traps
- #400W* series for schedule 40 plastic P-traps

#99 E-Z	one angle valve and supply cover
#100 E-Z & #400W*	one P-trap cover
#101 E-Z & #401W*	one P-trap cover, one angle valve and supply cover
#102 E-Z & #402W*	one P-trap cover, two angle valves and supply covers
#103 E-Z	one P-trap cover, two angle valves and supply covers, one 5" offset tailpiece wheelchair strainer cover
Accessories:	
#105 E-Z	one 5" offset tailpiece wheelchair strainer assembly
#105-K	Kohler 6" offset
#105 KW	one 6" offset tailpiece wheelchair strainer assembly
#106 E-Z	one basket strainer cover and offset waste cover (adjustable to 18")
#107 E-Z	two basket strainer covers and center or end outlet waste cover (adjustable)
Extensions:	
#EX99 E-Z	one 16" extension for water supply
#EX100 E-Z	one 16" extension for drain waste arm or tailpiece

*All #400 series items and #105 KW are the "original" LAV GUARD® design and construction.
Specifications may change without notice.

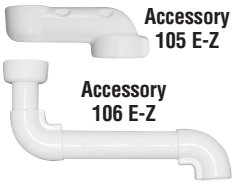

Accessory 107 E-Z
(Configuration Options Shown)

Shown with **Accessory #105 E-Z** (fits all standard 5" offset wheelchair strainers). Accessories105 E-Z,106 E-Z, and 107 E-Z can be purchased separately.

NOTE: Accessory #105 E-Z is included in **#103 E-Z** kits.

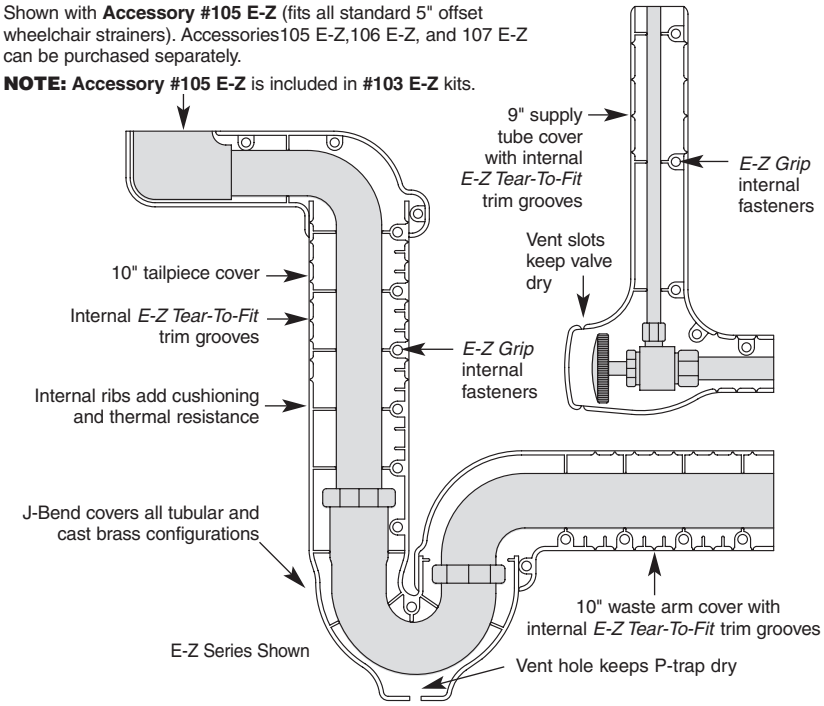

PF5514/PF5518

Wall Hung Lavatories

Product Features

- 20” x 18” Wall hung lavatory
- Available with 4” and 8” faucet drillings
- ADA compliant
- High back splash
- Concealed arm carrier connection (arm carriers not included)
- Wall mount bracket included
- Concealed front overflow

PF5518WH

Color Specifications

White

Model Numbers

PF5511WH	20” x 18” single hole lavatory, white
PF5514WH	20” x 18” 3 hole, 4” centerset lavatory, white
PF5518WH	20” x 18” 3 hole, 8” widespread lavatory, white

Available Parts

PFWMBKT	Replacement wall mount bracket

Warranty and Codes

These products come complete with installation, operating, care and maintenance instructions. All PROFLO fixtures carry a 1-year limited warranty. In an effort to continually improve our products, FEI will make design changes from time to time. We reserve the right to ship newly designed product to fill any order unless we agree in writing to do otherwise. This product meets or exceeds ASME/ANSI A112.19.2M.

Distributed Exclusively by Ferguson and Wolseley Canada

© 2013 Ferguson Enterprises, Inc. All Rights Reserved

PF5514/PF5518

Wall Hung Lavatories

Product Features

The wall mount lavatory shall be 20” x 18”. Lavatory shall be made of vitreous china. Lavatory shall have 8” centers (PF5518), or 4” centers (PF5514). Lavatory shall include overflow.

Nominal Dimensions:

20-5/8” x 18-1/2” (532mm x 470mm)

Bowl Size:

14-3/4” (375mm) wide
11” (279mm) front to back
6-1/8” (156mm) deep

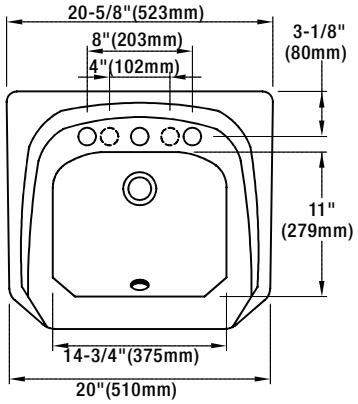

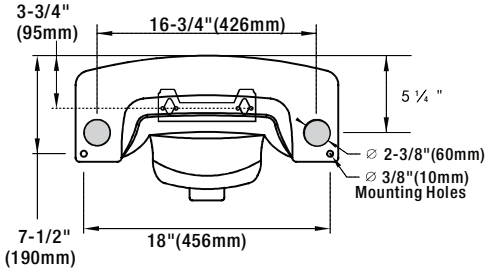

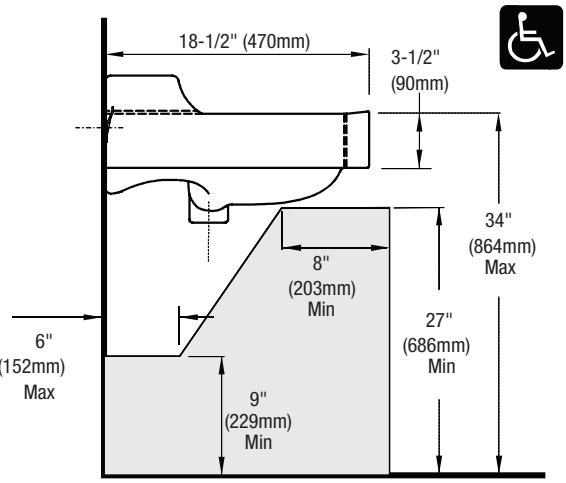

Barrier Free Installation

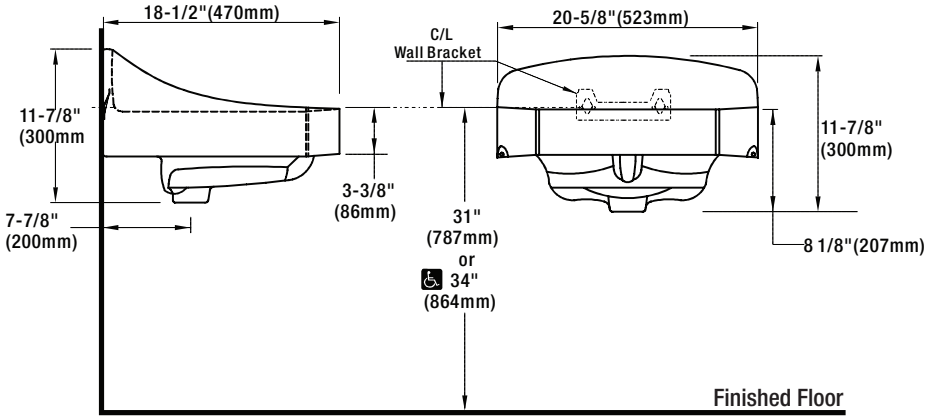

© 2013 Ferguson Enterprises, Inc. All Rights Reserved

Distributed Exclusively by Ferguson and Wolseley Canada

PFX8022M

Water Saving Two Handle Laundry Faucet

Product Features

- 4” centerset
- Ceramic cartridge
- 1.5 GPM water saving aerator
- Metal handles
- 8” spout
- Optional hose thread connection
- Complies with ASME:A112.18.1-2011/CSA:B125.1-11
- NSF61 Compliant
- NSF372 Compliant
- cUPC/IAPMO Listed
- ADA Compliant

PFX8022M

Product Specifications

Available Parts

PF111561	Hot ceramic cartridge
PF111560	Cold ceramic cartridge
PF655169	Hot lever handle
PF655168	Cold lever handle
PF654508	Aerator kit
PFX4LAVEXT	Thick deck mounting kit

Optional Accessories

PFXAER05	0.5 GPM Aerator insert

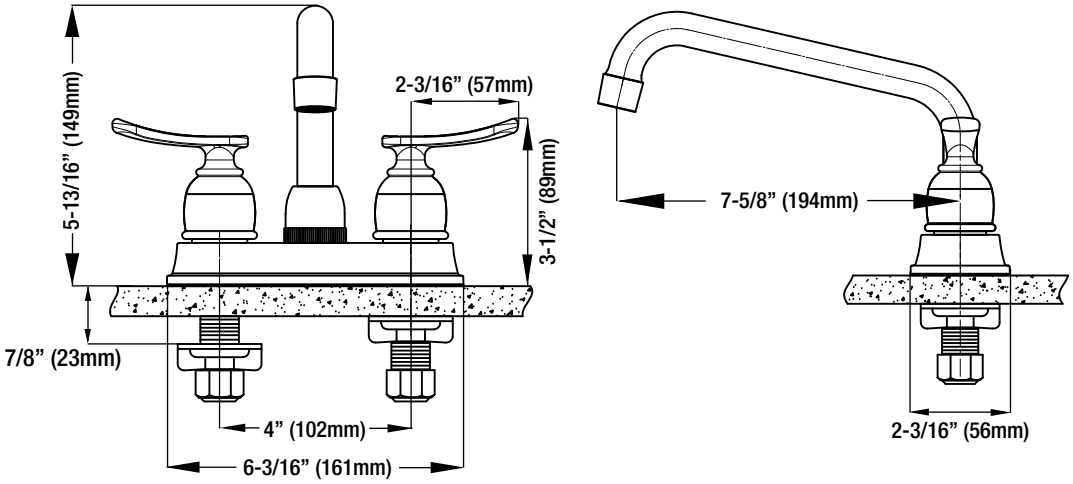

Warranty and Codes

This product comes complete with installation, operating, care and maintenance instructions.
This PROFLO faucet carries a limited lifetime warranty when installed in residential applications.
The warranty is five years in commercial applications. This product meets ASME: A112.18.1-2011
*Compliant with lead content requirements of US Senate Bill S.3874

Distributed Exclusively by Ferguson and Wolseley Canada

© 2014 Ferguson Enterprises, Inc. All Rights Reserved

CAP 14/06

MOP SERVICE BASIN 63M

Specifications

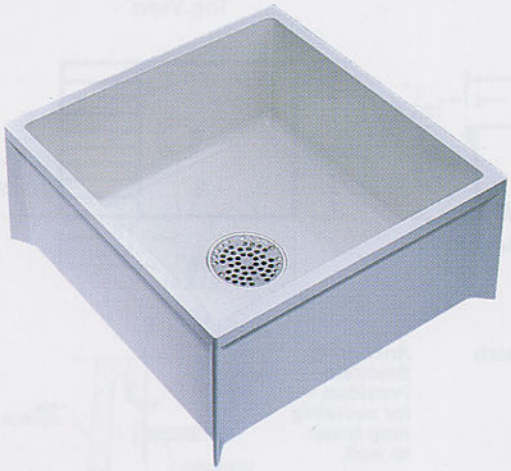

Sectional View

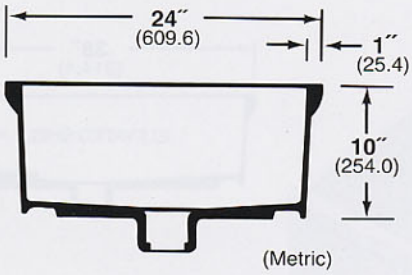

Top View

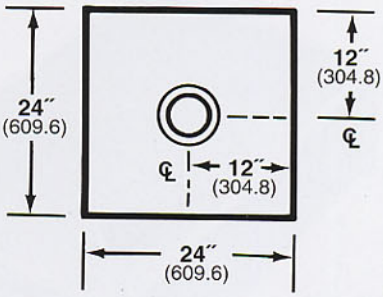

Sub-Floor Rough-in — for slab leave 2¼″ min. depth.

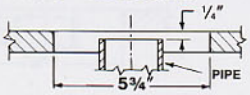

Anchoring Brackets Provided — for securing mop basin to wall.

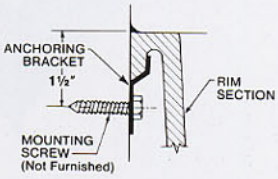

Model	Color	I.P.S.
63M	**White**	**3″**

Note: Replace furnished drain seal for installations with following pipe, order separately. Part #65.308 — for 2″ PVC, ABS and iron pipe
Part #65.311 — for 3″ soil pipe (no hub)

General: Furnish and install as shown on plans, Mop Service Basin model 63M, as manufactured by E.L. Mustee & Sons, Inc. Unit to be one-piece molded fiberglass made with matched metal molds using extreme heat and pressure. Height shall be 10″ with not less than 1″ wide shoulder. Size 24″x24″. Drain shall be integrally molded, complete with drain seal for installation of 3″ ABS, PVC (Sch. #80) and iron pipe. Removable stainless steel strainer. Performance tested to meet or exceed ANSI Specifications Z 124.2, Z 124.6 and FHA/HUD UM-73. Weight 45 lbs., cubic feet 4.2. Install in compliance with local codes.

IAPMO® Listed
File Numbers: Mop Basin — #2707

Warnock Hersey Listed
CSA Test Standards: Mop Basin — #B45.0 & #B45.5

ACCESSORIES — for complete details and specifications, specify literature ADV-357

Part No.	Description
63.600A	❶ SERVICE SINK FAUCET — brass, chrome plated, 8″ centers
65.700	❷ HOSE and HOSE HOLDER — 31″ hose and hose holder
65.600	❸ MOP HANGER — three handle holders
63.401	❹ BUMPER GUARDS — vinyl, protect rims, 20¾″ length
67.2424	❺ DURAGUARD™ WALL GUARDS — two panels and corner bracket
67.24C	❺ DURAGUARD™ WALL GUARD — one panel and corner bracket
65.308	DRAIN SEAL — for 2″ ABS, PVC and iron pipe
65.311	DRAIN SEAL — for 3″ soil pipe (no hub)

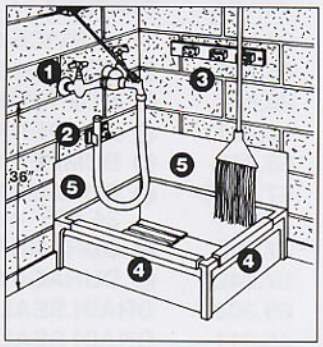

Also for Residential Installations...

Include service sink faucet, hose and hose holder. Ideal for bathing pets, cleaning garden utensils, toys, tools, etc.

MUSTEE
5431 W. 164th St., Cleveland, OH 44142 ▪ Phone (216) 267-3100, Fax (216) 267-9997

MOP BASIN ACCESSORIES

Specifications

❶ SERVICE SINK FAUCET, Part #63.600A

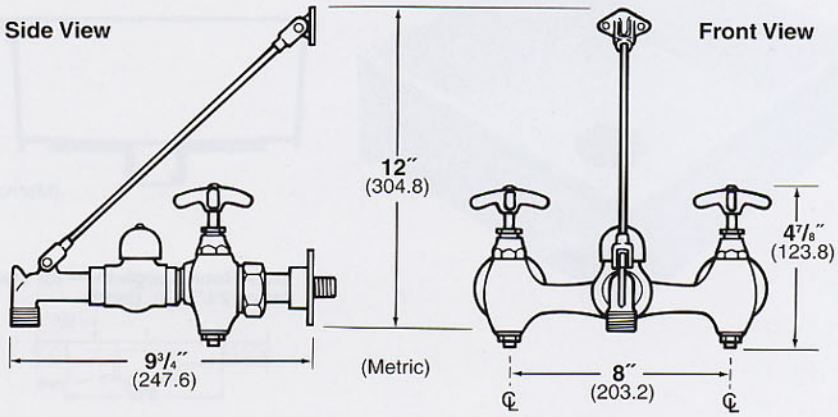

Chrome plated brass faucet with ½″ pipe eccentric inlets on 8″ centers. Vacuum breaker integral stops, chrome plated hot and cold handles, threaded ¾″ hose-end spout and pail hook. Top reinforcing bar and mounting bracket. Shall meet ANSI Specifications A 112.1.1, Section 2.9 and A 112.18.1M.

❷ HOSE and HOSE HOLDER, Part #65.700

Reinforced heavy duty 31″ rubber hose with ⅝″ diameter, brass coupling on one end. Spring-loaded, molded rubber hose holder mounted to stainless steel wall plate.

❸ MOP HANGER, Part #65.600

Three spring-loaded rubber holders mounted to 3″x24″ stainless steel wall plate.

❹ BUMPER GUARDS

Protect rims, hi-impact, rigid vinyl, snap into place.

Part #62.401—21½″ length, fit model 62M

Part #63.401—20¾″ length

Part #65.403—32¾″ length

❺ DURAGUARD™ WALL GUARDS

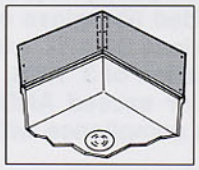

Protect wall surfaces, 12″ height, stainless steel.

Part #67.2424—two panels and bracket for 24″x24″ corner

Part #67.2436—two panels and bracket for 24″x36″ corner

Part #67.24C—one 24″ panel and corner bracket

Part #67.36C—one 36″ panel and corner bracket

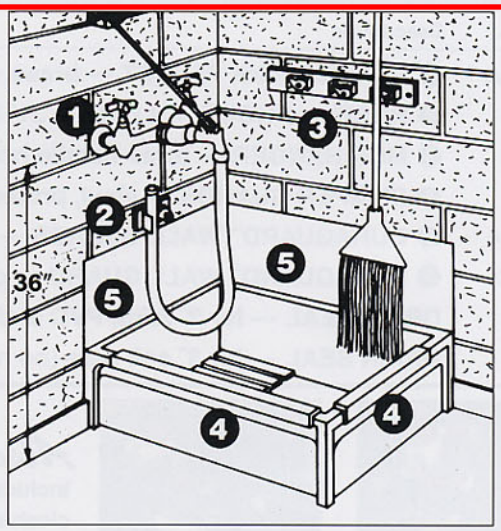

DRAIN SEALS

Replace furnished drain seal for installations with following pipe, order separately.

Part #65.308—for 2″ PVC, ABS and iron pipe

Part #65.311—for 3″ soil pipe (no hub)

To reorder this literature specify ADV-357

MUSTEE
Quality Plumbing Products Since 1926
5431 W. 164th St., Cleveland, OH 44142 ▪ Phone (216) 267-3100, Fax (216) 267-9997

Notice: Our continuous commitment to product improvement may result in changes to product specifications without notice.

AEROSPEC
BY AERO MANUFACTURING COMPANY, INC.

MODEL NO.:
AF3-1818~~12~~-24LR

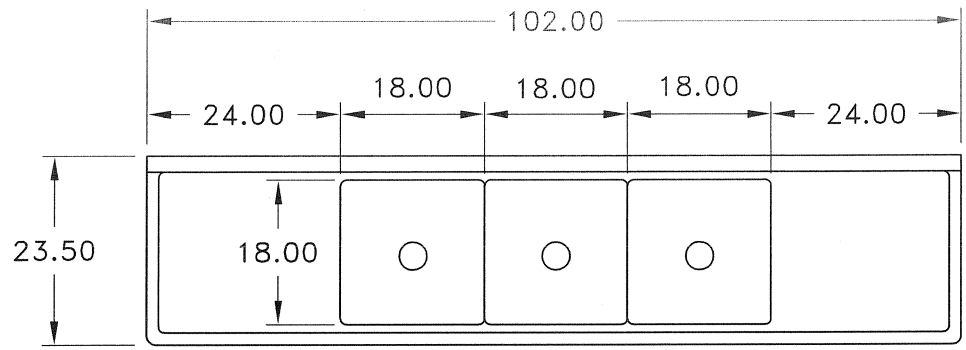

PLAN VIEW

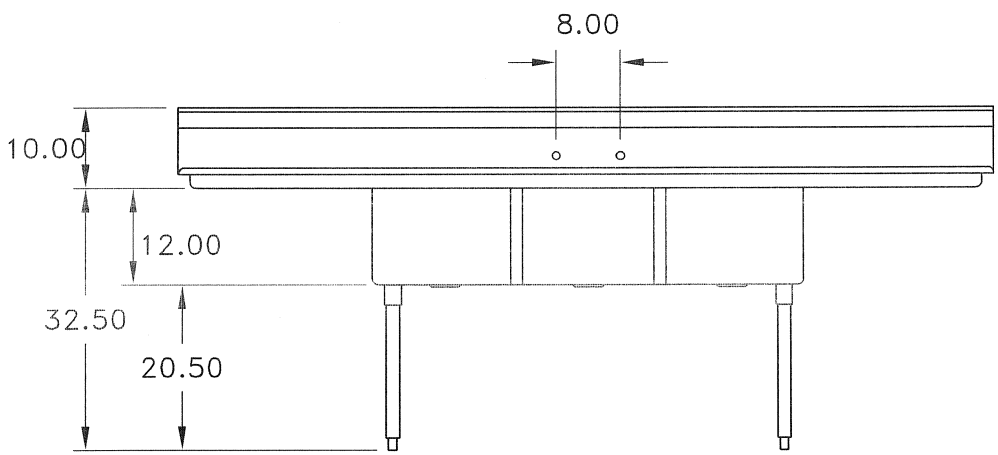

ELEVATION

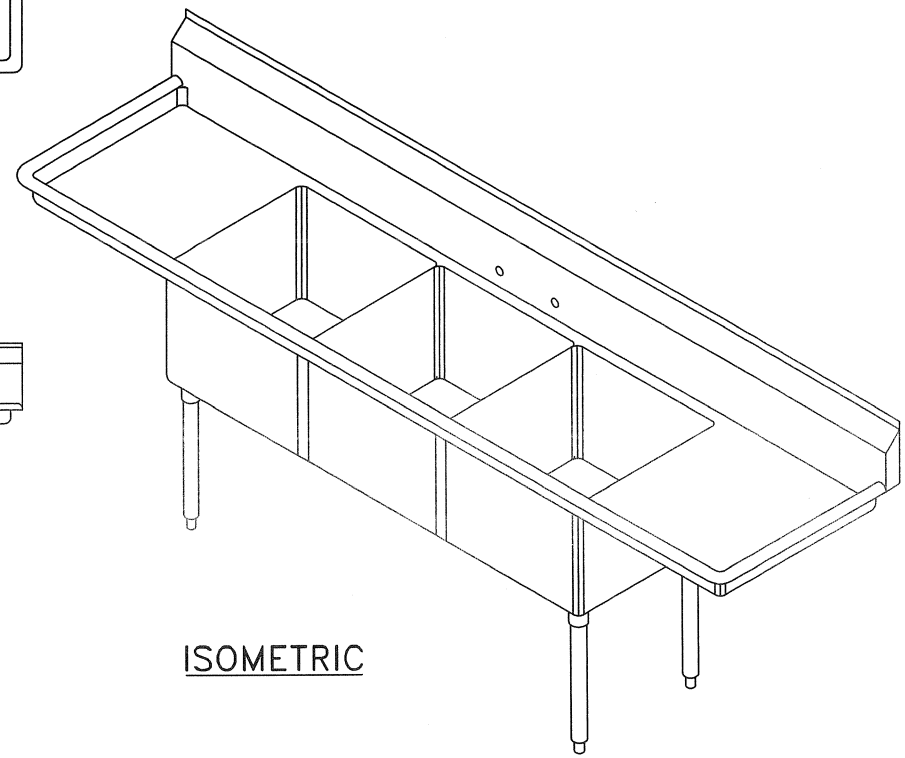

ISOMETRIC

REVISIONS	ADDITIONAL ACCESSORIES	MODEL #	TOLERANCES: DECIMAL: ±.500 FRACTION: ±1/2" UNLESS OTHERWISE SPECIFIED	AERO MANUFACTURING CO., INC. 310 ALLWOOD RD. CLIFTON, NJ 07012 TEL: 973-473-5300 FAX: 973-473-3794
1.	1.			
2.	2.			
3.	3.	MAT'L:		
4.	4.	SCALE:1/2"=1'-0"	DRAWN BY: D. SURIC	
5.	5.			
6.	6.	DATE:	DRAWING NO.:	

PRE-RINSE
Z842X1-AF
TAG _____

Engineering Specification: Zurn AquaSpec® Z842X1-AF
Polished chrome plated cast brass 8” [203mm] pre-rinse faucet with quarter turn ceramic disc cartridges, 3/8 [10mm] short swivel inlets with check stops providing adjustable centers from 7-1/4” [184mm] to 8-3/4” [222mm] and 2-1/2” [64mm] vandal resistant color-coded metal lever handles. Unit is furnished with a single valve Adapta faucet with a 9-1/2” [241mm] swing spout and single screen outlet, a 24”[610mm] riser with a 36”[914mm] stainless steel spring hose, a 1.6 GPM @ 60 psi (6.1 l/min. @ 400 kPa) self-closing pre-rinse hand held valve with an insulated handle, a stay open clip, a protective bumper spray head, a wall mounted pipe support and a hose hook.

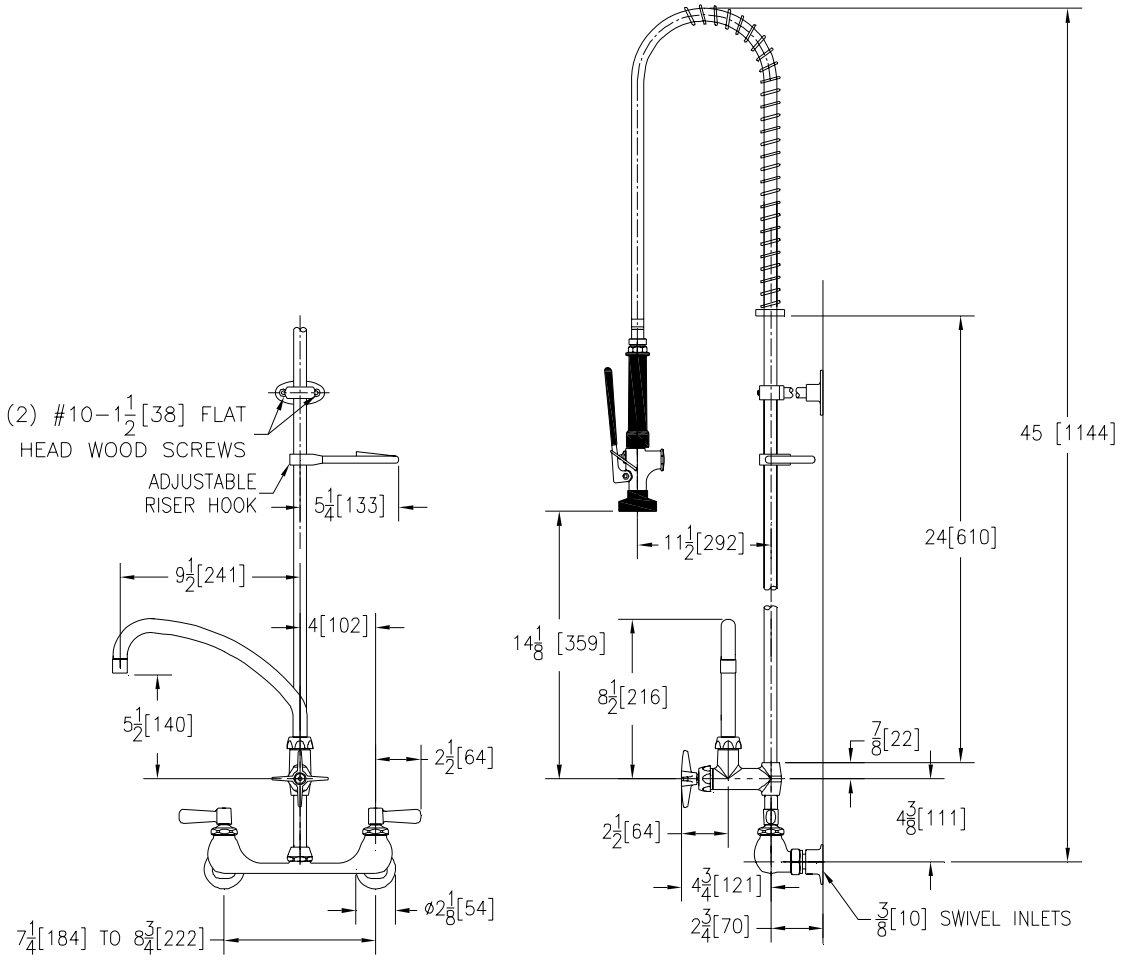

Note: All dimensions are for reference only. Do not use for pre-plumbing.

OPTIONAL ACCESSORIES

Suffix	Description
___ -HCT	Hot/Cold Text Indexes
___ -LSI	2-1/2”[64mm] Long Swivel Inlets with Integral Stops
___ -PR2	Pre-Rinse with Angle Spray Head, Rubber Bumper Spray Outlet and Self-closing Valve
___ -PR3	Pre-Rinse with Angled Aerated Outlet and Self-closing Valve
___ -RC	Rough Chrome Plated

ZURN INDUSTRIES, LLC ♦ COMMERCIAL BRASS OPERATION ♦ 2640 SOUTH WORK STREET ♦ FALCONER NY 14733
Phone: 1-800-997-3876 ♦ Fax: 1-919-775-3541 ♦ www.zurn.com
In Canada: ZURN INDUSTRIES LIMITED ♦ 3544 Nashua Drive ♦ Mississauga, Ontario L4V1L2 ♦ Phone: 905/405-8272 Fax: 905/405-1292

AquaSpec® is a registered trademark of Zurn Industries, LLC
©2011 Zurn Industries, LLC

Rev. i Date: 8/1/11 C.N. No. 128016
Dwg. No. 63533 Product No. Z842X1-AF

Anti-Siphon Wall Faucets

WOODFORD

Model 24/B24/Y24

The Model 24 and B24 are anti-siphon, vacuum breaker protected wall faucets designed for use in mild climate areas. The Model B24 is enclosed in a flush mounted wall box. Both models are designed to blend with modern architecture for installation on or in homes, service stations, churches, motels, drive-in restaurants, etc. The Model Y24 is designed to be used on a stand pipe in the lawn and garden, etc.

SPECIFICATIONS:

VACUUM BREAKER - ANTI-SIPHON:

- NIDEL® Model 34HF with ¾ inch male hose thread
- ASSE Standard 1011 approved
- IAPMO® listed
- Canadian Standards Association

EPDM PACKING: Prevents leaking.

PACKING NUT: Adjustable brass nut with deep stem guard.

VALVE SEAT: Standard "O" size washer.

HANDLES: Furnished with polycarbonate wheel handle and loose tee key.
Optional: Metal wheel handle.

INLETS: Model 24 as shown below.
Model B24: 24P- ½ or 24P ¾ only.
Model Y24: ¾ " FPT.

MAX PRESSURE: 125 p.s.i.

MAX TEMPERATURE: 120° F

SHIPPING WEIGHT: (per unit)
MODEL 24 & Y24: 1 lb
MODEL B24: 13 lbs (brass or chrome box)
6 lbs (aluminum box)

Inlet Descriptions

MODEL 24/B24
P-½ Inlet
½" FPT
P-¾ Inlet
¾" FPT

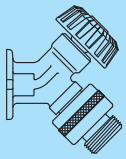

MODEL 24 ONLY
CP Inlet
COMBINATION
½" COPPER TUBE
½" MPT

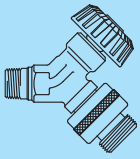

MODEL 24 ONLY
C Inlet
COMBINATION
½" COPPER TUBE
¾" COPPER TUBE

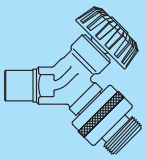

MODEL 24

Exterior Finish:
Standard - Chrome (CH)
Optional- Rough Brass (BR) or Polished Chrome (PC)

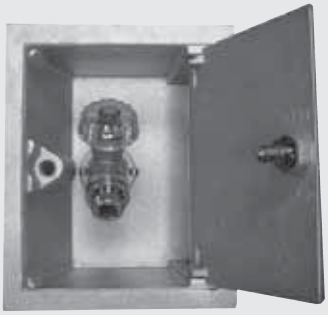

MODEL B24

Exterior Finish:
Standard - Chrome (CH)
Optional- Rough Brass (BR) or Polished Brass (PB)
Other Options: Anodized Aluminum Box (AL)

MODEL Y24

Exterior Finish:
Standard - Chrome (CH)
Optional- Rough Brass (BR) or Polished Chrome (PC)

WOODFORD MFG. CO. 02/84
15p
VALVES

©2007 WOODFORD Mfg.

WOODFORD

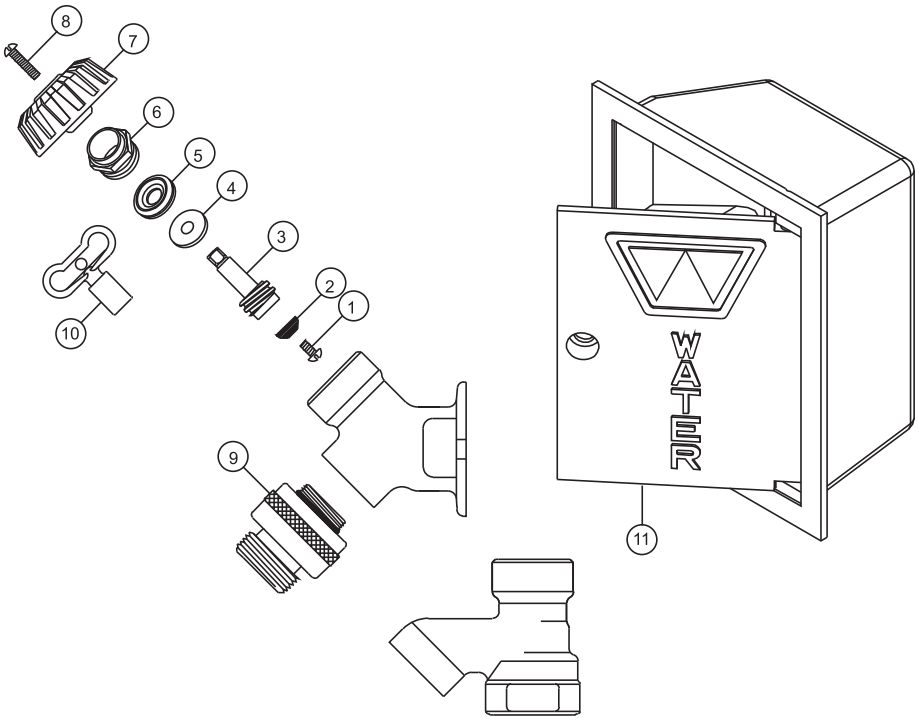

MODEL 24/B24/Y24 PARTS LIST

ITEM	PART#	DESCRIPTION
1	30009	Washer Screw
2	30008	Washer
3	30104	Operating Stem
4	30105	Packing Support Washer
5	30247	EPDM Packing
6	30109	Packing Nut - Chrome
	30107	Packing Nut - Brass
7	30120	Wheel Handle - Clear
	30233	Wheel Handle - Tan
8	30121	Handle Screw - Nickel
	30002	Handle Screw - Brass
9	34HF-CH	34HF Vacuum Breaker - Chrome
	34HF-BR	34HF Vacuum Breaker - Brass
10	RK-STK	Tee Key
11	B24BX	Box/Door Assembly - Chrome
	B24BX-BR	Box/Door Assembly - Brass
	B24BX-PB	Box/Door Assembly - Polished Brass
	B24BX-AL	Box/Door Assembly - Anodized Aluminum
	RK-24	Chrome Repair Kit (Includes items 1-8)
	RK-H34	Brass Repair Kit (Includes items 1-8)

MODEL B24
Rough-In Dimensions

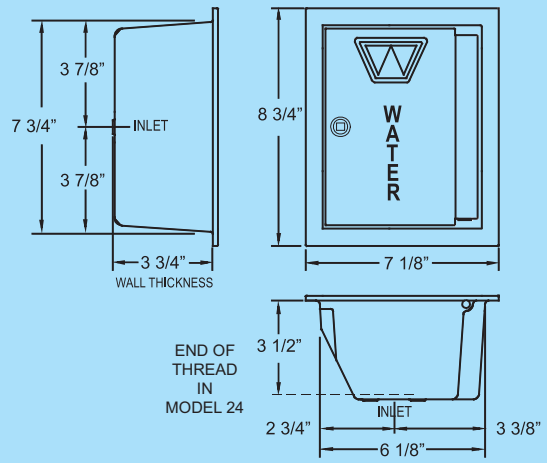

Manufactured under one or more of the following patents: U.S. Patents: 3,414,001; 3,543,786; 4,178,956; 4,316,481; D216,790; D216,791; D277,365; D277,366; Canada Patents: 822,458; 852,529; 865,995

For more information contact...

WOODFORD MANUFACTURING COMPANY

2121 Waynoka Road, Colorado Springs, Colorado 80915 • **Phone:** (800) 621-6032 • **Fax:** (800) 765-4115

To view our complete product line visit: ***www.woodfordmfg.com*** *or email:* ***sales@woodfordmfg.com***

A Division Of WCM Industries, Inc.

Commercial Electric Water Heaters

GOLD SERIES - COMMERCIAL ELECTRIC WATER HEATERS

Designed for use as a recovery heater having its own storage tank. Note: Not recommended for sanitizing water applications.

MODELS DRE-52, 80, 120

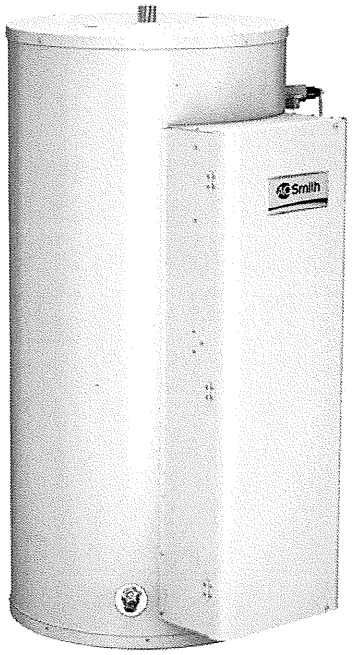

FEATURES

Meets the standby loss requirements of the U. S. Department of Energy and current edition of AHRAE/IESNA 90.1.

GOLD ELEMENTS - DRE models ship with the Goldenrod 24K gold plated elements (see element availability chart on back). Patented Goldenrod elements provide long life and superior scaling resistance. Low watt density means lower surface temperature to minimize scale buildup and more surface to heat water. Goldenrod elements carry a one-year warranty against failure due to lime scale build-up.

GLASSLINED TANK - Three sizes: 50, 80 and 119 gallon capacity. Tank interior is coated with glass specially developed by A. O. Smith for water heater use. Tanks rated at 150 psi (1034 kPa) working pressure (ASME 150 psi). Foam insulation reduces costly heat loss.

FUSING - Protects all elements, thermostats, and internal wiring circuits against excess current flow. Meets National Electrical Code requirements that non-ASME tanks must have internal fusing when current draw exceeds 48 amps. Available as an option on Canadian built heaters.

STANDARD VOLTAGES - 208, 240 and 480V single-phase and three-phase delta. Convertible from three-phase to single-phase (in field) and vice versa. 277V single-phase also available.

TERMINAL BLOCK - Factory installed. Just bring the service to the heater and connect to block.

CONTROLS - One temperature control (adjustable through a range of 120° to 180°F) and manual reset high temperature cut-off per element. Thermostat step control may be achieved by varying settings on individual temperature controls. Located behind hinged control compartment door for quick, easy access.

OTHER STANDARD FEATURES -

☐ Surface mounted thermostats ☐ Simplified circuitry, color coded for ease of service ☐ Two anode rods for maximum corrosion protection ☐ Cabinet has bonderized undercoat with baked enamel finish ☐ Bottom inlet and top outlet openings ☐ Brass drain valve ☐ CSA Certified and ASME rated T&P relief valve ☐ Single panel control box. ☐ THREE YEAR LIMITED TANK WARRANTY - For complete warranty information, consult written warranty.

OPTIONS -

☐ UL and cUL listed conversion kits to adjust voltage and kW requirements in the field before and after installation ☐ ASME 150 psi tank construction ☐ International voltages - 220, 380, 400, 415, 575, and 600 volts, three phase available with Y connected elements ☐ MANIFOLD KITS - for multiple tank installations. Two heaters -part # 9003429205, three heaters- part # 9003430205 and four heaters- part # 9003431205

ANSI/NSF-5

ASME/CRN (OPTIONAL)

HLW

Low Lead Content

Revised October 2012

AOSCE15300

Commercial Electric Water Heaters

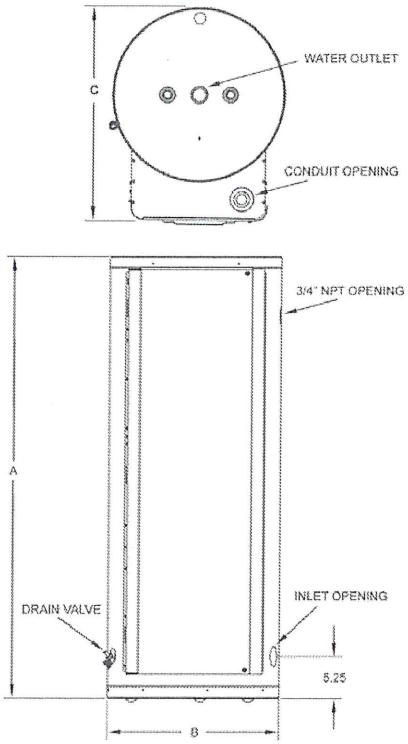

RECOVERY RATE IN GALLONS PER HOUR AT TEMPERATURE RISE OF

Standard kW Input	BTU/ Hour	30°F 17°C	40°F 22°C	50°F 28°C	60°F 33°C	70°F 39°C	80°F 45°C	90°F 50°C	100°F 56°C	110°F 61°C	120°F 67°C	130°F 72°C	140°F 78°C
6	20,478	82 310	62 233	49 166	41 155	35 133	31 116	27 103	25 93	22 85	21 78	19 72	18 66
9	30,717	123 465	92 349	74 279	62 233	53 199	46 174	41 155	37 140	34 127	31 116	28 107	26 100
12	40,956	164 620	123 465	98 372	82 310	70 266	61 233	55 207	49 186	45 169	41 155	38 143	35 133
13.5	46,075	184 698	138 523	111 419	92 349	79 299	69 262	62 233	55 209	50 190	46 174	43 161	40 150
15	51,195	205 775	154 582	123 465	102 388	88 332	77 291	68 258	61 233	56 211	51 194	47 149	44 166
18	61,434	246 930	184 698	148 558	123 465	105 399	92 349	82 310	74 279	67 254	62 233	57 215	53 199
24	81,912	328 1241	246 930	197 744	164 620	140 532	123 465	109 414	98 372	90 338	82 310	76 286	70 266
27	92,151	369 1396	276 1047	221 938	185 609	158 509	138 523	123 465	111 410	101 391	92 340	85 322	79 299
30	102,390	410 1551	307 1163	246 930	205 775	176 665	154 582	137 517	123 465	112 423	102 388	95 358	88 332
36	122,868	492 1861	369 1396	295 1117	246 930	211 798	184 698	164 620	148 556	134 508	123 465	113 429	105 399
40.5	138,226	554 2094	418 1570	332 1256	277 1047	237 897	208 785	185 698	166 628	151 634	138 582	128 537	119 498
45	153,585	615 2326	461 1745	369 1398	307 1163	263 997	230 872	205 755	184 698	168 634	154 582	142 537	132 498
54	184,302	738 2791	554 2094	443 1675	359 1396	316 1196	277 1047	246 930	221 837	201 761	185 696	170 644	158 598

Figured at 1 kW (3413 BTU) = 4.1 Gallons at 100°F temperature rise.

Model Number	Tank Capacity		Dimensions						Inlet/ Outlet (NPT)		Approx. Ship. Wt. (Lbs.)	
			A		B		C					
	gal.	litre	in.	cm	in.	cm	in.	cm	in.	cm	lb	kg
DRE-52	50	189	55 3/4	142	21 3/4	55.2	27	68.6	1 1/4	3.2	265	120
DRE-80	80	300	60 1/4	153	25 1/2	64.8	31	78.7	1 1/4	3.2	280	127
DRE-120	119	450	62 1/4	158.1	29 1/2	75.0	35	88.9	1 1/4	3.2	390	177

kW Input	Model Numbers Tank Capacity in Gallons			Number Of Elements	Element Wattage	Full Load Current In Amperes						
						Single Phase				Three Phase		
	50	80	119			208V	240V	277V	480V	208V	240V	480V
6	DRE-52-6	DRE-80-6	DRE-120-6	3	2,000	28.8	25.0	21.7	12.5	16.7	14.4	7.2
9	DRE-52-9	DRE-80-9	DRE-120-9	3	3,000	43.3	37.5	**32.5	18.8	25.0	21.7	10.8
12	DRE-52-12	DRE-80-12	DRE-120-12	3	4,000	57.7	50.0	43.3	25.0	33.3	28.9	14.4
13.5	DRE-52-13.5	DRE-80-13.5	DRE-120-13.5	3	4,500	64.9	56.3	**48.7	28.1	37.5	32.5	16.2
15	DRE-52-15	DRE-80-15	DRE-120-15	3	5,000	72.1	62.5	**54.2	31.3	41.6	36.1	18.0
18	DRE-52-18	DRE-80-18	DRE-120-18	3*	6,000	86.5	75.0	65.0	37.5	50.0	43.3	21.7
24	DRE-52-24	DRE-80-24	DRE-120-24	6	4,000	115.4	100.0	86.6	50.0	66.6	57.7	28.9
27	DRE-52-27	DRE-80-27	DRE-120-27	6	4,500	129.8	112.5	**97.5	56.3	74.9	65.0	32.5
30	DRE-52-30	DRE-80-30	DRE-120-30	6	5,000	144.2	125.0	**108.3	62.5	83.3	72.2	36.1
36	DRE-52-36	DRE-80-36	DRE-120-36	6	6,000	173.1	150.0	130.0	75.0	99.9	86.6	43.3
40.5	N/A	DRE-80-40.5	DRE-120-40.5	9	4,500	194.7	168.8	**146.2	84.4	112.4	97.4	48.7
45	N/A	DRE-80-45	DRE-120-45	9	5,000	216.3	187.5	**162.5	93.8	124.9	108.3	54.1
54	N/A	DRE-80-54	DRE-120-54	9	6,000	N/A	225.0	194.9	112.5	149.9	129.9	65.0

*208 volt models may contain three (3) additional elements. ** Elements available in incoloy only.

SUGGESTED SPECIFICATION

The heater(s) shall be Gold Series Commercial Electric Model Number _____ as manufactured by A. O. Smith. Heater(s) shall be rated at _____ kW,_____volts, _____ phase, 60 cycle AC, and listed by Underwriters' Laboratories and approved to the NSF Standard 5 by UL. Tank(s) shall be _____ gallon capacity. Tanks shall be 50, 80 and 119 gallon capacity and shall have 150 psi working pressure and be equipped with extruded high density anode. All internal surfaces of the heater(s) exposed to water shall be glasslined with an alkaline borosilicate composition that has been fused-to-steel by firing at a temperature range of 1400°F to 1600°F. Electric heating elements shall be low watt density Goldenrod 1" screw-in type. Each element shall be controlled by an individually mounted thermostat and high temperature cut-off switch. All internal circuits shall be fused. The outer jacket shall be of baked enamel finish and shall be provided with full size control compartment for performance of service and maintenance through hinged front panel and shall enclose the tank with foam insulation. Electrical junction box with heavy duty terminal block shall be provided. The drain valve shall be located in the front for ease of servicing. Heater tank shall have a three year limited warranty as outlined in the written warranty. Manufacturer shall supply ASME rated temperature and pressure relief valve. Fully illustrated instruction manual to be included. Meets standby loss requirements of the U. S. Depatment of Energy and current edition of ASHRAE/IENSA 90.1.

For Technical Information and Automated Fax Service, call 800-527-1953. A. O. Smith Corporation reserves the right to make product changes or improvements without prior notice.

Express Ship™

10 Days or less®

We work very closely with our customers to communicate lead times based on approval of shop drawings, field dimensions, and color selection. We always offer quick turnarounds with our Express Ship program. Our goal is to deliver your compartments where you need them, when you need them. Please call the factory to obtain available colors for quickest turnaround.

Standard Matte Finish Compact Laminate (Phenolic)

Standard Matte Finish Compact Laminate (Phenolic) is water, impact, and wear resistant.

Tan Soapstone 4887-38

Western Suede 4871-60

Fashion Grey D381-60

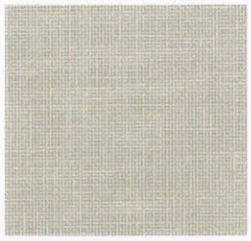
Classic Linen 4943-38

Woolamai Brush 4746-60

Navy Legacy 4651-60

Slate Grey D91-60

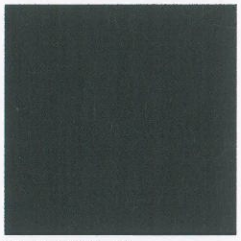
Black 1595-60

Premium Quartz Finish Compact Laminate (Phenolic)

Premium Quartz Finish Compact Laminate (Phenolic) has scratch, scuff and graffiti resistance.

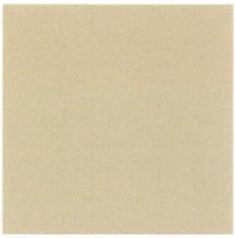
Pure Almond L820QW

Tan Nebula F626QW

Ivory Nebula F607QW

Galaxy Nebula F635QW

This brochure contains digital representations of Wilsonart Brand Products. **Refer to actual samples to confirm your selection**. Wilsonart and Wilsonart logo are registered trademarks of Wilsonart International Holdings LLC. To order samples, call 1.800.433.3222 or order online at www.wilsonart.com.

AMPCO FLORIDA
11400 NW 36th Avenue, Miami, Florida 33167
T. 305.821.5700 F. 866.216.5300 E. florida@ampco.com

AMPCO TEXAS
201 Railroad Avenue, Sanger, Texas 76266
T. 940.458.7401 F. 866.372.5300 E. texas@ampco.com

AMPCO WASHINGTON
4520 B Street NW, Suite B, Auburn, Washington 98001
T. 253.852.5900 F. 253.856.2859 E. washington@ampco.com

Colors may vary from swatches shown. Please contact marketing department for actual samples of color and finish.
Please contact your nearest AMPCO for Pricing. Ampco reserves the right to change, update and alter the standard color selections. Ampco is not responsible for typographical errors. Please refer to website to confirm you have the latest color selector guide.

Manufactured to Ampco's Standard Compact Laminate (Phenolic) Technical Specifications.

Wilsonart

AMPCO PRODUCTS
Phenolic Core Toilet Partitions

Technical Data Sheet

Ampco's solid phenolic compartment systems provide strength, durability and design flexibility. These compartments offer 42 standard color selections and a choice of finishes. For high traffic public buildings, schools and institutional facilities. A virtually indestructible core makes it suitable for wet

Construction Styles

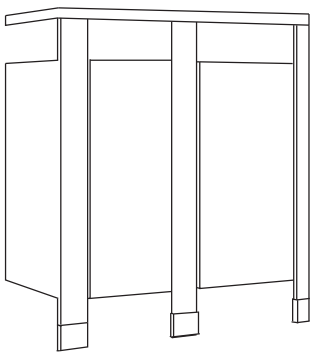

Overhead Braced

LEED CERTIFICATION PROGRAM

Recycled Content MR 4.0	
1-2 points	Formica Pre-Consumer 10% Post-Consumer 15% Wilsonart Pre-Consumer % Post-Consumer 22%
Local and Regional Materials MR 5.0	
1-2 points	Toilet Partition is Manufactured in: Miami FL 33167 Sanger TX 76266 Morristown TN 37814 Auburn WA 98001 Formica phenolic core and laminate Cincinnati OH Sacramento CA St. Jean sur Richelieu Canada Wilsonart phenolic core and laminate Temple TX Asheville NC Recovered Hardware Sanger TX
Renewable Resources MR 6	
1 point	Wilsonart 10%
Certified Wood MR 7	
1 point	Suppliers used by manufacturer are independently certified with the FSC
Low Emitting Materials IEQ 4.4	
1 point	Yes
Regional Priority Credit 1.0	
1-4 Credits	Depending on job site zip code

CONSTRUCTION

Ampco's Solid Phenolic Core High Pressure Decorative Laminate is constructed of melamine face sheets bonded under heat and high pressure phenolic resin with textured finished surfaces that have a minimum Class B fire rating. All edges are polished black. Stiles have a 3/4" minimum thickness, panels 1/2" and doors 3/4".

STANDARD HARDWARE

Heavy duty cast stainless steel door hardware and stamped stainless steel bracket hardware

Hinges:
Our hinges supply heavy duty cast stainless steel Type 304 Number 4 finish. Top hinge consists of heavy-duty nylon bushing mounted to 3/8" stainless steel pin within cast stainless steel sleeve. Bottom hinge consists of a cast cam mechanism within hinge pivot. Stainless steel ball bearing slides to assist with gravity fed pivot function and saddle to mount on bottom of door. Fully adjustable Emergency access feature is required for outside access.

Latch and Keeper:
Type 304 stainless steel with Number 4 finish. Latching device consists of a slide latch with combination stop and emergency release feature

Coat Hook:
Type 304 stainless steel Number 4 finish coat hook for outswing and or combination coat hook and bumper for inswing

Door Pull:
Type 304 cast stainless steel with a Number 4 Finish

OPTIONAL FEATURES

- 1" (25mm) thick stiles
- Class A Fire rating
- Continuous stainless steel hinge or three hinges per door
- Continuous Aluminum adjustable hinge
- Continuous stainless steel or aluminum wall brackets
- Cast chrome plated non-ferrous Zamac hardware
- Ameriline no-sight line hardware with continuous hinge and strike
- Euroline hardware

COLORS AVAILABLE

Over 42 standard colors available. For more information request Phenolic Color Chart

Our Phenolic Core Toilet Partitions comply with CID A-A-60003

* Solid Phenolic Core toilet partitions are assembled with 85% Phenolic core and 15% Stainless Steel hardware by weight
For samples or color chips please contact the marketing department.

Please Note: Asbestos is not a listed substance material in the Formica and Wilsonart MSDS.

Ampco is not responsible for any typographical errors

AMPCO PRODUCTS
Solid Phenolic Core Toilet Partitions

PART 1 - GENERAL

1.1 RELATED DOCUMENTS

A. Drawings and General Provisions of Contract, including General and Supplementary Conditions and Division 1 Specification Sections, apply to this Section.

1.2 SUMMARY

A. This section includes stock and manufactured toilet compartments.

B. Types of toilet compartments include:
1. Solid Phenolic Core

C. Construction styles of toilet compartments include:
1. Ceiling Hung
2. Floor Mounted
3. Floor to Ceiling Supported
4. Overhead Braced

D. Construction styles of modesty panels and sight screens include:
1. Leg Screen
2. Floor Mounted
3. Floor to Ceiling Supported
4. Wall Hung

E. Supports for attaching compartments, modesty panels and sight screens to overhead structural systems are specified in a Division 5 Section.

1.3 SUBMITTALS

A. General: Submit the following in accordance with Conditions of Contract and Division 1 Specification sections.

B. Product data for materials, fabrication, and installation including catalog cuts of anchors, hardware, fastenings, and accessories.

C. Shop drawings for fabrication and installation of compartment assemblies that are not fully described by architectural drawings. Provide template layouts and installation instructions for anchorage devices built into other work.

D. Samples of full color range for each required unit type. Submit Ampco's standard color selector.

1.4 QUALITY ASSURANCE

A. Field Measurements: Take field measurements prior to component fabrication to ensure proper fitting of work.

B. Coordination: Furnish inserts and anchorages that must be built into other work for installation of toilet compartments and related items.

PART 2 -PRODUCTS

2.1 MANUFACTURERS:

Subject to compliance with requirements, provide products by one of the following:

A. Ampco Florida, Miami, FL 33167. (305) 821-5700.

B. Ampco Texas, Sanger, TX 76266. (940) 458-7401.

C. Ampco Washington, Auburn, WA 98001. (253) 852-5900.

D. Ampco Tennessee, Morristown, TN 37814. (423) 586-3993.

2.2 MATERIALS

A. General: Provide material that have been selected for surface flatness and smoothness. Exposed surfaces that exhibit pitting, seam marks, roller marks, stains, discoloration, telegraphing of core, or other imperfections on finished units are not acceptable.

B. Select from the following:
1. Solid Phenolic Core: Ampco's Solid Phenolic Core High Pressure Decorative Laminate with textured finished surfaces shall have a minimum Class B fire rating. All edges shall be polished black. Stiles have a 3/4" minimum thickness, panels 1/2", and doors 3/4".

C. Stile Shoes and Caps: Shall be 20 gage ASTM A-167, Type 304 stainless steel, not less than 3" high, Number 4 Satin (brushed) finish.

D. Brackets: Ampco's standard design for attaching panels to walls, stiles to walls, and panels to stiles of the following material:
1. Solid Phenolic Core shall be Type 304 stainless steel with Number 4 Satin finish hardware.

E. Overhead Bracing: Continuous extruded aluminum, anti-grip profile, with clear satin anodized finish. Headrail returns as shown on shop drawings.

F. Anchorages and Fasteners: Stainless steel exposed fasteners are finished to match hardware with theft-resistant type heads (one-way). All concealed steel fasteners shall have a zinc-plated, rust-resistant, protective coating. All fasteners shall be pre-packed, marked and labeled for ease of identification.

2.3 FABRICATION

A. General: Furnish standard doors, panels, screens and stiles fabricated for compartment system. Furnish units with cutouts and drilled holes to receive compartment hardware as indicated.

B. Door Dimensions: Unless otherwise indicated, furnish 24" wide in-swing doors for ordinary toilet compartments and minimum 32" wide (clear opening) out-swing doors for compartments that meet the requirements of the Americans with Disabilities Act (ADA).

C. Restroom Compartments, Modesty Panels and Sight Screens:
1. Solid Phenolic Core: One-piece melamine face sheets are bonded under heat and high pressure to phenolic resin impregnated kraft sheets. All exposed edge components shall be polished black, chamfered and free of milling marks. Material shall meet Class B fire rating.

D. Construction Types of Restroom Compartments, Modesty Panels and Sight Screens:
1. Overhead Braced: Furnish galvanized steel supports and leveling bolts at stiles to suit floor conditions as recommended by Ampco. Make provisions for setting and securing overhead bracing at the top of each stile. Provide shoe at each stile to conceal supports and leveling mechanism.
2. Floor Mounted: Furnish galvanized steel anchorage devices complete with threaded rod, lock washers, and leveling adjustment nuts at stiles to permit structural connection at floor. Provide shoe at each stile.
3. Ceiling Hung: Furnish galvanized steel anchorage devices complete with threaded rods, lock washers, and leveling adjustment nuts at stile connection for structural support above finished ceiling. Furnish devices that are designed to support stiles from structure without transmitting load to finished ceiling. Provide shoe at each stile to conceal anchorages. Ceiling hung compartments are offered to a maximum ceiling height of 10 feet.
4. Floor to Ceiling: Furnish galvanized steel supports and/or threaded rod, lock washers, and leveling adjustment nuts at stiles as required. Provide shoes at each stile to conceal anchorages.

E. Hardware: Furnish hardware to comply with ANSI A117.1 and Title III of the Americans with Disabilities Act (ADA) as follows:
1. Solid Phenolic Core:
a. Hinges: Supply minimum two heavy duty cast stainless steel Type 304 Number 4 finish. Top hinge consists of heavy-duty nylon bushing mounted to 3/8" stainless steel pin within cast stainless steel sleeve. Botton hinge consists of a cast cam mechanism within hinge pivot. Stainless steel ball bearing slides to assist with gravity fed pivot function and saddle to mount on bottom of door. Emergency access feature is required for outside access.
b. Latch and Keeper: Type 304 stainless steel with Number 4 finish. Latching device shall consist of a slide latch with combination stop and emergency release feature.
c. Coat Hook: Type 304 stainless steel with Number 4 finish coat hook (O/S) and/or combination coat hook and door bumper (I/S).
d. Door Pull: Type 304 cast stainless steel with a Number 4 finish.

2.4 FINISH. Select color from Ampco's most recent selection chart. Finalize selection from actual material sample provided by manufacturer.

PART 3 -EXECUTION

3.1 INSTALLATION

A. General: Comply with manufacturer's recommended procedures and installation sequence. Install compartment units rigid, straight, plum and level. Provide clearance of not more than 1/2" between stiles and panels and not more than 1" between panels and walls. Secure panels to walls with not less than two brackets attached near top and bottom of panel. Locate wall brackets so that holes for wall anchorages occur in masonry or tile joints. Secure panels to stiles with not less than two brackets located to align with brackets at wall. Secure panels in position with manufacturer's recommended anchoring devices.

B. Overhead Braced Compartments: Secure stile to floor and level, plumb, and tighten installation with devices furnished. Secure overhead brace to each stile with fasteners supplied. Hang doors and adjust so that tops of doors are parallel with overhead brace when doors are in closed position.

C. Floor Mounted Compartments: Set stile units with anchorages having not less than 2" penetration into structural floor, unless otherwise recommended by Ampco.
Level, plumb, and tighten installation with devices furnished. Hang doors and adjust so that tops of doors are level with tops of stiles when doors are in closed position.

D. Ceiling Hung Compartments: Secure stiles to supporting structure and level, plumb and tighten installation with devices furnished. Hang doors and adjust so door bottoms are level with bottoms of stiles when doors are in closed position.

E. Floor to Ceiling Compartments: Secure divider panels to built-in anchorage devices using concealed fasteners. Level, plumb and tighten installation with device furnished.
Hang doors and adjust so that bottoms of doors are 12" off floor when doors are in closed position.

F. Screens: Attach with anchoring devices as recommended by manufacturer to suit supporting structure. Set unit to provide support and to resist lateral impact.

3.2 ADJUST AND CLEAN

A. Hardware Adjustment: Adjust and lubricate hardware for proper operation. Set hinges on in-swing doors to hold open approximately 30 degrees from closed position when unlatched. Set hinges on out-swing doors (and entrance swing doors) to return to fully closed position.

B. Clean and Protect: Clean exposed surfaces of compartment systems using materials and methods recommended by manufacturer, and provide protection as necessary to prevent damage during remainder of construction period.

FLORIDA
11400 NW 36th Avenue, Miami, Florida 33167
P. 305/821-5700 F. 866/216-5300 email: florida@ampco.com
TENNESSEE
1200 Violet Street, Morristown, Tennessee 37814
P. 423/586-3993 F. 866/902-5370 email: tennessee@ampco.com
TEXAS
201 Railroad Avenue, Sanger, Texas 76266
P. 940/458-7401 F. 866/372-5300 email: texas@ampco.com
WASHINGTON
4520 B Street NW, Suite B, Auburn, Washington 98001
P. 253/852-5900 F. 866/323-5300 email: washington@ampco.com

TCP

LED – a smooth move for Exit Combination Signs

LED

EXIT COMBINATION SIGN

Smooth Performance

- First unit of its kind in the market place
- Uniform lighting (no shadows in the face plate)
- 25,000 hour LED rated life
- Damp Location rated

Notable Savings

- Energy Efficient –
  Consumes less than 1 watt in energy!
- Annual savings of $3.15 in operating costs per unit!
- Saves on shipping costs
  Sleek compact size costs less to ship

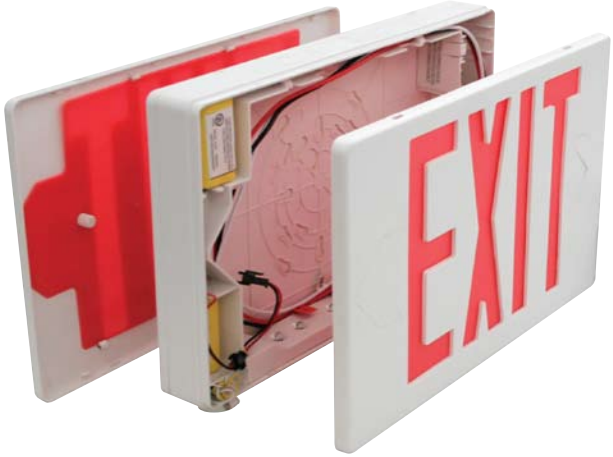

To learn more, please contact your local TCP sales representative, or TCP distributor.

TCP, Inc.
325 Campus Dr. | Aurora, Ohio 44202 | P: 800-324-1496 | F: 330-995-6188 | tcpi.com
©TCP, Inc. 2010/42970

TCP is proud to have been awarded ENERGY STAR® Partner of the Year 2010.

ENERGY STAR AWARD 2010
PARTNER OF THE YEAR

Sleek Compact Size Saves on Shipping Costs

- Only 20% the size of standard combination units.
- Typical cost to ship a TCP 20784 cross country is $14.00
- Cost to ship the new **20684 LED** combination unit cross country is only **$10.00**
- Savings of $4.00 per fixture.
  Average job uses 36 units = **savings of $144 in shipping costs alone!**

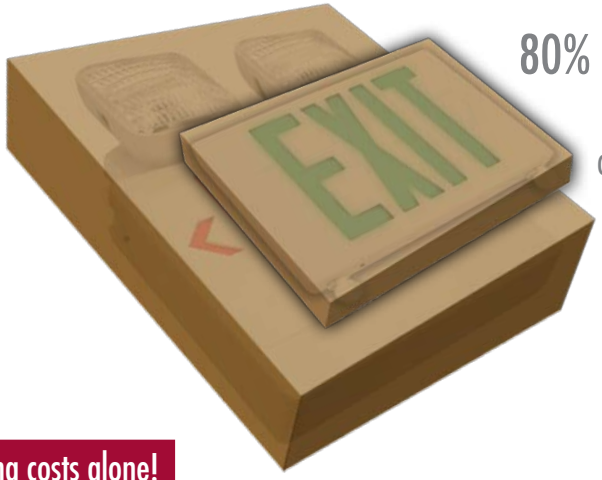

80% SMALLER
than Standard
Exit & Emergency
Combination Signs

Energy Savings mode

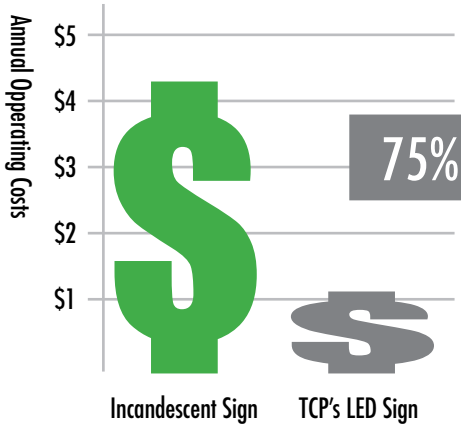

75% Energy Savings
Over Standard
Exit & Emergency
Combination Signs

Existing LED Exits with Incandescent Emegency Lights - Combination Unit										
# of Signs		Watts per Sign		Hours per Year				Rate per kWh		Annual Operating Cost
1	x	4	x	8760	÷	1000	x	0.12	=	$4.20
LED Exit & Emergency Combination Unit										
# of Signs		Watts per Sign		Hours per Year				Rate per kWh		Annual Operating Cost
1	x	1	x	8760	÷	1000	x	0.12	=	$1.05

Estimated Savings from Converting to TCP's LED Combination Units				
Existing Exit Signs Annual Operating Costs		TCP's LED Exit Signs' Operating Cost		Annual Savings
$4.20	-	$1.05	=	$3.15

TCP, Inc.
325 Campus Dr. | Aurora, Ohio 44202 | P: 800-324-1496 | F: 330-995-6188 | tcpi.com
©TCP, Inc. 2010/42970

Energy Usage during Emergency operation:

- TCP's 20784 with sealed lead acid battery consumes 15 watts in emergency mode.
- TCP's 20684 with nickel cadmium battery consumes 3 watts in emergency mode.
- Total battery consumption is less in NEW LED Combination Unit
- LED heads provide 320° rotation and a tilt up to 60°
- First Combination Sign to utilize 100% solid state circuitry – less than 1 watt

LED heads provide 320º rotation and tilt up to 60º

Specifications

Dimensions	12.25″ wide x 7.5″ high x 1.75″ deep
Weigh	3 lbs.
Material	High Impact Thermal Plstic UL94-5V rated
Operating Voltage	120/277 volt (dual voltage)
Charge Circuit	Automatic Solid State Electronic
Maximum Input Wattage	Less than 1 watt*
Input Line Frequency	50/60 hz
Exit Sign Lamps	Long Life, high efficiency LED
Emergency Lamps	Long Life, high efficiency White LED
Emergency Lamp Rotation	greater than 300º
Emergency Lamp Angle	adjustable tilt to 60º
Battery back-up	High Capacity Ni-Cad
UL	Yes, UL 924 Listed

Meets and exceeds NFPA Life Safety Code 101

**Less than 1 watt even when in charging mode.*

TCP is proud to have been awarded ENERGY STAR® Partner of the Year 2010.

ENERGY STAR AWARD 2010
PARTNER OF THE YEAR

LED Combination Unit

Exit/Emergency Sign Combo with LED Heads

Damp Location

Catalog Number	
Notes	Type

Features and Benefits:

- 120/277 VAC operation
- Slim, sleek design offering Top, side or back mounting
- Housing installs to a canopy using easy snap installation
- Only 20% the size of traditional combination units. Saves on storage and shipping costs.
- Maintenance Free Ni-Cd Battery Back up delivers 90 minute capacity to emergency LED heads. Ni-Cd battery provides and estimated service life of 10 years with an operating temperature of 32º to 100º F
- Green or Red LEDs reduce power consumption to <1 watt, representing an 80% energy savings over traditional exit and emergency combination units.
- Faceplate is evenly illuminated with no shadows or hot spots. Letters are 6" high and 3/4 stroke.
- Two super bright, high power LED heads swivel 320º to provide flexibility and light where desired.
- Test switch and red indicator LED to provide both a visual and manual means to monitor the system operation.
- Adjustable heads meet Life Safety Code requirement at 0.1FC
- Thermoplastic housing resists impact, scratches and corrosion with an UL94-5VO flame rating.
- UL 924 Listed

Dimensions:

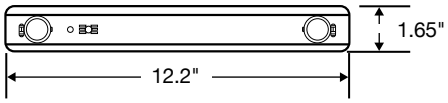

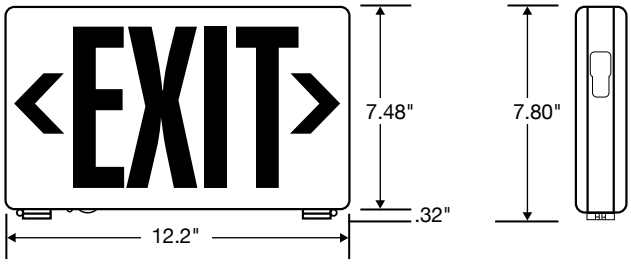

Photometrics:

Maximum Intensity = 893
Degrees = 0

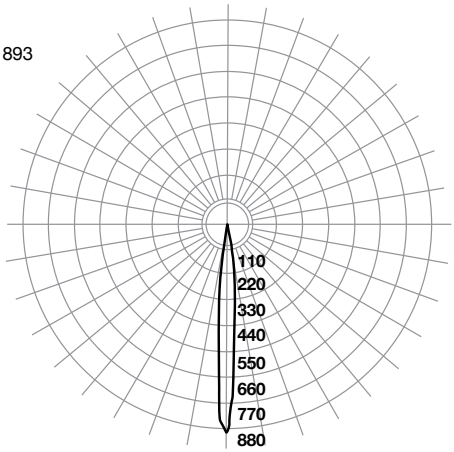

Warranties & Compliances:	Item #	Description
	Ordering Information:	
UL US / NFPA NATIONAL FIRE PROTECTION ASSN.	20684	2 LED Headed Adjustable Exit/Emergency Combo Red Letters White Housing
	20685	2 LED Headed Adjustable Exit/Emergency Combo Green Letters White Housing
Unit: 5 YEAR WARRANTY	Item #	Description
	Accessories:	
Nickel Cadmium: 5 YEAR WARRANTY	29999LEDR	Red Diffuser
	29999LEDG	Green Diffuser
	207B4	Replacement Battery Ni-Cd 8.7V
LED Strip: 25 YEAR WARRANTY	20703	Replacement White Canopy
	207WG	Wire Guard for Exit Sign

TCP, Inc.
325 Campus Dr. | Aurora, Ohio 44202 | P: 1-800-324-1496 | F: 330-995-6188 | tcpi.com

©TCP, Inc. MAY 2010/42919

TCP is proud to have been awarded ENERGY STAR® Partner of the Year 2010.

ENERGY STAR AWARD 2010
PARTNER OF THE YEAR

LITHONIA LIGHTING®

Catalog Number	
Notes	Type

Outdoor General Purpose

Mini-Wall Pack

Dusk-to-Dawn

Compact Fluorescent

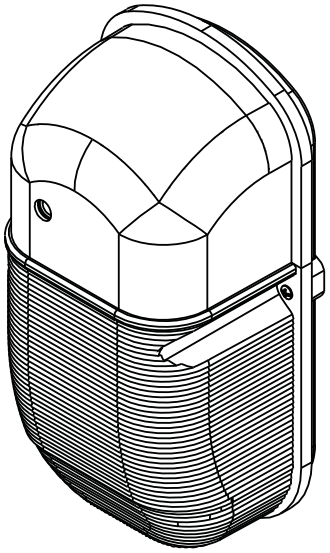

FEATURES & SPECIFICATIONS

INTENDED USE

Provides general illumination for outdoor use in residential and light commercial applications. Ideal for entryways, walkways, side yards, patios, and commercial buildings creating an inviting exterior space as well as providing safety and security.

ATTRIBUTES

Dusk-to-dawn photocell automatically turns on at dusk and off at dawn for convenience and energy savings. The durable polycarbonate housing is offered in bronze or white. High-impact polycarbonate refractor is UV-stablized to prevent yellowing.

Standard with electronic ballast (120 volt, 60 Hz). Starts instantly down to -13°F (-26°C).

Includes (1) 42W GX24q 4-pin base 4100K triple tube compact fluorescent lamp.

For use with non-dimmable switches only.

All mounting hardware included.

LISTING

CUL listed to US and Canadian safety standards and suitable for wet locations. ENERGY STAR® qualified.

WARRANTY

Guaranteed for two years against mechanical defects in manufacture. (Excludes lamp)

DIMENSIONS

Lamp Configuration	Model Number	Number of Lamps	(A) Width inches (cm)	(B) Height inches (cm)	(C) Extension* inches (cm)
	OWP3 42F	(1) 42W GX24q 4-pin base compact (TTT)	5-3/4" (14.6)	11" (27.9)	4-15/16" (10.9)

* Maxium extension from wall

All dimensions are in inches (centimeters)

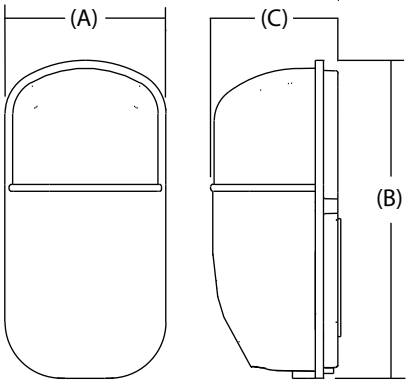

ORDERING INFORMATION

Example: **OWP3 42F 120 P LP BZ**

Choose the boldface catalog nomenclature that best suits your needs and write it on the appropriate line. Order accessories as and replacement parts separate catalog numbers.

OWP3 42F — Model Number

OWP3 42F (1) 42W GX24q 4-pin 4100K triple tube compact fluorscent lamp **Included**

120 — Ballast/Voltage

120 120 volt residential electronic ballast (standard)

P — Features

P Dusk-to-Dawn photocell

LP — Lamp

LP Lamp included

Finish

BZ Bronze
WH White

Accessories/Replacement parts

CF42TRT41 4-PIN M6 42W GX24q 4-pin 4100K triple tube compact fluorescent lamp

PHOTOMETRICS

CANDELA DISTRIBUTION

	0	45	90	135	180	Ave	Lumens
0	110	110	110	110	110	110	
5	124	120	114	106	102	114	11
15	150	152	131	90	67	121	34
25	176	185	145	67	33	125	58
35	202	215	160	43	18	132	83
45	230	240	181	25	11	141	110
55	268	261	209	14	8	155	139
65	301	278	235	9	5	169	168
75	324	289	258	7	1	181	191
85	333	294	273	7	1	187	204
90	329	294	277	7	1	188	
95	319	287	279	9	1	185	202
105	289	263	267	15	0	172	182
115	244	219	231	19	0	146	145
125	190	156	169	11	0	107	96
135	110	105	93	9	0	64	51
145	70	90	63	14	0	51	32
155	64	71	48	13	0	41	19
165	37	34	26	11	2	23	7
175	0	2	9	6	0	4	1
180	0	0	0	0	0	0	

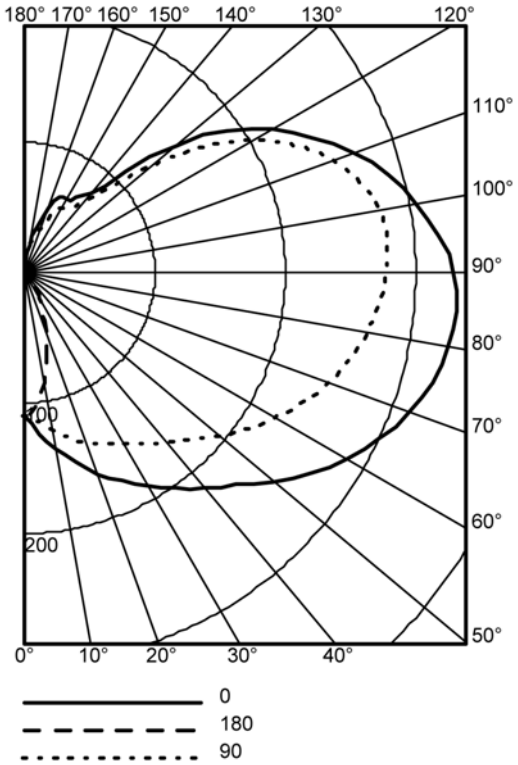

ZONAL LUMEN SUMMARY

Zone	Lumens	% Lamp	% Fixture
0° - 30°	103.4	3.2	6.0
0° - 40°	186.5	5.8	10.8
0° - 60°	435.2	13.6	25.1
0° - 90°	997.8	31.2	57.6
90° - 120°	527.8	16.5	30.5
90° - 130°	623.4	19.5	36.0
90° - 150°	706.4	22.1	40.8
90° - 180°	733.2	22.9	42.4
0° - 180°	1731.0	54.1	100.0

LUMINAIRE EFFICIENCY: 54.1%

CIE CLASSIFICATION: General Diffuse

SPACING CRITERIA(0-Deg): 2.7
SPACING CRITERIA(90-Deg): 2.3
SPACING CRITERIA(180-Deg): 0.6

SINGLE LUMINAIRE PERFORMANCE

Task Height: 2.5ft.

		50% beam - 85.5°		10% beam - 132.6°	
Mounting Height	Inital FC Center Beam	Diameter	FC	Diameter	FC
8.0	3.6	10.2	1.8	25.1	0.4
10.0	2.0	13.9	1.0	34.2	0.2
12.0	1.2	17.6	0.6	43.3	0.1
14.0	0.8	21.3	0.4	52.4	0.1
16.0	0.6	25.0	0.3	61.5	0.1

COEFFICIENTS OF UTILIZATION

pf	20%														
pc	80%				50%			30%			10%			0%
pw	70%	50%	30%	10%	50%	30%	10%	50%	30%	10%	50%	30%	10%	0%
0	59	59	59	59	47	47	47	40	40	40	34	34	34	31
1	51	47	44	41	37	35	32	31	29	27	25	24	23	20
2	45	39	35	31	31	27	25	25	23	21	20	19	17	14
3	40	34	28	24	26	22	19	22	19	16	17	15	13	11
4	37	29	24	20	23	19	16	19	16	13	15	13	11	08
5	33	26	20	17	20	16	13	16	13	11	13	11	09	07
6	31	23	18	14	18	14	11	15	12	09	12	09	07	06
7	28	20	15	12	16	12	10	13	10	08	11	08	06	05
8	26	18	14	10	14	11	08	12	09	07	10	07	06	04
9	24	17	12	09	13	10	07	11	08	06	09	07	05	04
10	23	15	11	08	12	09	06	10	07	05	08	06	04	03

AVERAGE LUMINANCE (cd/m2)

	0°	90°	180°
45°	14146	13278	677
55°	15808	15026	472
65°	17570	17074	292
75°	19297	19544	60
85°	20893	22310	63

Calculations based on IES File Luminous Area:
3.96 in. W x 3.0 in. L x 6.0 in. H

Consumer Products
One Lithonia Way, Conyers, GA 30012
Phone: 800-748-5070 Fax: 770-860-3903
In Canada: 160 Avenue Labrosse, Point-Claire, P.Q., H9R 1A1
www.lightahome.com

©2009 Acuity Brands Lighting, Inc.

LITHONIA LIGHTING®

Catalog Number
Notes
Type

Narrow-Basket Wraps

FEATURES & SPECIFICATIONS

INTENDED USE

For applications that require general illumination from surface-mounted fixture. Provides high light levels for storage rooms, offices or retail applications. **Certain airborne contaminants can diminish integrity of acrylic.** Click here for Acrylic Environmental Compatibility table for suitable uses.

ATTRIBUTES

Linear side prisms control brightness, pyramidal bottom prisms minimize lamp image. Diffuser hinges open from either side for easy maintenance. Full depth, white enamel end plates.

CONSTRUCTION

Die-formed from Code gauge cold-rolled steel. Channel cover snaps into place without the use of tools. Full end cap factory installed to reduce job site labor. Diffuser is extruded clear acrylic.

FINISH

Five-stage iron-phosphate pretreatment ensures superior paint adhesion and rust resistance. Finished with high-gloss, baked white enamel.

ELECTRICAL SYSTEM

Thermally protected, resetting, Class P, HPF, UL listed, CSA Certified ballast is standard. Energy saving and electronic ballasts are sound rated A.

Luminaire is suitable for damp locations. AWM, TFN or THHN wire used throughout, rated for required temperatures.

120V ballasts are ENERGY STAR® qualified FCC Class B for residential and commercial applications. Less than 10% THD. Quieter applications.

MVOLT ballasts are NEMA Premium®/CEE qualified ballasts. Full light output - reduced energy. Less than 10% THD. Multi-volt operation, 120-277V.

INSTALLATION

Intended for surface mounting, unit installation.

LISTING

UL and C-UL Listed.

WARRANTY

Fixtures, including ballasts, are covered by Lithonia Lighting 24-month warranty against mechanical defects in manufacture.

Note: Specifications subject to change without notice.

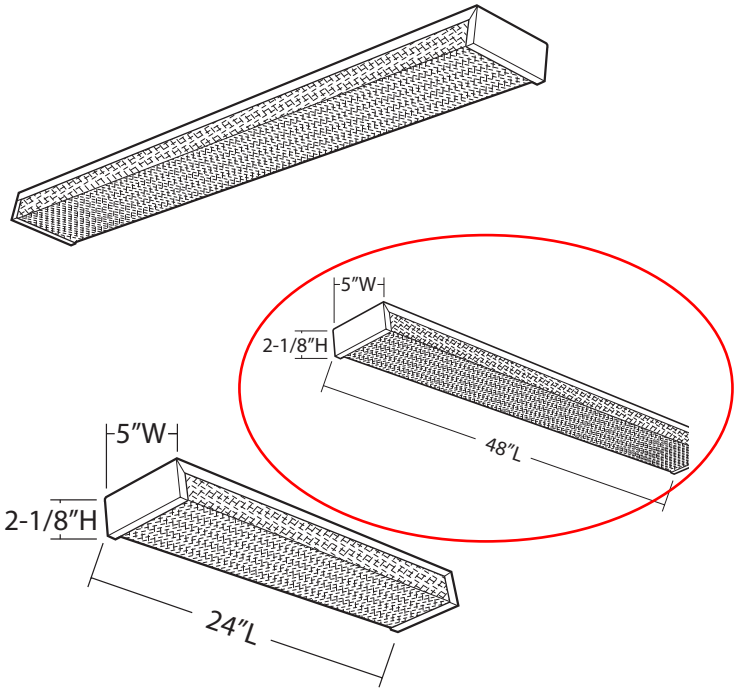

ORDERING INFORMATION

Catalog Number	UPC	Description	# of Lamps	# of Ballasts	Wattage	Ballast Voltage	Ballast Type	ENERGY STAR Qualified	Lamp Included	Pallet Qty.	Standard Carton Qty.
RB232	745973790076	Wraparound	2	1	32	120	Electronic, instant start	Y	N	144	1
RB217	745976023065	Wraparound	2	1	17	120	Electronic, instant start	Y	N	288	1
RB232MV	745975747092	Wraparound	2	1	32	MVOLT	Electronic, instant start	N	N	144	1
RB217MV	745976984540	Wraparound	2	1	17	MVOLT	Electronic, instant start	N	N	288	1

PRODUCT SPECIFICATIONS / INFO

Color: White

ODC0S-I1W

Description

1000W INC 1000VA FL, 120 Volt AC 60Hz, PIR, 360 Degree, 530 Sq. Ft. Coverage, Ceiling Mount Self-Contained Occupancy Sensor, Commercial Grade - White.

Product Features

Sensor Type:	PIR
Adjustment:	Manual
Sensor Technology:	Passive Infrared
Pattern Degrees:	360
Coverage Range Sq. Ft.:	530
Manual Time Adjustment:	20s-15m
Load Rating:	1000W INC 1000VA FL
Input Voltage:	120 Volt AC 60Hz
Photo Cell:	Ambient Override ON
Feature:	Self-Contained
Color:	White
Standards and Certifications:	UL/CSA
Warranty:	5-Year Limited
Code Compliance:	California Title 24

Control Specifications	
Adjustment	Manual
Manual Time Adjustment	20s-15m

Material Specifications	
Color	White

Standards and Certifications	
Code Compliance	California Title 24

Electrical Specifications	
Input Voltage	120 Volt AC 60Hz
Load Rating	1000W INC 1000VA FL

Mechanical Specifications	
Sensor Technology	Passive Infrared
Pattern Degrees	360
Coverage Range Sq. Ft.	530
Photo Cell	Ambient Override ON
Feature	Self-Contained

Field of View (in feet)

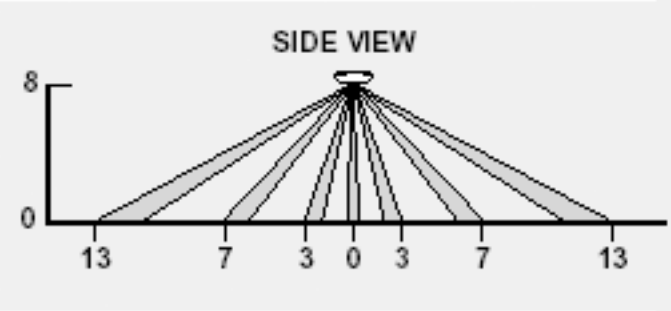

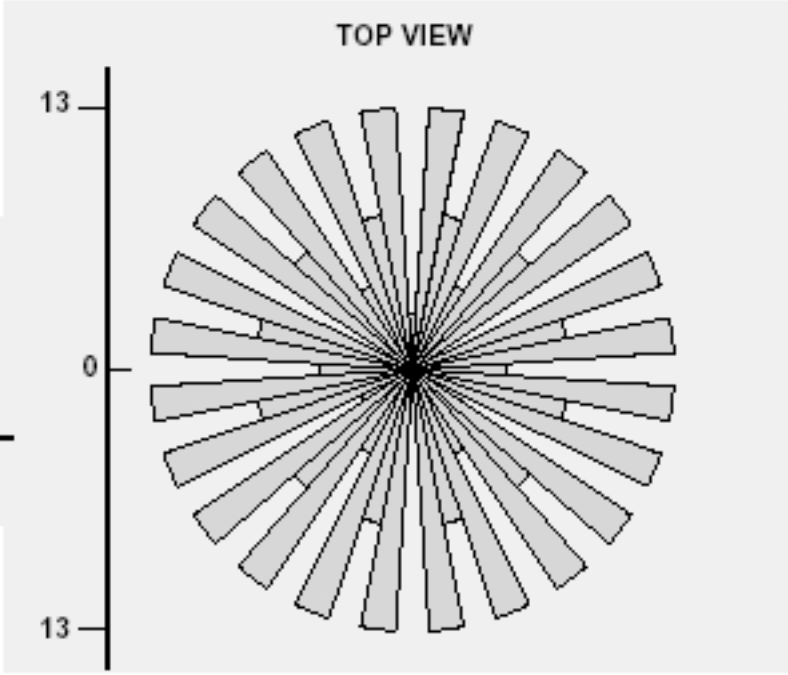

SPECIFICATION SUBMITTAL

JOB NAME:	CATALOG NUMBERS:	
JOB NUMBER:		

Leviton Manufacturing Co., Inc.
59-25 Little Neck Parkway, Little Neck, NY 11362-2591
Telephone: 1-800-323-8920 · FAX: 1-800-832-9538 · Tech Line (8:30AM-7:30PM E.S.T. Monday-Friday): 1-800-824-3005

Leviton Manufacturing of Canada, Ltd.
165 Hymus Boulevard, Pointe Claire, Quebec H9R 1E9 · Telephone: 1-800-469-7890 · FAX: 1-800-824-3005

Leviton S. de R.L. de C.V.
Lago Tana 43, Mexico DF, Mexico CP 11290 · Tel.: (+52)55-5082-1040 · FAX: (+52)5386-1797 · www.leviton.com.mx

Visit our Website at: www.leviton.com
©2007 Leviton Manufacturing Co., Inc. All rights reserved. Subject to change without notice.

Features, Benefits and Functions

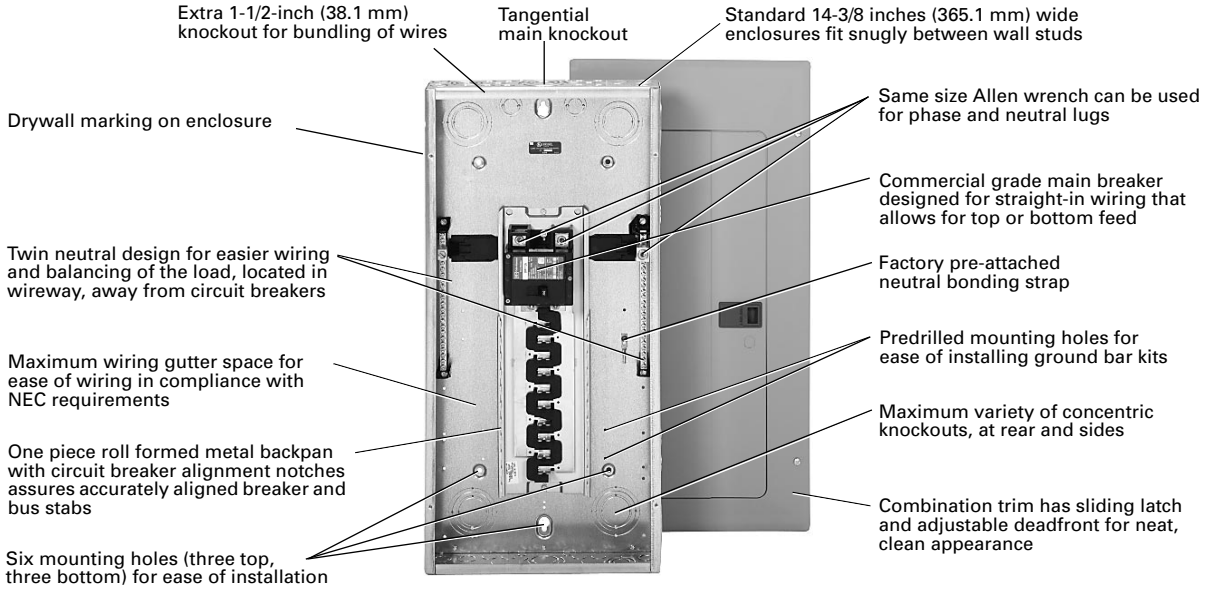

BR2040B200

Product Selection

Table 3-64. BR Loadcenter Selection Chart

Service	■ Single-phase, three-wire, 120/240V AC	■ Three-phase, four-wire, 208Y/120V AC ■ Three-phase, three-wire, 240V AC delta
Short Circuit Current Rating	■ 10,000 AIC: All single- and three-phase loadcenters 70 through 225 amperes, 8 to 42 circuits. ■ 22,000 AIC: All convertible loadcenters using 125 amperes rated Type BRH main breakers or selected factory installed 125 ampere rated Type BRH main breaker.	■ 25,000 AIC: All convertible and factory installed single-phase loadcenters rated 150 and 200 amperes using Type BWH main breakers.
Main Breaker/Main Lug Loadcenters	Single-Phase ■ Main Breaker: 100, 125, 150, 200, 225, 400, 600 amperes. ■ Main Lugs: 70, 125, 150, 200, 225, 400, 600 amperes.	Three-Phase ■ Main Breaker: 100, 125, 150, 200, 225, 400, 600 amperes. ■ Main Lugs: 100, 125, 150, 200, 225, 400, 600 amperes.
Convertible Loadcenters	■ Main Breaker: Single-phase up to 200 amperes and three-phase up to 225 amperes ■ Main Lugs: Single-phase up to 200 amperes and three-phase up to 150 amperes	
Branch Breakers	■ Types BR, BRH, and BRH: 10 to 125 amperes. One-, two-, and three-pole. Selected amperages available in switching duty, HACR, shunt trip, and high magnetic setting. ■ Type GFCB: 15 to 50 amperes. One- and two-pole ground fault breakers. ■ Types BJ, and BJH: 125 to 225 amperes Two- and three-pole. ■ Type BD Twin: 10 to 50 amperes Two of one-pole. Take one 1-inch (25.4 mm) space.	■ Type BQ and BQC Multibreaker: 15 to 30 amperes. Two of two-pole or one two-pole and two one-pole. Takes two 1-inch (25.4 mm) spaces. ■ Type BRW: 15 to 30 amperes. Two-pole water heater breakers. ■ Type BRSN: 15 to 30 amperes. Two-pole switching neutral breakers. ■ Type BR 15 to 100 amperes. Two-pole, 240V AC delta breakers. ■ BR-AFCI arc fault circuit interrupter.
Enclosures	■ NEMA Type 1 indoor. ■ NEMA Type 3R outdoor.	■ Meets or exceeds UL requirements for indoor or outdoor applications
Loadcenter and Breaker Accessories	■ Branch Circuit Breaker Auxiliary components. Hold Down Kits. Handle ties. Lockoffs. Lockdogs. ■ Complete Line of Ground Bar Kits 5, 10, 14, and 21 circuit, some with additional #2/0 lugs. Each terminal will accommodate: (3) #14 – #10 Cu/Al or (1) #14 – #4 Cu/Al ■ Main and Sub-feed Lugs 125, 150, 225 amperes — two- and three-pole. ■ Shunt Trips	■ Surge Protection Single-phase plug-on surge protector. Single-phase bottle type surge protector. Three-phase bottle type surge protector. Single-phase whole home surge protector. ■ Universal Rainproof Conduit Hubs Group One: 3/4, 1, 1-1/4, 1-1/2, 2 inches (19.1, 25.4, 31.8, 38.1, 50.8 mm) Group Two: 2, 2-1/2, 3 inches (50.8, 63.5, 76.2 mm) Adapter plate.
Bussing	■ Tin-plated aluminum as standard. ■ Some copper bus panels available.	

Single-Phase — Main Circuit Breaker Loadcenters 10,000/25,000 Amperes Interrupting Capacity

Table 3-70. Single-Phase, 3-Wire — 120/240 Vac — Factory Bonded Split Neutral

Main Breaker Type	Main Ampere Rating	Maximum Number 1-Inch (25.4 mm) Space	Maximum Number 1-Inch (25.4 mm) Circuits	Enclosure Type	Box Size	Wiring Diagram Figure Number	Wire Size Range Cu/Al 60°C or 75°C for Main Breaker	Loadcenter Catalog Number with Combination Cover ①	Price U.S. $
BR 10 kAIC	100	20	20	Indoor	C2	68	#4 – 1/0	**BR2020B100**	
	100	16	24	Indoor	C1	69		**BR1624B100**	
BWH 25 kAIC	150	30	30	Indoor	G1	70	#2 – 300 kcmil	**BR3030B150**	
	200	20	40	Indoor	D1	71	#2 – 300 kcmil	**BR2040B200**	
	200	30	40	Indoor	G1	72		**BR3040B200**	
	200	40	40	Indoor	L1	70		**BR4040B200**	

① Combination style covers may be used in surface or flush applications.

Note: All main circuit breaker loadcenters are listed for use as service entrance equipment. Loadcenters are factory bonded for service entrance applications. Remove bonding strap for separate neutral and ground bars for sub-feed applications

Table 3-71. Single-Phase 3-Wire — 120/240 Vac — Insulated/Bondable Neutral

Main Breaker Type	Main Ampere Rating	Maximum Number 1-Inch (25.4 mm) Spaces	Maximum Number 1-Inch (25.4 mm) Circuits	Enclosure Type	Box Size	Wiring Diagram Figure Number	Wire Size Range Cu/Al 60°C or 75°C for Main Breaker	Loadcenter Catalog Number with Combination ② or NEMA Type 3R Cover	Price U.S. $
BR 10 kAIC	100	8	16	Indoor	B1	17	#4 – 1/0 ③	**BR816B100**	
		10	20	Indoor	A1	65		**BR1020B100S11**	
		10	20	Indoor	A1	65		**BR1020B100F11**	
		10	20	Outdoor	B2R	59		**BR1020B100RF** ④⑤	
		12	12	Indoor	B2	5		**BR1212B100**	
		12	20	Indoor	B2	19		**BR1220B100**	
		12	24	Outdoor	B2R	17		**BR1224B100R** ⑤	
		16	16	Indoor	C1	5		**BR1616B100**	
		16	20	Indoor	C1	60		**BR1620B100**	
		16	24	Outdoor	C1R	24		**BR1624B100R** ⑤	
		20	24	Outdoor	C3R	10		**BR2024B100R** ⑤	
		30	30	Indoor	⑥	⑥	⑥	⑥	
	125	16	24	Indoor	C1	24	#4 – 2/0	**BR1624B125**	
		20	24	Indoor	C1	10		**BR2024B125**	
		20	24	Outdoor	C3R	10		**BR2024B125R** ⑤	
BRH ⑦ 22 kAIC	100	20	24	Indoor	C2	10	#2/0 – 300 kcmil	**BR2024H100** ⑦	
BWH ⑧ 25 kAIC	150	8	16	Outdoor	C3R	18	#2 – 300 kcmil	**BR816B150RF** ④⑤	
		16	30	Indoor	C4	25		**BR1630B150**	
		20	30	Indoor	C4	26		**BR2030B150**	
		20	30	Outdoor	D1R	26		**BR2030B150R** ⑤	
		20	40	Indoor	D1	29		**BR2040B150**	
		20	40	Outdoor	D1R	29		**BR2040B150R** ⑤	
		24	30	Indoor	G1	27		**BR2430B150**	
		30	30	Outdoor	G1R	28		**BR3030B150R** ⑤	
		30	40	Indoor	G1	30		**BR3040B150**	
	200	4	8	Outdoor	8R	46	#2 – 300 kcmil	**BR48B200RF** ④⑨⑩	
		8	16	Outdoor	C3R	18		**BR816B200RF** ④⑤	
		16	32	Indoor	C4	29		**BR1632B200**	
		20	40	Outdoor	D1R	29		**BR2040B200R** ⑤	
		24	40	Indoor	G1	61		**BR2440B200**	
		30	40	Outdoor	G1R	30		**BR3040B200R** ⑤	
		40	40	Outdoor	L1R	28		**BR4040B200R** ⑤	
	225	42	42	Indoor	L2	31	#1 – 250 kcmil	**BR4242B225**	
		42	42	Outdoor	L2R	31		**BR4242B225R** ⑤	

② Combination style covers may be used in surface or flush applications.
③ Wire range size for BR1020B100SP is #6 – #1 Cu/Al.
④ Includes through-feed lugs for both phase and neutral conductors.
⑤ Rainproof panels are furnished with hub closure plates. For rainproof hubs, refer to **Page 3-63**.
⑥ See Copper Bus Offering, **Page 3-55**.
⑦ 22 kAIC series combination rating is obtained when Types BD, BR, BQ, BQC and GFCB 10 kAIC branch breakers are used in series with Type BRH main breaker.
⑧ 25 kAIC series combination rating is obtained when Types BD, BR, BQ, BQC and GFCB 10 kAIC branch circuit breakers are used in series with Type BWH main breaker.
⑨ Supplied with adapter plate to use DS Group1 hubs on **Page 3-63**. If 2.50-inch (63.5 mm) hub is needed, remove adapter and use ARP00007CH25 hub.
⑩ Neutral is bonded — suitable for service entrance only — cannot be converted for sub-feed application.

Note: All main circuit breaker loadcenters are listed for use as service entrance equipment and are shipped with neutral bonding strap preattached. The maximum rating of the panel is the main circuit breaker rating when used as service entrance equipment. Ground bar kits priced separately. See **Page 3-64**.

Box Sizes . . . . . **Pages 3-77** through **3-79**
Discount Symbol **22C**

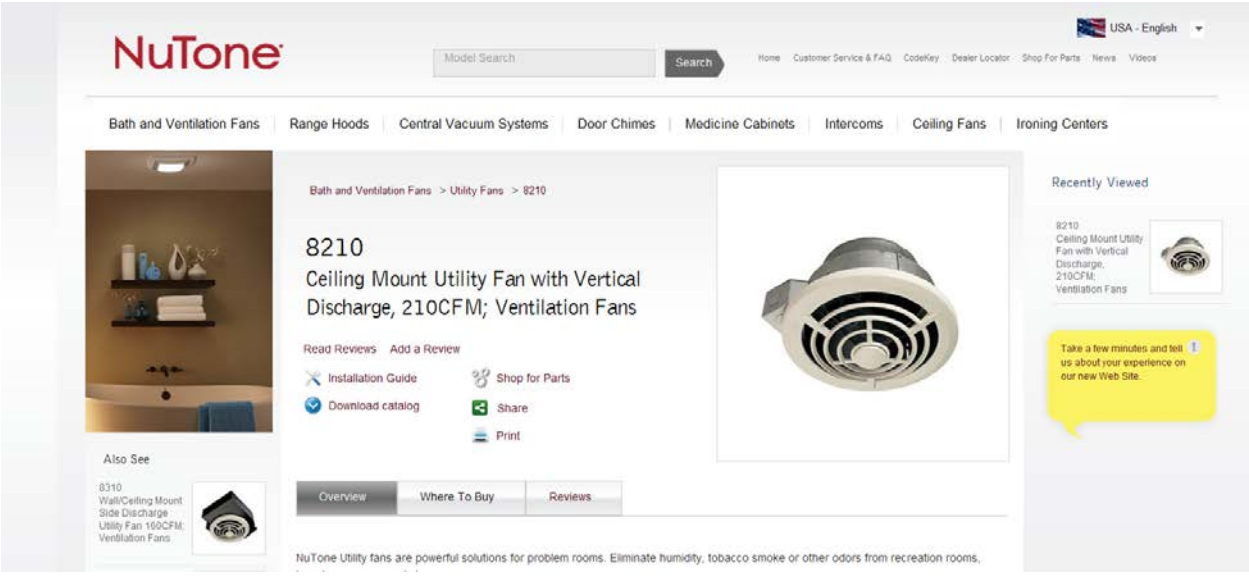
NuTone
Model Search
Search
USA - English
Home
Customer Service & FAQ
CodeKey
Dealer Locator
Shop For Parts
News
Videos
Bath and Ventilation Fans
Range Hoods
Central Vacuum Systems
Door Chimes
Medicine Cabinets
Intercoms
Ceiling Fans
Ironing Centers
Bath and Ventilation Fans > Utility Fans > 8210
8210
Ceiling Mount Utility Fan with Vertical Discharge, 210CFM; Ventilation Fans
Read Reviews
Add a Review
Installation Guide
Shop for Parts
Download catalog
Share
Print
Overview
Where To Buy
Reviews
NuTone Utility fans are powerful solutions for problem rooms. Eliminate humidity, tobacco smoke or other odors from recreation rooms,
Also See
8310
Wall/Ceiling Mount Side Discharge Utility Fan 160CFM; Ventilation Fans
Recently Viewed
8210
Ceiling Mount Utility Fan with Vertical Discharge, 210CFM; Ventilation Fans
Take a few minutes and tell us about your experience on our new Web Site.

Utility Fans

Exhaust Air

Ideal for family rooms, kitchens, laundries

Three ducting options:

- Through-the-wall
- Inside wall or ceiling
- Vertical discharge
- Choose auto-shutter or pull-chain models

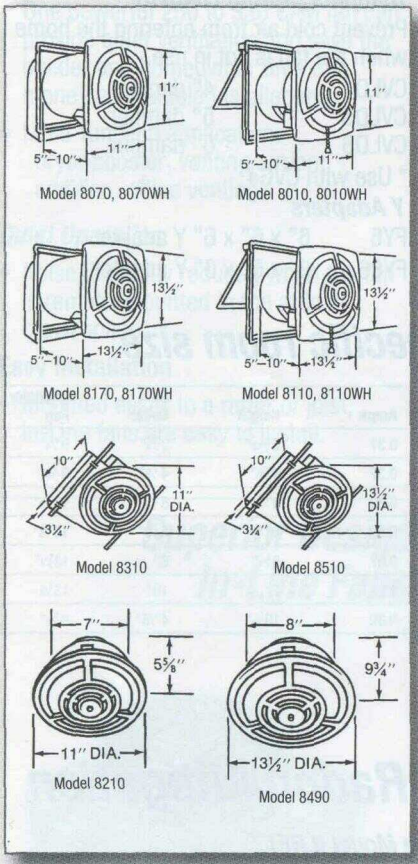

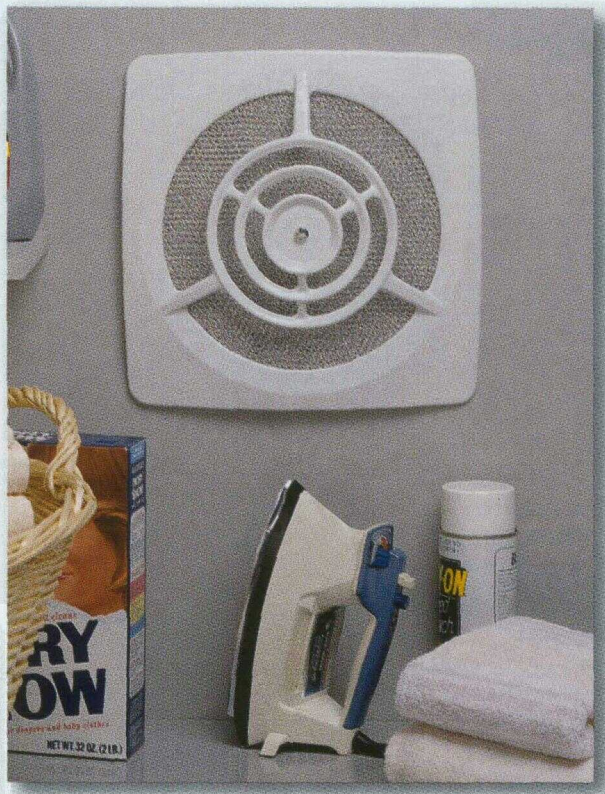

8070WH Automatic Fan - 8" White
8170WH Automatic Fan - 10" White

Straight-through-the-wall fans

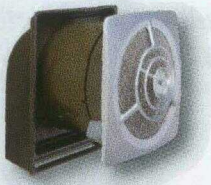

8070SA Automatic Fan – 8" Silver

- Shutter opens automatically when fan is turned on, closes tightly under spring tension when off.

8170SA Automatic Fan – 10" Silver

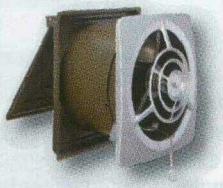

8010SA/WH - 8" Pull-Chain Fan

- Outside door closes tightly for weather seal

8110SA/WH – 10" Pull-Chain Fan

Inside wall or ceiling fans

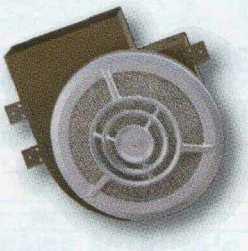

8310 Wall/Ceiling Fan
8" grille. Use with 834 Filter (optional)

8510 Wall/Ceiling Fan
10" grille. Use with 854 Filter (optional)

Models 8310, 8510 fit 2" x 4" walls or install in ceilings.

- Motors and impeller-type blade assemblies snap in.
- Housings have plug-in electrical receptacles.

Vertical discharge ceiling fans

8210 Fan - 7" Round. Use with 834 Filter (optional)

8490 Fan - 8" Round. Use with 854 Filter (optional)

- Excellent for kitchens, laundries, commercial rest rooms, anywhere you want to move a large volume of air
- Install in ceiling and ventilate directly through the roof with round ducting.
- Adjustable hanger bars for 16" or 24" o.c. joists
- All motors are pre-wired plug-in

Model No.	Description	Grille Finish	For Kitchens Up To	Other Rooms Up To	Duct Size	Amp Rating	Lamp Watts	HVI Certified Test Data: Air Delivery	HVI Certified Test Data: Sound Level
High CFM Kitchen/Utility Exhaust Fans									
8070SA	Thru-the-Wall Fan	Silver Anod. Aluminum	80 sq. ft.	200 sq. ft.	–	0.80	–	160 CFM	4.5 sones
8070WH	8" Auto Shutter	White Enamel							
8170SA	Thru-the-Wall Fan	Silver Anod. Aluminum	135 sq. ft.	335 sq. ft.	–	1.10	–	270 CFM	6.0 sones
8170WH	10" Auto Shutter	White Enamel							
8010SA	Thru-the-Wall Fan	Silver Anod. Aluminum	125 sq. ft.	310 sq. ft.	–	0.80	–	250 CFM	4.0 sones
8010WH	8" Pull Chain	White Enamel							
8110SA	Thru-the-Wall Fan	Silver Anod. Aluminum	275 sq. ft.	685 sq. ft.	–	1.10	–	550 CFM	6.0 sones
8110WH	10" Pull Chain	White Enamel							
8310	Ceiling/Wall Impeller	Silver Anod. Aluminum	90 sq. ft.	225 sq. ft.	3¼" X 10"	1.00	–	180 CFM	5.5 sones
8510	Ceiling/Wall Impeller	Silver Anod. Aluminum	150 sq. ft.	375 sq. ft.	3¼" X 10"	2.00	–	300 CFM	7.5 sones
8210	Vertical Discharge Fan	Silver Anod. Aluminum	105 sq. ft.	260 sq. ft.	7"	0.82	–	210 CFM	6.5 sones
8490	Vertical Discharge Fan	Silver Anod. Aluminum	130 sq. ft.	325 sq. ft.	8"	1.10	–	260 CFM	5.5 sones

5.03.4 ACCESSORIES

Data sheets to follow.

THE ASLIN SLOW-ROLL NARROW-BAR DISPENSER!

A New Way to Meet the Handicap-Accessibility Requirement and Reduce Waste Too!

Length of SLOW-ROLL Three-Roll Dispenser: 19 inches. Length of SLOW-ROLL Two-Roll Dispenser: 13 inches.

THE ASLIN SLOW-ROLL NARROW-BAR DISPENSER with FRICTION SLEEVE becomes a waste-reducing, SLOW-ROLLING dispenser while maintaining vandal resistant durability. Developed in cooperation with the U.S. Forest Service, the ASLIN SLOW-ROLL DISPENSER provides the user tissue by unrolling, but will not allow the roll to free-spool! The NARROW-BAR and FRICTION SLEEVE can be purchased separately for retrofit in existing ASLIN DISPENSER installations, and all parts of both NARROW-BAR, and WIDE-BAR dispensers are interchangeable!

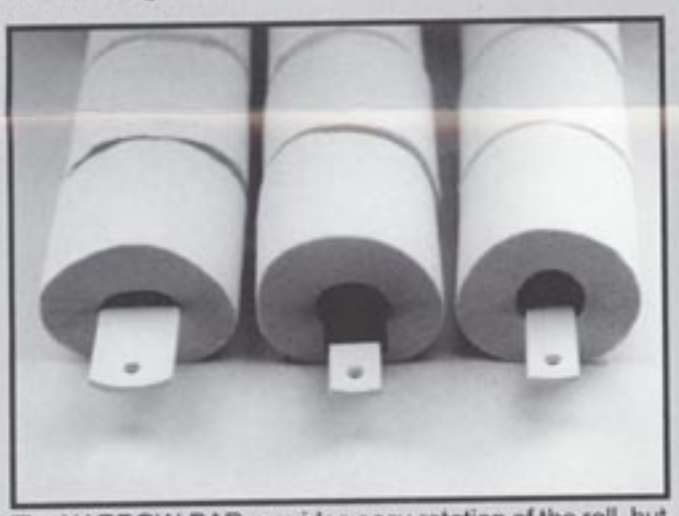

The NARROW-BAR provides easy rotation of the roll, but the friction sleeve prevents wasteful stripping or free-spooling. A quick pull on the tissue will cause the tissue to break or tear from the roll.

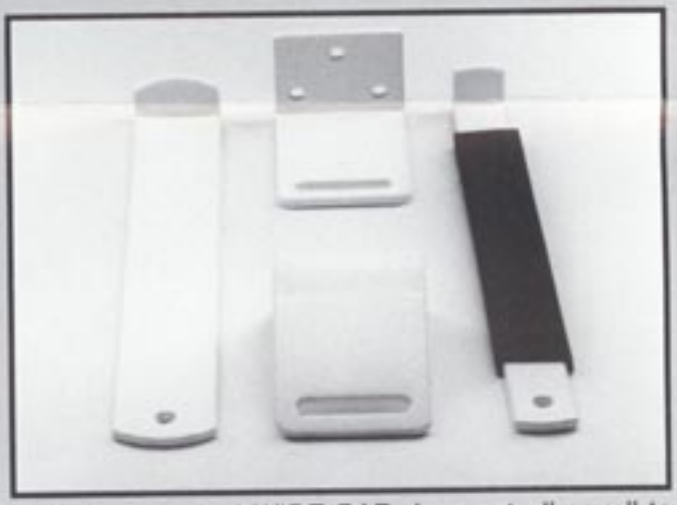

Two inch standard WIDE BAR does not allow roll to rotate, requiring tissue to be unraveled. One and one — quarter inch NARROW BAR can be retrofitted to prior ASLIN wide-bar installations if necessary to meet accessibility requirement.

Black Pearl Ultrafold Compact Paper Towel Dispenser

Model # T1750TBKRD Internet # 202798658

PRODUCT OVERVIEW

The Ultrafold dispenser's low profile design makes it ideal for small places. The Present system offers a touchless, smooth, one at a time towel presentation of C Fold or Multifold that adds to a pleasing and positive image.

- Ideal for tight fitting applications, neutral design complements any environment
- Designed to eliminate overstuffing of towels Present system offers touchless, smooth towel presentation
- Optional adhesive back great for mounting on the mirror to replace towel baskets
- Accepts virtually any C-fold or Multi-fold towel Break-resistant plastic construction Holds 240 C-fold or 400 Multi-fold towels, Black Pearl

SPECIFICATIONS

Assembled Depth (in.)	6 in	Assembled Height (in.)	11.5 in
Assembled Width (in.)	11.5 in	Cleaning Tool Type	Other Tool/Accessory
Commercial / Residential	Commercial	Manufacturer Warranty	None
Material	Plastic	Product Depth (in.)	6
Product Height (in.)	11.5	Product Weight (lb.)	0
Product Width (in.)	11.5	Returnable	30-Day

4781-15

Napkin Disposal

☐ Model 4781-15 — Surface-Mounted

Bradex®

☑ Standard Series — Satin Finish

Product Materials

COVER: 22 gauge stainless steel with exposed surfaces in architectural satin finish. Heavy-duty stainless steel piano hinge.

CONTAINER: 22 gauge stainless steel with exposed surfaces in architectural satin finish. All welded construction with rounded front corners. Bottom equipped with lock and heavy-duty stainless steel piano hinge.

Operation

Bottom opens for removal of waxed paper liner. Box of 500 waxed paper liners are available by ordering part number P11-022

Installation

Verify all rough-in dimensions prior to installation. Secure to wall or partition with mounting screws (included) at holes provided.

Guide Specification

Surface-mounted napkin disposal shall be fabricated of 22 gauge stainless steel with exposed surfaces in satin finish. Top attached by piano hinge. Bottom hinged for easy servicing.

Overall dimensions: 8"W x 11½"H x 4⅛"D.

ADA Compliant

☑ Consult local and national accessibility codes for proper installation guidelines.

☑ Conformity and compliance to local and national codes is the responsibility of the installer.

Dim. "A" Key Surface:	For Dim. "A"	Top of Unit	Bottom of Unit
Waste receptacle top lip to finished floor	40" (1016mm)	40" (1016mm)	28½" (724mm)
	36" (914mm)	36" (914mm)	24½" (622mm)
	32" (813mm)	32" (813mm)	20½" (521mm)
Rough wall opening:			
Surface Mount:	No rough opening, see overall dimensions		

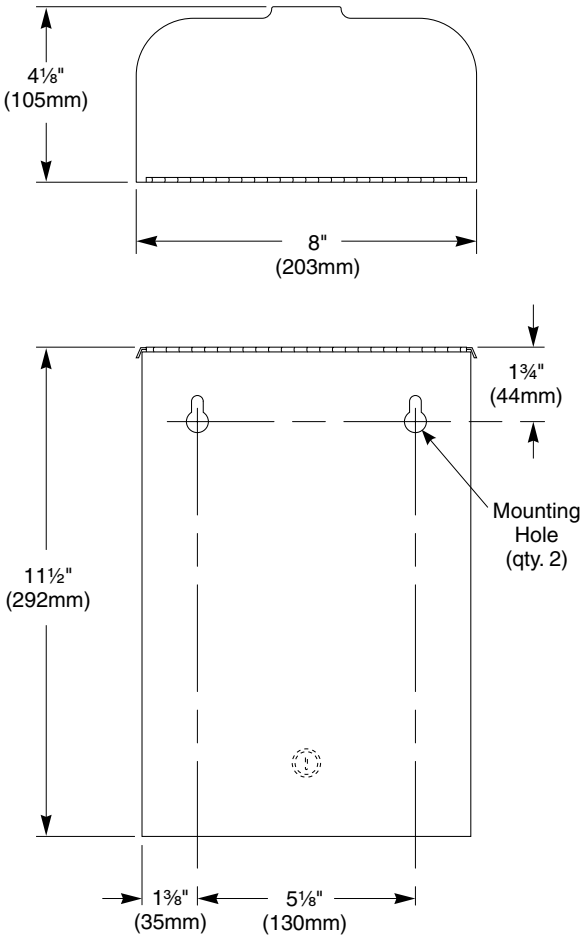

Washroom Accessories
Document No. 8415

Orders composed of products indicated as ***Bradex®*** will be available to ship in three days after receipt of order at the factory. There is no pricing penalty for this service from Bradley.

This information is subject to change without notice. 5-2-2012

© 2012 Bradley
P.O. Box 309, Menomonee Falls, WI 53052-0309
Phone: 800.BRADLEY (800.272.3539) Fax: 262.253.4161
bradleycorp.com

Soap Dispenser, 1250mL, Gray/White

PROVON

Technical Specs

Item	**Soap Dispenser**
Soap/Lotion Type	**Foam**
Operation Mode	**Manual**
Refill Type	**Proprietary Only**
Refill Size	**1250mL**
Material	**ABS**
For Use With	**Mfr. No. 8821-03, 8826-03, 8822-03, 8824-03**
Mount Type	**Wall Mount**

Finish	**Matte**
Color	**Gray/White**
Height	**3-31/32"**
Width	**11-55/64"**
Depth	**4-41/64"**
Standards	**ADA Compliant**
Features	**Slim design with high capacity, Large sight window and skylight allow at-a-glance product monitoring,Easily converts to locked dispenser, Lifetime guarantee, Customization available**
Includes	**Locking Key**

White Drip Tray, 6-7/64H x 3-1/2Wln, PK12

Technical Specs

Item	**White Drip Tray**	Height	**6-7/64"**
Material	**ABS Plastic**	Width	**3-1/2"**
Application	**Snap On Tray**	For Use With	**12Z335, 12Z336, 12Z340, 12Z341, 12Z349, 12Z350, 12Z354, 12Z355, 12Z360, 12Z361, 12Z362, 12Z363, 12Z368, 12Z369, 12Z370, 12Z371, 12Z372, 12Z373**

KROY®

Pictogram
1/32" raised-tactile graphic with 6" minimum height.

Non-glare Finish
Text and symbol colors contrast with background colors. UV-resistant, matte, eggshell, and non-glare finish.

Text
1/32" raised letters, 5/8" high uppercase Sans Serif typestyle.

Braille
Grade II Braille matches background color and is positioned directly below text.

ADA Injection-Molded Regulatory Signs (8" x 8")

MEN'S RESTROOM

#2385201 Black
#2385228 Gray
#2385202 Brown
#2385219 Blue

MEN/ISA

#2385207 Black
#2385231 Gray
#2385208 Brown
#2385222 Blue

WOMEN'S RESTROOM

#2385203 Black
#2385229 Gray
#2385204 Brown
#2385220 Blue

WOMEN/ISA

#2385209 Black
#2385232 Gray
#2385210 Brown
#2385223 Blue

RESTROOM

#2385205 Black
#2385230 Gray
#2385206 Brown
#2385221 Blue

RESTROOM/ISA

#2385211 Black
#2385233 Gray
#2385212 Brown
#2385224 Blue

STAIRS

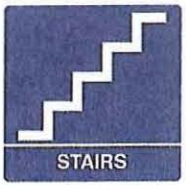

#2385217 Black
#2385235 Gray
#2385218 Brown
#2385227 Blue

NO SMOKING

#2385215 Black
#2385234 Gray
#2385216 Brown
#2385226 Blue

INTERNATIONAL SYMBOL OF ACCESSIBILITY

#2424801 Black
#2424804 Gray
#2424802 Brown
#2424803 Blue

IN CASE OF FIRE

#2424401 Black
#2424404 Gray
#2424402 Brown
#2424403 Blue

UNISEX RESTROOM

#2385240 Black
#2385243 Gray
#2385241 Brown
#2385242 Blue

UNISEX RESTROOM/ISA

#2385236 Black
#2385239 Gray
#2385237 Brown
#2385238 Blue

ADA Specialty Signs

CALIFORNIA CODE MEN'S RESTROOM

California

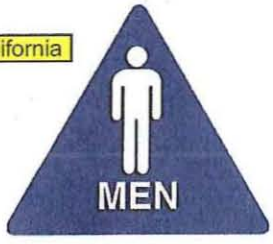

#2481601 Black
#2481604 Gray
#2481602 Brown
#2481603 Blue

CALIFORNIA CODE WOMEN'S RESTROOM

#2481701 Black
#2481704 Gray
#2481702 Brown
#2481703 Blue

CAL CODE RESTROOM / UNISEX

ADA Blue
0901753

8" x 8" Frames

#2392701 Black
#2392702 Gray (shown)
#2392703 Beige
#2392704 Brown
#2392705 Arch Gray
#2392706 White
#2392707 Blue

5.04 INSTALL MANUALS

The following installation manuals are referenced in the plans and are included for use by the installing contractor.

VELUX®

FS

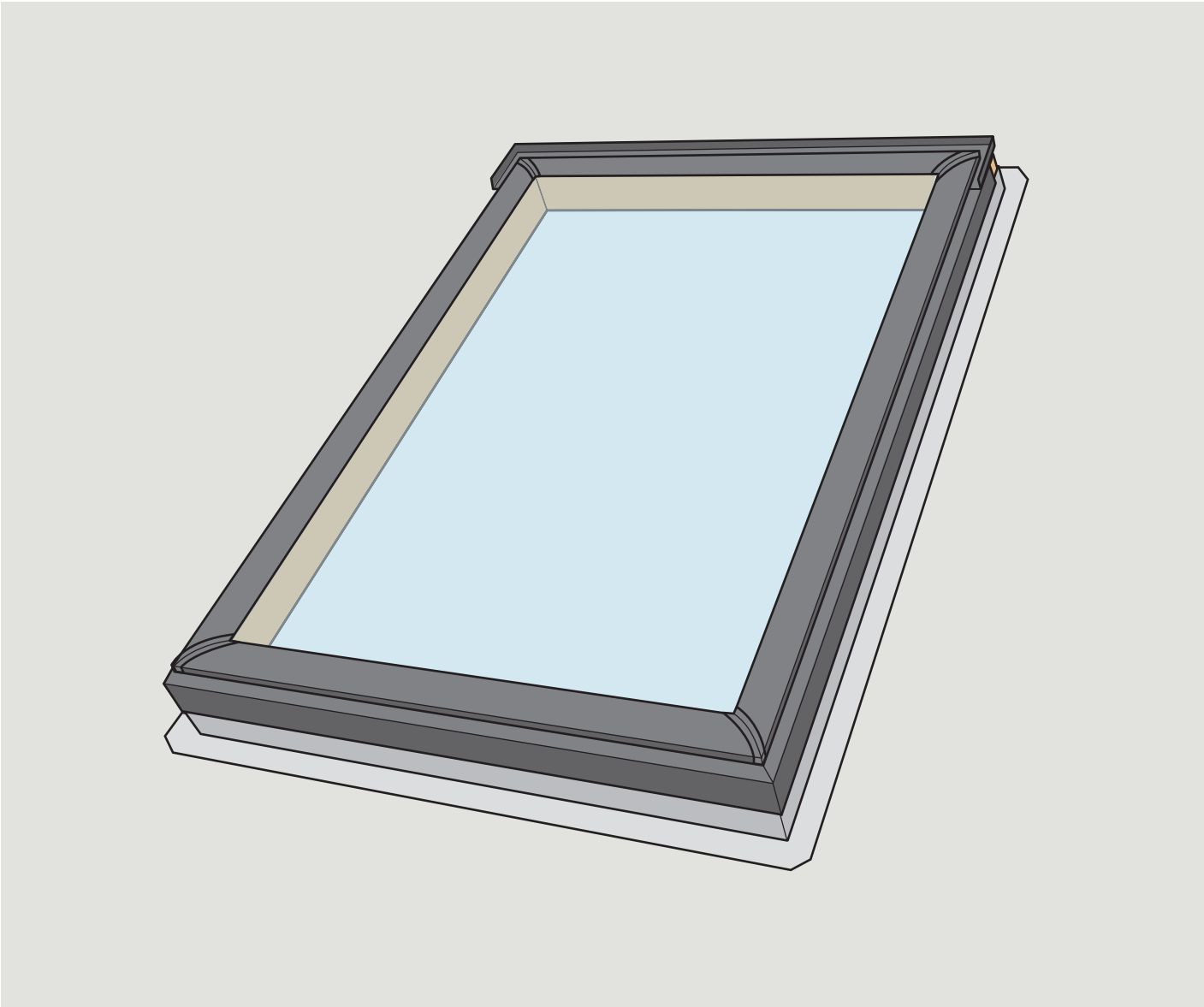

ENGLISH: **FS Deck Mounted Skylight Installation Instructions**

ESPAÑOL: **Instrucciones de instalación para tragaluz FS montado sobre tablero**

FRANÇAIS : **Instructions d'installation du puits de lumière FS à cadre intégré monté directement sur la toiture**

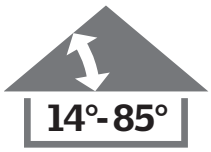

VAS 452197-2010-06

ENGLISH: Index

Page 2	Installation check list
Pages 3-4	Important installation requirements
Pages 5-6	Planning
Pages 7-9	Preparing roof and mounting skylight
Pages 10-13	Installing underlayment
Pages 14-15	Flashing

ESPAÑOL: Índice

Página 2	Lista de verificación de instalación
Páginas 3-4	Requisitos importantes de instalación
Páginas 5-6	Planificación
Páginas 7-9	Preparación del techo y montaje del tragaluz
Páginas 10-13	Instalación de la lámina de soporte
Páginas 14-15	Tapajuntas

FRANÇAIS : Index

Page 2	Liste de vérification préinstallation
Pages 3-4	Spécifications d'installation importantes
Pages 5-6	Planification
Pages 7-9	Préparation de la toiture et montage du puits de lumière
Pages 10-13	Installation de la membrane de toiture
Pages 14-15	Solin

ENGLISH: Installation check list

Installer should verify:

- Deck mounted skylights FS are installed in roof pitches from 14° to 85°.
- Rough opening is dimensioned correctly according to these installation instructions.
- Skylight is properly wrapped in VELUX adhesive skylight underlayment according to installation instructions supplied with the underlayment.
- Proper VELUX flashing for the actual roofing material is installed according to installation instructions supplied with the flashing.
- Skylight cladding is properly secured and counter-flashed over all flashing on the skylight frame.
- Bottom frame rubber gasket extends over the bottom sill flashing section and can be seen below the bottom frame cladding.
- Skylight and accessories operate properly.
- Customer is informed of the required maintenance of the product as found at www.velux.com.
- Customer is informed of the warranty claim procedure. For full VELUX warranty, go to www.velux.com.

IMPORTANT: Failure to install the skylight, flashing and blinds in strict accordance with these VELUX instructions shall void the VELUX warranty.

ESPAÑOL: Lista de verificación de instalación

El instalador debe verificar que:

- Los tragaluces FS montados sobre tablero estén instalados en techos con inclinación de 14° a 85°.
- Las dimensiones del hueco sean las correctas según estas instrucciones de instalación.
- El tragaluz esté correctamente envuelto con lámina de soporte autoadhesiva para tragaluz VELUX según las instrucciones de instalación provistas con la lámina de soporte.
- El tapajuntas VELUX indicado para el material de cubierta correspondiente se instale según las instrucciones de instalación provistas con el tapajuntas.
- El recubrimiento del tragaluz esté correctamente colocado y reforzado alrededor de todo el tapajuntas sobre el marco del tragaluz.
- La empaquetadura de goma del marco inferior cubra la sección inferior del tapajuntas del alféizar y se pueda ver por debajo del recubrimiento del marco inferior.
- El tragaluz y los accesorios funcionen correctamente.
- El cliente esté informado del mantenimiento que requiere el producto tal como se describe en www.velux.com.
- El cliente esté informado del procedimiento de uso de la garantía. Para obtener información completa sobre la garantía VELUX, visitar www.velux.com.

IMPORTANTE: De no instalarse el tragaluz, el tapajuntas y las persianas en estricto cumplimiento con las instrucciones VELUX, la garantía VELUX será anulada.

FRANÇAIS : Liste de vérification préinstallation

L'installateur devrait vérifier que :

- Le puits de lumière FS à cadre intégré monté directement sur la toiture est installé sur une pente de toit de 14° à 85°.
- L'ouverture brute soit correctement dimensionnée selon ces instructions d'installation.
- Le puits de lumière soit adéquatement enveloppé avec la membrane de toiture autocollante pour puits de lumière VELUX selon les instructions d'installation fournies avec ce matériel.
- Le bon type de solin VELUX choisi en fonction du type de matériel de toiture soit installé selon les instructions d'installation fournies avec le solin.
- Le revêtement du puits de lumière soit proprement fixé et que du contre-solin soit posé par-dessus tous les solins du cadrage du puits de lumière.
- Le joint de caoutchouc du cadre inférieur dépasse le rebord inférieur du solin d'appui et est visible sous le revêtement du cadre inférieur.
- Le puits de lumière et ses accessoires fonctionnent correctement.
- Le client est informé de l'entretien du produit requis tel que décrit sur le site internet www.velux.com.
- Le client est informé de la procédure de réclamation sous la garantie. Pour la garantie complète VELUX, visiter le www.velux.com.

IMPORTANT : L'omission d'installer le puits de lumière, le solin et les stores en stricte conformité avec les instructions VELUX annulera la garantie VELUX.

ENGLISH: Important installation requirements

Roof pitch
FS is designed for roof pitches 14° - 85° (3:12 - 137:12). In case of roof pitches below 14° (3:12), please contact your VELUX sales company for installation guidelines.

Importance of proper installation
Satisfactory product performance depends on proper installation.
Seller accepts no responsibility whatsoever for failure of an installer to install VELUX® roof windows and skylights in accordance with these installation instructions. Although VELUX roof windows and skylights are designed and manufactured to the highest standards, severe climatic exposure as well as adverse indoor conditions (ie high humidity) may produce temperature conditions which exceed product performance standards. In these cases, special preventive measures may be necessary.
Seller reserves the right to implement product changes for improvement without prior notification.

Sunscreening accessories
Refer to instructions for accessory type in question or contact your VELUX sales company for further information.

Vapor barrier
Where a vapor barrier is part of the roof construction, this barrier must be extended and connected to the skylight finish groove.

Treatment of wooden frame
Most VELUX skylights are pre-painted white but the option exists to order stain grade skylights. These stain grade skylights received a temporary treatment against mold and mildew. Further treatment with wood stain, paint etc is necessary and can be done prior to installation or shortly after installation. Care should be taken to ensure wood stain, paint etc is not applied to gaskets.

Seller assumes no obligation whatsoever for failure of an architect, installer or building owner to comply with all applicable laws, ordinances, building codes and safety requirements.

NOTICE
In rare circumstances, all glass may be subject to unexpected and spontaneous breakage due to imperfections in the glass that are undetectable during the manufacturing and inspection process by the manufacturer of the glass and VELUX factory.

Your VELUX sales company offers the choice of laminated or tempered glass skylights. Laminated glass is a combination of two or more glass sheets with one or more interlayers of plastic (PVB) or resin. In case of breakage, the interlayer is designed to hold the fragments together. Tempered glass does not contain an interlayer to hold the fragments together. Instead, tempered glass is designed to break into small, pebble-like pieces. When tempered glass breaks, pieces of glass come loose and may strike an individual.

Consult local regulations and/or building material consultants to determine which type of glass is right for you or if laminated glass is required in your application.

ESPAÑOL: Requisitos importantes de instalación

Inclinación del techo
FS está diseñado para techos con inclinación de 14 - 85° (3:12 - 137:12). Para techos con inclinación de menos de 14° (3:12), póngase en contacto con su distribuidor VELUX para solicitar las pautas de instalación.

Importancia de una instalación correcta
El rendimiento satisfactorio del producto depende de su correcta instalación.
Las ventanas de tejado y los tragaluces VELUX® deben instalarse siguiendo estas instrucciones. El proveedor no acepta responsabilidad alguna por errores del instalador. Aunque las ventanas de tejado y los tragaluces VELUX se han diseñado y fabricado para lograr los niveles de calidad más altos, la exposición a condiciones climáticas severas e incluso unas condiciones interiores pueden producir niveles de temperatura que exceden las condiciones de desempeño del producto. En estos casos puede ser necesario establecer medidas preventivas.
El proveedor se reserva el derecho a hacer modificaciones a los productos sin notificación previa con el fin de mejorarlos.

Accesorios de protección solar
Consulte las instrucciones por tipo de accesorio o comuníquese con su distribuidor VELUX para obtener más información.

Barrera de vapor
Cuando una barrera de vapor forma parte de la construcción de un techo, debe extenderse y conectarse a la ranura de remate del tragaluz.

Tratamiento del marco de madera
La mayoría de los tragaluces VELUX vienen prepintados en blanco pero se pueden pedir tragaluces barnizables. Los tragaluces barnizables han recibido un tratamiento temporario que los protege del moho y los hongos. Es necesario tratarlos con barniz, pintura, etc. antes de su instalación o inmediatamente después. Debe tenerse cuidado de no aplicar barniz, pintura, etc. a las empaquetaduras.

El proveedor no asume responsabilidad alguna por el incumplimiento de leyes, ordenanzas, normas de construcción o requisitos de seguridad por parte del arquitecto, instalador o propietario del edificio.

AVISO
Bajo ciertas circunstancias, todo cristal está sujeto a romperse de manera inesperada o espontánea debido a imperfecciones en el cristal no detectadas durante su manufacturación o durante el proceso de inspección por el manufacturador del cristal y de la fábrica VELUX.

Su distribuidor VELUX ofrece la opción de tragaluces de cristal laminado o templado: El cristal laminado es una combinación de dos o más hojas de cristal con una o más capas intercaladas de plástico (pvb) o resina. En caso de rotura, la capa esta diseñada para sostener unidos los fragmentos de cristal. El cristal templado no contiene capa intercalada para sostener unidos los fragmentos de cristal. En su lugar, el cristal templado está diseñado para que se rompa en pedazos bien pequeños. Cuando el cristal templado se rompe, pedazos de cristal peden soltarse y golpear a un individuo.

Consulte con los reglamentos locales y/o asesores de material de construcción para determinar cual tipo de cristal es el más adecuado para usted o si se requiere cristal laminado en su aplicación.

FRANÇAIS : Spécifications d'installation importantes

Pente de toit
FS est conçu pour les pentes de toit de 14° - 85° (3:12 - 137:12). En cas d'installation sur pente de toit inférieure à 14° (3:12), contactez s'il vous plait votre société de vente VELUX pour des instructions d'installation spécifiques.

L'importance d'une bonne installation
La qualité de l'installation influence le rendement du produit et, pour cette raison, l'entreprise.
Le vendeur désire vous informer qu'il n'accepte aucune responsabilité, quelle qu'elle soit, dans le cas où un installateur ne se conforme pas aux instructions recommandées dans ce feuillet pour l'installation d'un puits de lumière ou d'une fenêtre de toit VELUX®. Veuillez aussi remarquer que même si les fenêtres de toit et puits de lumière VELUX répondent à des normes de fabrication élevées, il se peut que certaines conditions climatiques particulièrement sévères, à l'intérieur (ex. humidité) comme à l'extérieur, affectent la performance du produit. Dans ces cas, des mesures préventives s'avèrent nécessaires.
D'autre part, le vendeur se réserve le droit d'apporter, sans préavis, des changements à ses produits dans le but de les améliorer.

Accessoires pare-soleil
Voir les instructions pour le type d'accessoires en question ou contacter votre société de vente VELUX pour de plus amples informations.

Coupe-vapeur
Lorsque la toiture comprend un coupe-vapeur, ce matériau doit être étendu et joint à la rainure du surface du puits de lumière.

Entretien du cadrage de bois
La plupart des puits de lumière VELUX sont prépeints en blanc, mais l'option de commander une teinture particulière est également offerte. Les puits de lumière teints sont traités temporairement contre la moisissure. Un traitement additionnel à base de teinture, peinture, etc. est nécessaire et peut être appliqué avant l'installation ou peu après l'installation. Une attention particulière doit être portée afin de ne pas appliquer de teinture, peinture, etc., sur les joints.

Le vendeur n'assume aucune responsabilité, quelle qu'elle soit, dans le cas où un architecte, un installateur ou un propriétaire n'observe pas les règlements de la loi qui sont applicables, les normes du code du bâtiment et de sécurité.

ATTENTION
Tout thermo/verre pourrait éclater d'une façon brusque et inattendue dans de rares circonstances dues à des imperfections du thermo/verre qui ne sont pas détectable lors de la fabrication et de l'inspection suivant la fabrication par le manufacturier du thermo/verre et à l'usine de VELUX.

Votre société de vente VELUX offre une sélection de thermo/verre laminé ou trempé pour ses puits de lumière. Le thermo/verre laminé représente une combinaison de deux ou plus d'unité de verre incluant une ou plusieurs couches intérieures de plastique (pvb) ou résine. Dans le cas de bris instantané, cette/ces couches intérieures auront la propriété de retenir les fragments du thermo/verre ensemble. Par contre, le thermo/verre trempé n'inclus pas cette/ces couches intérieures pour retenir les fragments du thermo/verre ensemble. Le thermo/verre trempé est conçu pour s'émietter en de petits fragments de verre. Lorsque le thermo/verre trempé se casse, les petites pièces de verre éclatées pourraient dans certaines occasions causées des dommages physiques ou de légères blessures aux individus se trouvant à proximité.

Consulter votre code du bâtiment et/ou un professionnel-consultant afin de bien déterminé le thermo/verre recommandé pour votre application ou si un thermo/verre laminé est nécessaire dans votre cas.

ENGLISH: Important installation requirements for the USA

VELUX® series A21 skylights are designed and engineered to be installed with VELUX flashing systems. VELUX flashing systems include VELUX adhesive skylight underlayment in a quantity sufficient to install one skylight of the size for which the flashing system was designed.

The VELUX "No Leak" warranty is based upon installation strictly in accordance with VELUX deck mounted skylight and related deck mounted flashing installation instructions, which specify the use and proper installation of the VELUX adhesive skylight underlayment packaged with the flashing system.

If VELUX adhesive skylight underlayment is not used or is not properly installed and a service issue occurs related to underlayment omission, failure, or its proper installation as detailed in the VELUX deck mounted skylight and deck mounted flashing installation instructions, the VELUX "No Leak" installation warranty is void.

VELUX America Inc. understands that there are other types of adhesive underlayment that are of equal or higher quality than what is provided by VELUX America Inc. However, VELUX America Inc. cannot approve or validate that any specific type of adhesive underlayment is better or worse. Thus, VELUX America Inc. places the risk of using an alternative adhesive underlayment onto the specifier by stating that if the alternative underlayment becomes a failure point for the skylight or flashing system even if installed according to our instructions, then the VELUX "No Leak" warranty cannot be honored. Further, the alternative underlayment must not in any way obstruct, alter or prevent the proper functioning of the complete skylight and flashing installation, such as increasing the overall flashing system thickness beyond prescribed dimensions.

VELUX America Inc. affirms that if a high quality alternative adhesive underlayment, installed per our instructions, does not fail but a leak occurs in some other VELUX skylight or flashing component due to no cause from the alternative underlayment, then such a leak would be covered under the terms of the "No Leak" warranty.

ESPAÑOL: Requisitos importantes de instalación para los Estados Unidos

La serie A21 de tragaluces VELUX® montados sobre tablero está diseñada para instalarse con los sistemas de tapajuntas VELUX. Los sistemas de tapajuntas VELUX incluyen cantidad suficiente de lámina de soporte autoadhesiva para tragaluz VELUX para instalar un tragaluz del tamaño para el cual se diseñó el sistema de tapajuntas.

La garantía VELUX de "filtración cero" se basa sobre la instalación realizada en estricto cumplimiento con las instrucciones de instalación del tragaluz VELUX montado sobre tablero y el tapajuntas VELUX montado sobre tablero correspondiente, que especifica el uso y la correcta instalación de la lámina de soporte autoadhesiva para tragaluz VELUX, incluida con el sistema de tapajuntas.

La garantía de instalación VELUX de "filtración cero" queda anulada si la lámina de soporte autoadhesiva para tragaluz VELUX no se utiliza o no se instala correctamente y se produce un problema técnico a raíz de la falta o falla de la lámina, o de su correcta instalación, como se describe en las instrucciones de instalación del tragaluz VELUX montado sobre tablero y del tapajuntas VELUX montado sobre tablero.

VELUX America Inc. entiende que existen otros tipos de láminas de soporte autoadhesivas que son de igual o mayor calidad que la provista VELUX America Inc. Sin embargo, VELUX America Inc. no puede aprobar o validar que ningún tipo específico de lámina autoadhesiva sea mejor o peor. Por lo tanto, VELUX America Inc. responsabiliza al especificador por el uso de una lámina de soporte autoadhesiva alternativa, al enunciar que si la lámina de soporte alternativa es motivo de falla del tragaluz o del sistema de tapajuntas, incluso si se ha instalado de acuerdo con nuestras instrucciones, la garantía VELUX de "filtración cero" no será válida. Asimismo, la lámina de soporte alternativa de ninguna manera debe obstruir, modificar o evitar el funcionamiento correcto de la instalación completa del tragaluz y tapajuntas, por ejemplo, aumentando el grosor total del sistema de tapajuntas por encima de las dimensiones indicadas.

VELUX America Inc. afirma que si una lámina de soporte autoadhesiva alternativa, de alta calidad, instalada de acuerdo con nuestras instrucciones, funciona correctamente, pero ocurre una filtración en otro componente del tragaluz o tapajuntas VELUX que no fue causada por la lámina de soporte alternativa, la filtración estaría cubierta de acuerdo con las condiciones de la garantía de "filtración cero".

FRANÇAIS : Spécifications d'installation importantes pour les États-Unis

La série A21 de puits de lumière VELUX® à cadre intégré est conçue pour être installée avec les trousses de solins VELUX. Les trousses de solins VELUX comprennent la membrane de toiture autocollante pour puits de lumière VELUX en quantité suffisante pour l'installation d'un puits de lumière du format pour lequel la trousse de solins a été conçue.

La garantie VELUX contre les fuites s'applique strictement aux installations conformes aux instructions d'installation des puits de lumière VELUX à cadre intégré monté directement sur la toiture et des solins VELUX reliés, lesquelles spécifient l'utilisation et l'installation adéquate de la membrane de toiture autocollante pour puits de lumière VELUX fournie avec la trousse de solin.

Advenant le cas où la membrane de toiture autocollante pour puits de lumière VELUX n'est pas utilisée ou n'est pas proprement installée selon les instructions fournies pour le puits de lumière VELUX à cadre intégré monté directement sur la toiture et pour solins VELUX reliés et qu'un problème relié à l'omission ou l'installation inadéquate de cette membrane survient, la garantie VELUX contre les fuites serait annulée.

VELUX America Inc. est conscient qu'il existe d'autres types de membranes de toiture autocollantes de même qualité ou de qualité supérieure que celle fournie par VELUX America Inc. Toutefois, VELUX America Inc. ne peut approuver ou valider qu'un type particulier de membrane de toiture autocollante est de meilleure ou moindre qualité. À cet effet, en stipulant qu'advenant le cas ou une membrane alternative cause une défaillance du puits de lumière ou du solin, même si celle-ci est installée conformément aux instructions d'installation, VELUX America Inc. se réserve le droit de refuser la responsabilité, qui incombera alors au spécificateur. Dans ce cas, VELUX America Inc. pourra donc refuser d'honorer la garantie VELUX contre les fuites. De plus, cette membrane alternative ne doit en aucune façon nuire, altérer ou empêcher le bon fonctionnement de l'entière installation du puits de lumière et système de solin, p. ex. augmenter l'épaisseur du solin au-delà des dimensions prescrites.

VELUX America Inc. affirme par contre qu'advenant une fuite d'une composante du puits de lumière ou des solins en présence d'une membrane de toiture autocollante alternative de qualité supérieure installée selon nos instructions, mais non reliée à ladite fuite, alors celle-ci pourrait être couverte selon les termes de la garantie VELUX contre les fuites.

ENGLISH: **Clearance around installations**

ESPAÑOL: **Espacio libre alrededor de las instalaciones**

FRANÇAIS : **Dégagement requis autour de l'installation**

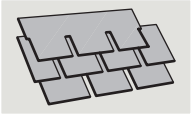

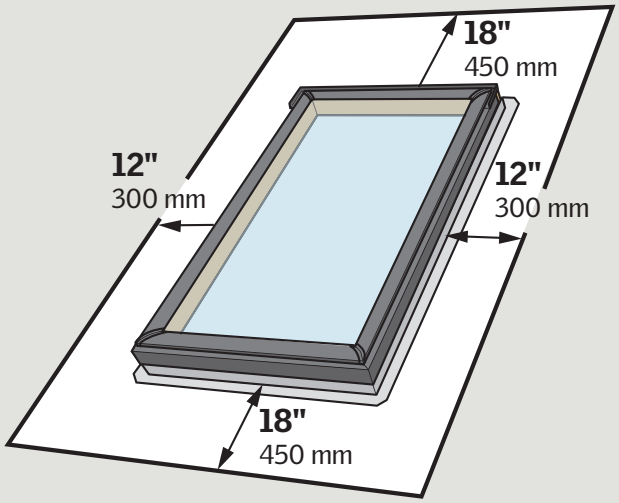

ENGLISH: Maintain illustrated clearances between skylight frame and critical areas such as valleys, ridges, slope changes and roof-to-wall-intersections.
When installing skylights side by side within the span 2½" (65 mm) - 12" (300 mm), please refer to VELUX combi-flashing instructions.

ESPAÑOL: Respete los espacios libres ilustrados entre el marco del tragaluz y áreas críticas como limahoyas, cumbreras, cambios de inclinación e intersecciones de techo y pared.
Cuando instale tragaluces contiguos a una distancia de 2½" (65 mm) a 12" (300 mm) entre ellos, consulte las instrucciones de tapajuntas adosados de VELUX.

FRANÇAIS : Respecter le dégagement illustré entre le cadre du puits de lumière et les endroits critiques tels que noue, faîtage, variation d'inclinaison et intersection de toiture et mur.
Lors d'installation de puits de lumière VELUX côte à côte avec espacement de 2½" (65 mm) - 12" (300 mm), veuillez vous référer aux instructions portant sur les solins combinés VELUX.

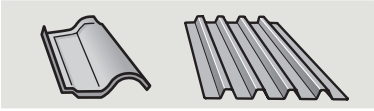

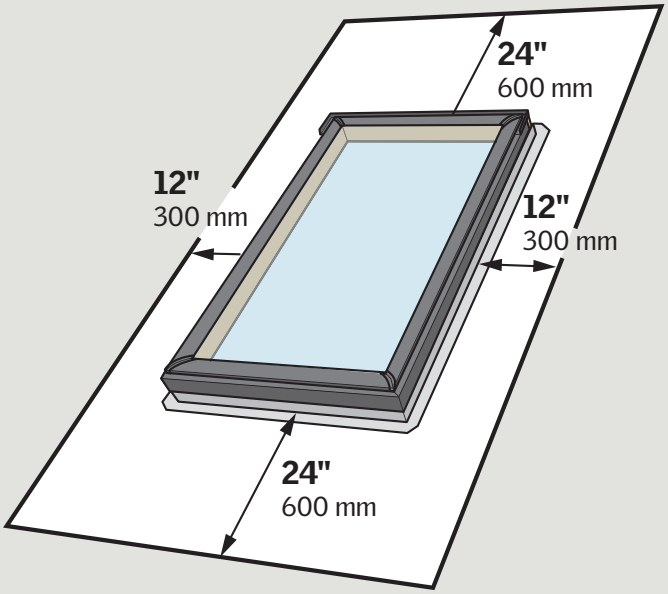

ENGLISH: Light shaft application

ESPAÑOL: Aplicación del hueco de luz

FRANÇAIS : Ouverture du puits de lumière

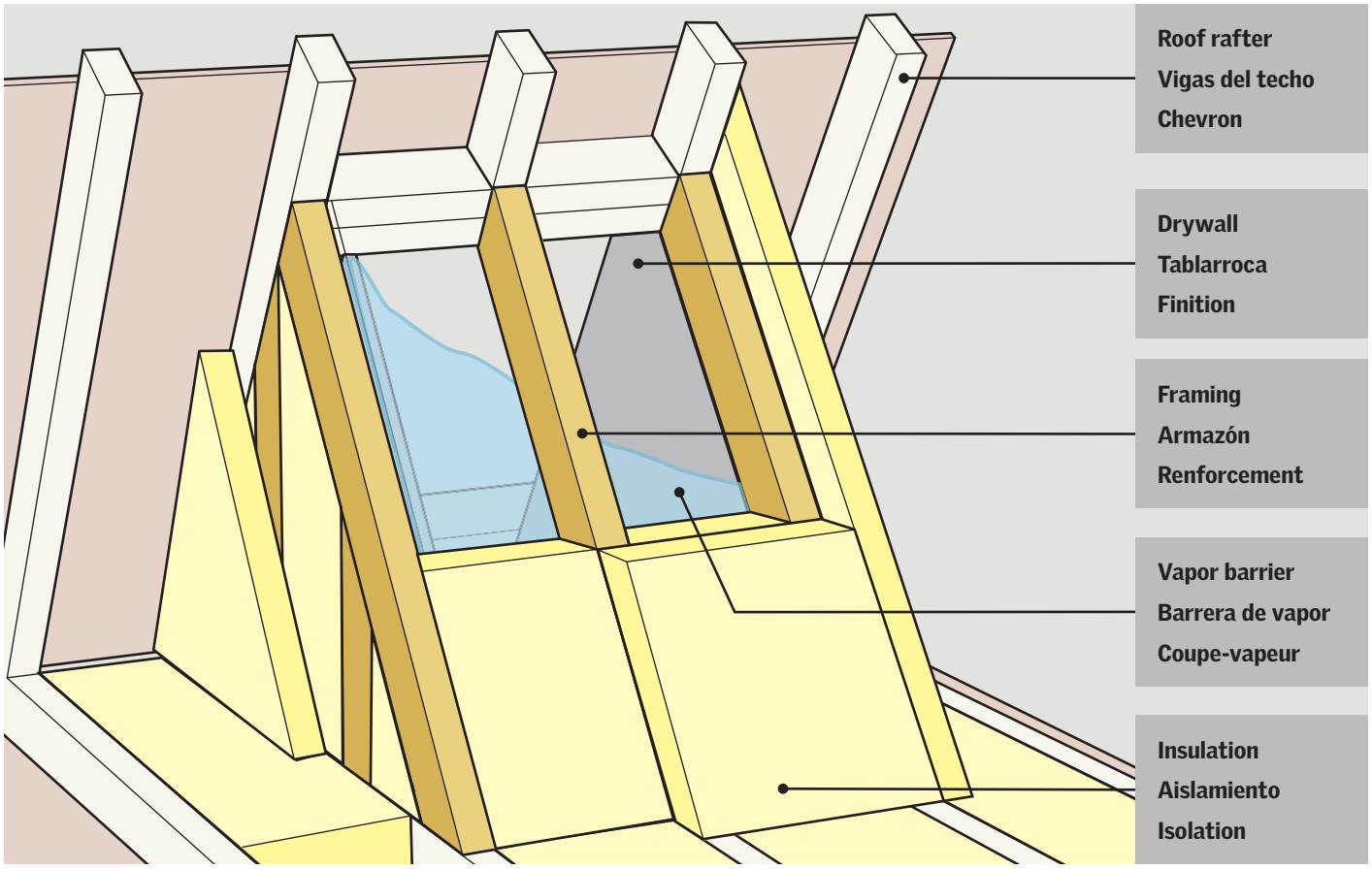

ENGLISH: Cut rough opening according to the measurements in the chart.

Roof with battens:
Clear away battens from rough opening to allow for proper installation of underlayment.

ESPAÑOL: Corte el hueco de acuerdo a las medidas en la tabla.

Techo con rastreles:
Quite los rastreles del hueco para permitir la correcta instalación de la lámina de soporte.

FRANÇAIS : Couper l'ouverture brute selon les dimensions du tableau.

Toiture avec voliges :
Retirer les lattes de toit de l'ouverture brute pour permettre une installation adéquate de la membrane.

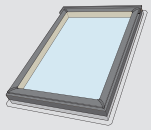

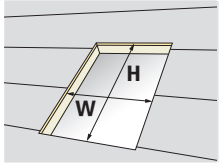

Skylight size Tamaño del tragaluz Taille du puits de lumière	Rough opening Medida del hueco Dimensions de l'ouverture brute
A06	14½" x 45¾" 368 mm x 1162 mm
C01	21" x 26⅞" 533 mm x 682 mm
C04	21" x 37⅞" 533 mm x 962 mm
C06	21" x 45¾" 533 mm x 1162 mm
C08	21" x 54 7/16" 533 mm x 1382 mm
C12	21" x 70¼" 533 mm x 1784 mm
D26	22½" x 22 15/16" 572 mm x 582 mm
D06	22½" x 45¾" 572 mm x 1162 mm
M02	30 1/16" x 30" 763 mm x 762 mm
M04	30 1/16" x 37⅞" 763 mm x 962 mm
M06	30 1/16" x 45¾" 763 mm x 1162 mm
M08	30 1/16" x 54 7/16" 763 mm x 1382 mm
S01	44¼" x 26⅞" 1123 mm x 682 mm
S06	44¼" x 45¾" 1123 mm x 1162 mm

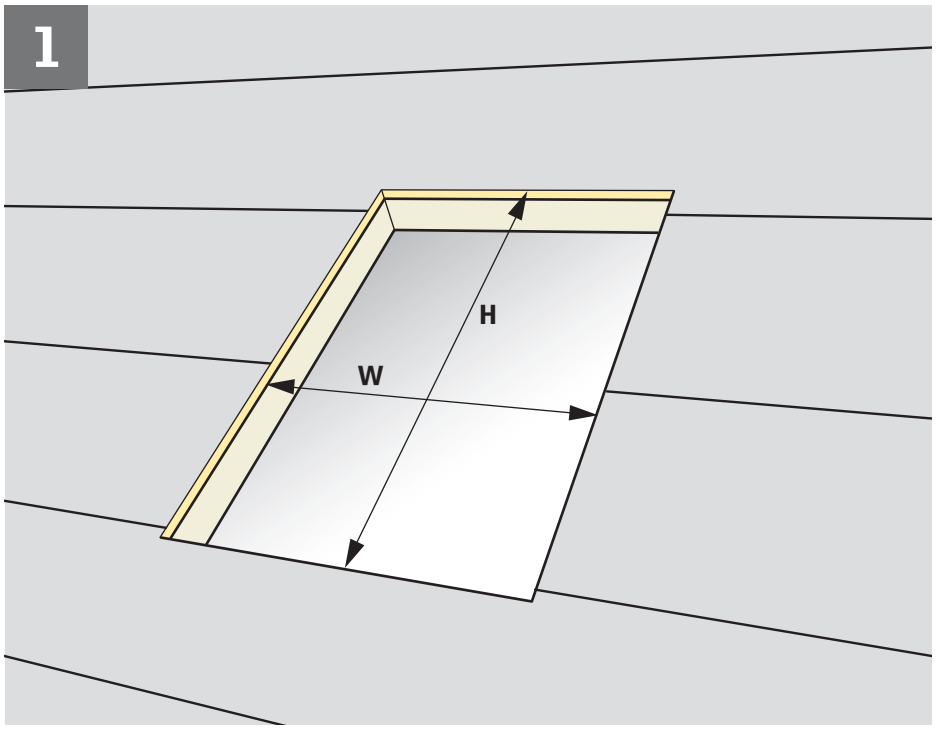

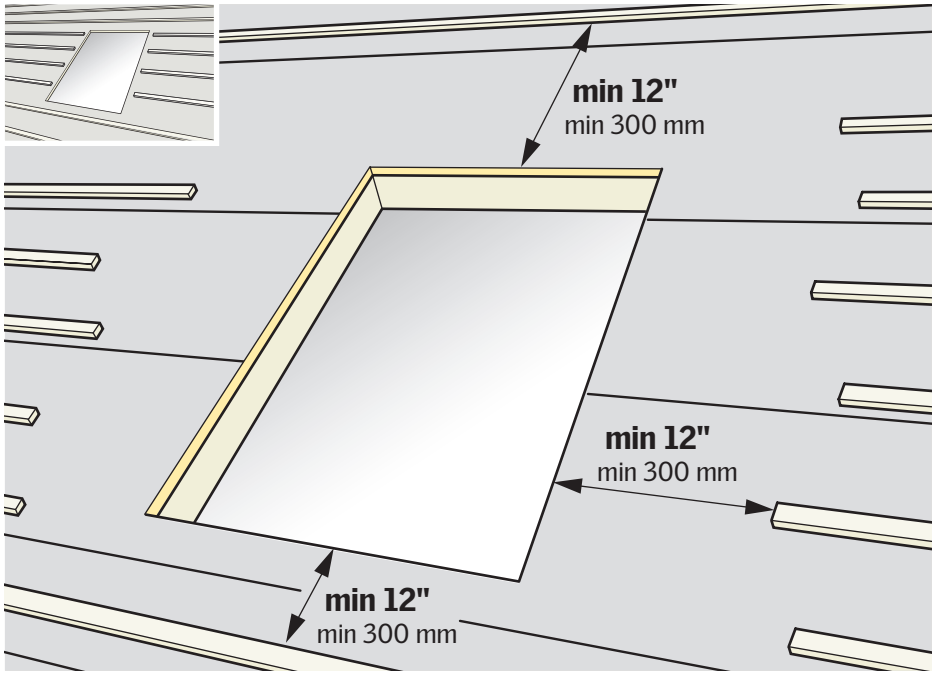

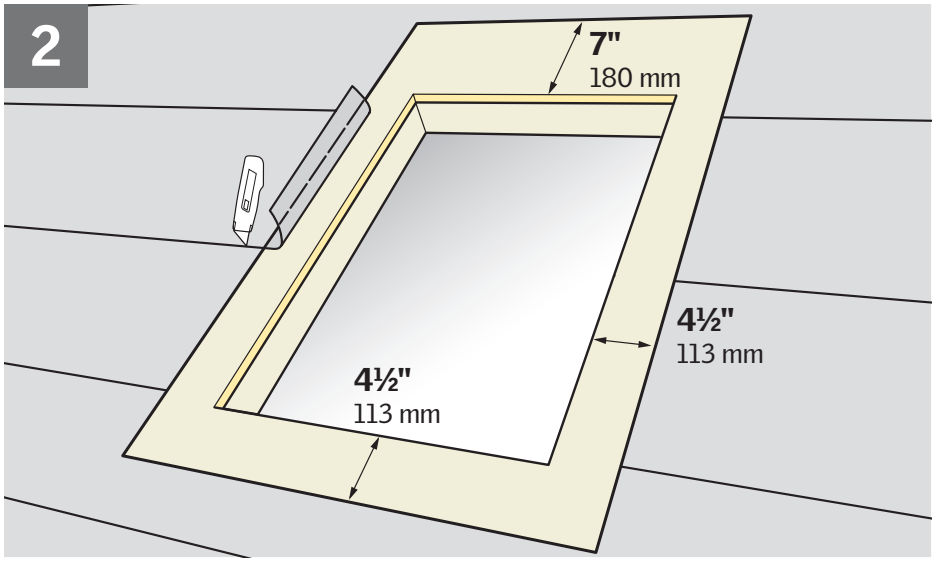

ENGLISH: Remove existing roofing underlayment around the rough opening as shown.

ESPAÑOL: Retire la lámina de soporte existente de la zona alrededor del hueco tal como se indica.

FRANÇAIS : Retirer la membrane de toiture existante autour de l'ouverture brute, tel qu'illustré.

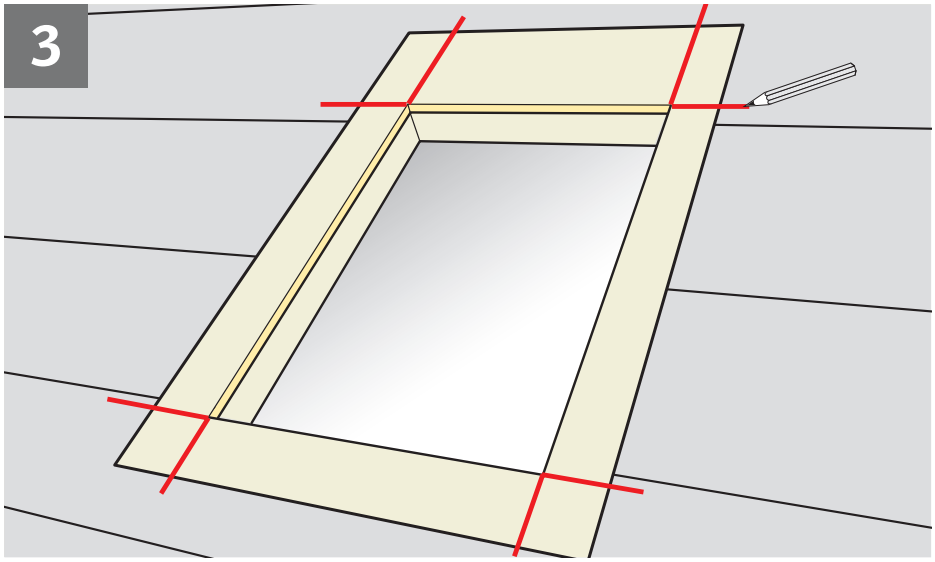

ENGLISH: Mark corners of the rough opening.

ESPAÑOL: Marque las esquinas alrededor del hueco.

FRANÇAIS : Marquer les coins de l'ouverture brute.

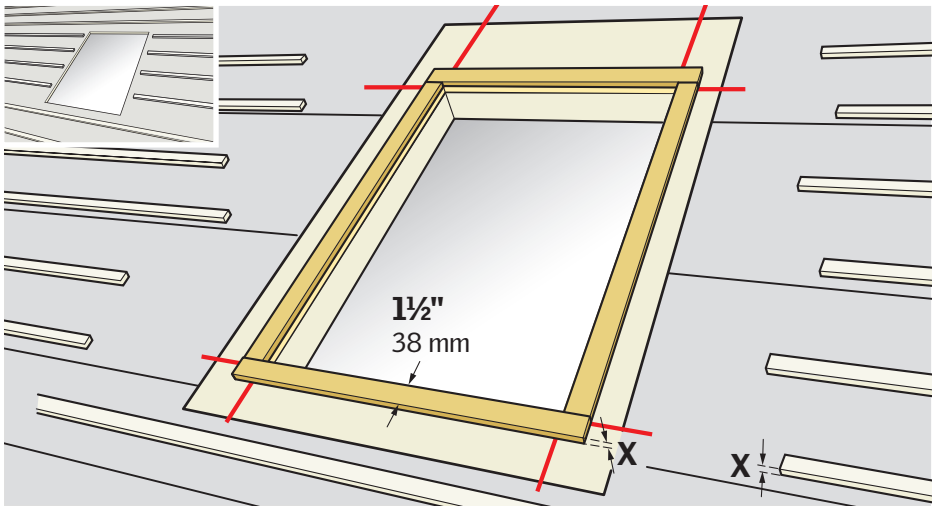

ENGLISH: **Roof with battens:** Place 1½" (38 mm) wide battens around rough opening. Batten thickness around rough opening should be equal to thickness of battens used for roofing material.

ESPAÑOL: **Techo con rastreles:** Coloque rastreles de 1½" (38 mm) de ancho alrededor del hueco. Los rastreles a colocar sobre el hueco deben tener el mismo grosor que los usados para el material de cubierta.

FRANÇAIS : **Toiture avec voliges :** Placer des lattes de largeur 1½" (38 mm) autour de l'ouverture brute. L'épaisseur des lattes utilisées autour de l'ouverture devrait être égale à l'épaisseur des lattes utilisées pour le matériel de toiture.

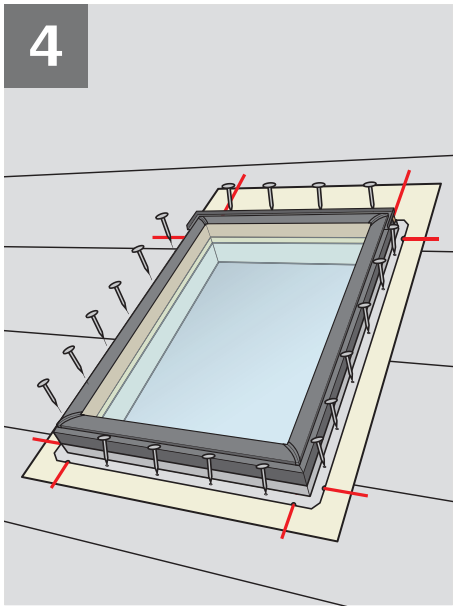

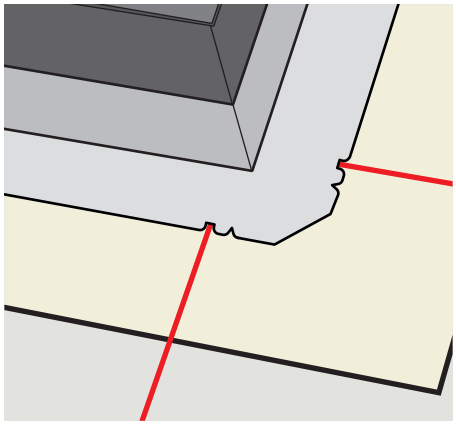

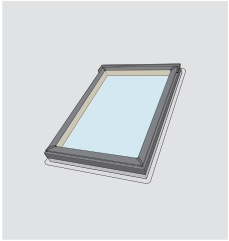

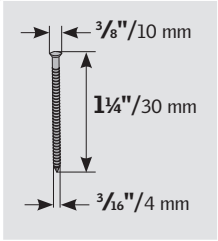

Skylight size Tamaño del tragaluz Taille du puits de lumière	Nails Clavos Clous
A06	20
C01	18
C04	20
C06	22
C08	24
C12	24
D26	16
D06	22
M02	20
M04	22
M06	24
M08	26
S01	22
S06	26

ENGLISH: Center skylight over properly cut and framed rough opening using alignment notches as illustrated. Anchor skylight using 1¼" (30 mm) nails provided with skylight (one nail is required at all pre-punched holes in mounting flange). Nails are double hot dipped zinc coated carbon steel.

ESPAÑOL: Coloque la tragaluz encima el hueco preparado y use las muescas como mostrado en el dibujo. Sujete la tragaluz con 1¼" (30mm) clavos sumistrado en la caja. Asegurase que cada rincon de la metal reborde alrededor la tragaluz tiene a menos uno clavo. Los clavos son sumerido dos veces en zinc acero de carbono.

FRANÇAIS : Centrer le puits de lumière au-dessus de l'ouverture brûte en utilisant les encoches d'alignements, tel qu'illustré. Attacher le puits de lumière en utilisant les clous fournis de 1¼" (30 mm) (un clou est requis à chaque trous pré-perforé dans la moulure du puits de lumière). Les clous sont plongé à chaud deux fois, dans un acier de carbonate revêtu de zinc.

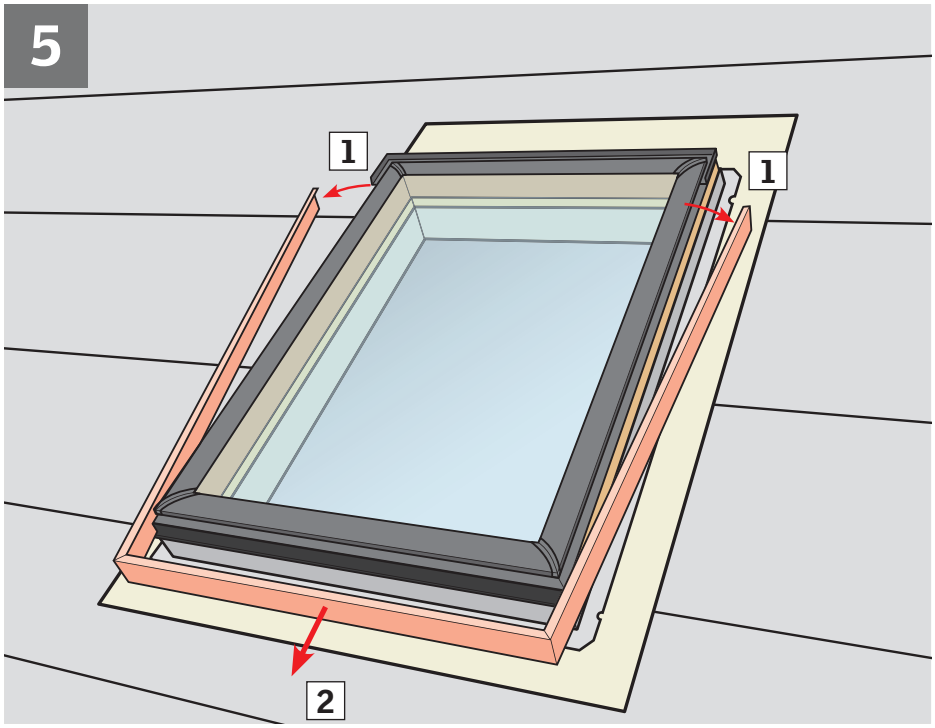

ENGLISH: To properly install VELUX adhesive skylight underlayment, remove cladding as shown.

ESPAÑOL: Para la correcta instalación de la lámina de soporte autoadhesiva para tragaluz VELUX, debe retirar el recubrimiento como se indica.

FRANÇAIS : Pour une installation adéquate de la membrane de toiture autocollante pour puits de lumière VELUX, retirer le revêtement, tel qu'illustré.

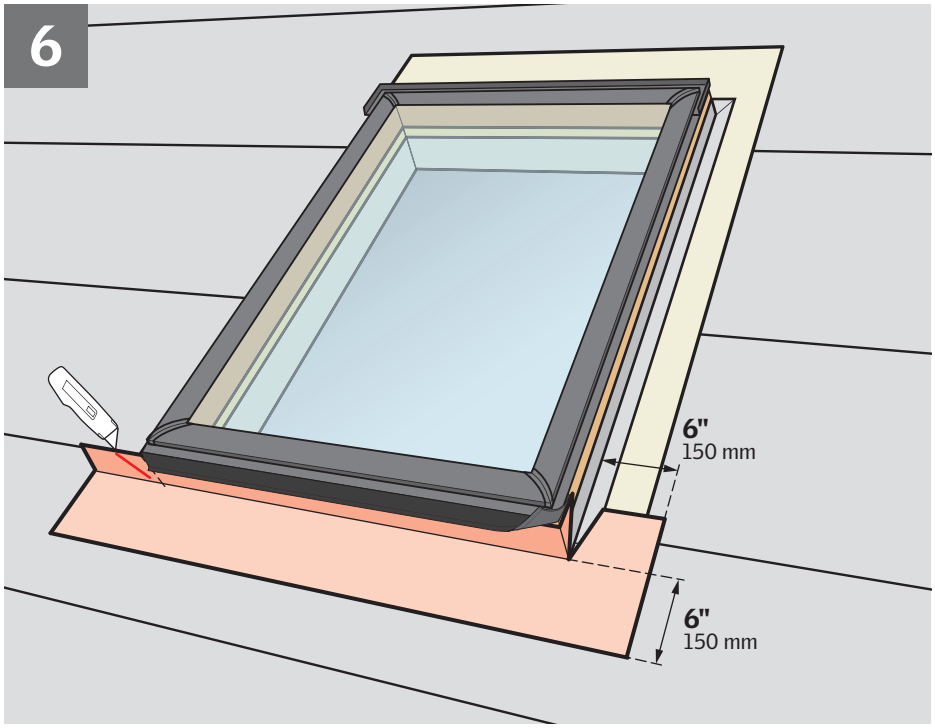

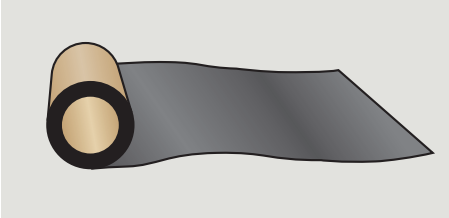

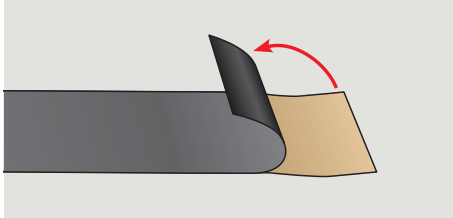

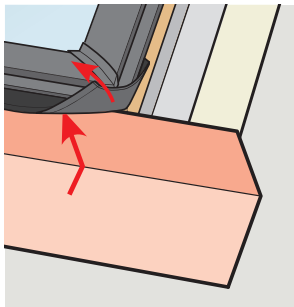

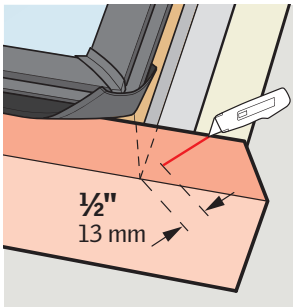

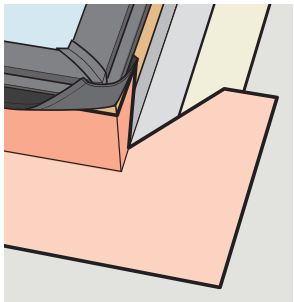

ENGLISH: To ensure waterproofing, skylight frames should be completely wrapped in VELUX adhesive skylight underlayment supplied with the flashing. This underlayment must be applied before installing the flashing.

Note: If snow accumulation on the roof is likely, waterproofing is achieved by installing a continuous self-adhesive waterproof membrane beneath the roofing material and flashing material. VELUX adhesive skylight underlayment around the skylight frame must be properly integrated with waterproof membrane on roof decking.

Peel off backing from VELUX adhesive skylight underlayment prior to applying it to roof decking and skylight frame. Ensure that surfaces are clean, dry and free of debris.

Wrap the bottom frame and corners of the skylight with the underlayment and create water-shedding laps over roofing underlayment.

Note: Lift up the rubber gasket while wrapping the bottom frame.

Note: Observe the measurements stated.

ESPAÑOL: Para garantizar la impermeabilidad, los marcos del tragaluz deben estar completamente envueltos con la lámina de soporte autoadhesiva VELUX que viene con el tapajuntas. La lámina debe aplicarse antes de instalar el tapajuntas.

Nota: Si se acumula nieve sobre el techo, se logra la impermeabilidad instalando una membrana impermeable autoadhesiva continua por debajo del material de cubierta y del material del tapajuntas. La lámina de soporte autoadhesiva VELUX colocada alrededor del marco del tragaluz debe integrarse correctamente con la membrana impermeable del tablero.

Despegue la protección del reverso de la lámina de soporte autoadhesiva VELUX antes de aplicarla al tablero del techo y el marco del tragaluz. Verifique que las superficies estén limpias, secas y sin residuos.

Envuelva las esquinas y marco inferior del tragaluz con la lámina de soporte para crear solapas impermeabilizantes sobre la lámina de soporte del techo.

Nota: Levante la empaquetadura de goma mientras envuelve el marco inferior.

Nota: Respete las medidas especificadas.

FRANÇAIS : Pour en assurer son étanchéité, les cadres du puits de lumière devraient être complètement enveloppés à l'aide de la membrane de toiture autocollante pour puits de lumière VELUX fournie avec le solin. Cette membrane doit être appliquée avant l'installation du solin.

Note : Si des accumulations de neige sont probables, l'étanchéité sera assurée en installant une membrane autocollante à l'épreuve des intempéries en continu sous le matériel de toiture et sous les solins. La membrane de toiture autocollante pour puits de lumière VELUX autour du cadre du puits de lumière doit être proprement intégrée à la membrane étanche du tablier de toiture.

Retirer le papier protecteur de la membrane de toiture autocollante pour puits de lumière VELUX avant de l'appliquer à la toiture et au cadre du puits de lumière. Assurez-vous que les surfaces sont propres, sèches et sans débris.

Envelopper le cadre inférieur et les coins du puits de lumière à l'aide de la membrane autocollante et replier de façon à former des rebords pour l'évacuation de l'eau par-dessus la membrane de la toiture.

Note : Soulever le joint de caoutchouc pour envelopper le cadre inférieure.

Note : Respecter les dimensions illustrées.

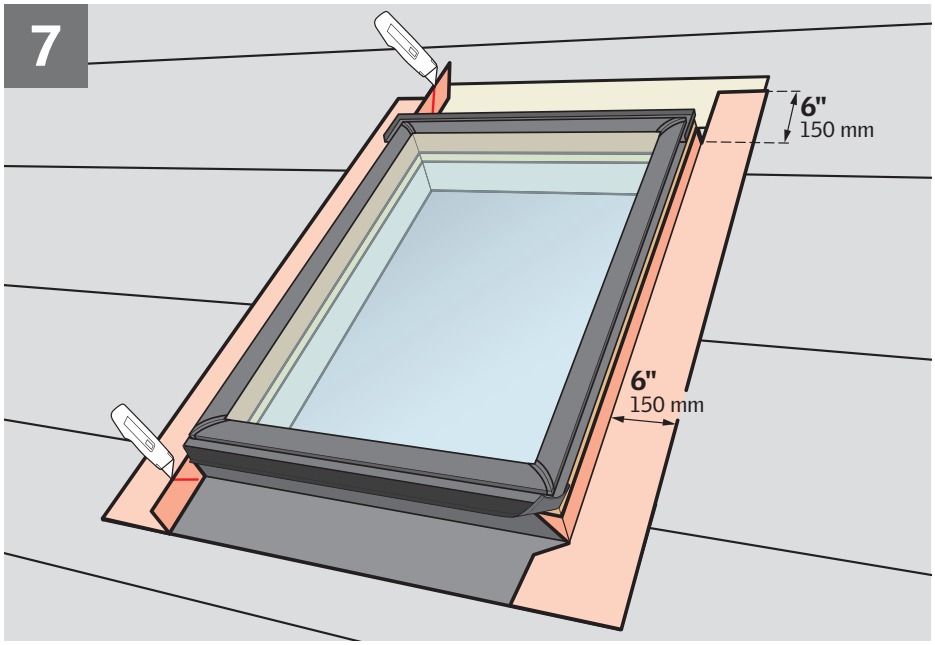

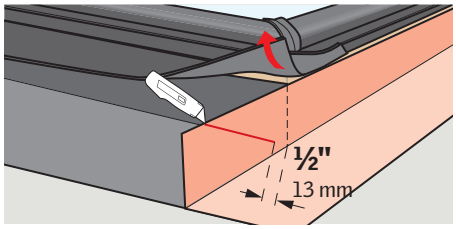

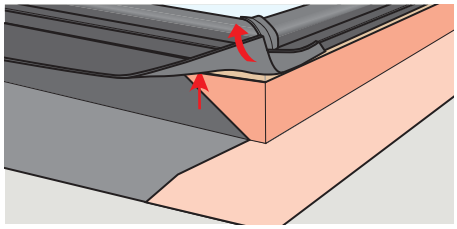

ENGLISH: Wrap the side frames and corners of the skylight with VELUX adhesive skylight underlayment and create water-shedding laps over roofing underlayment.
Note: Observe the measurements stated.

ESPAÑOL: Envuelva las esquinas y lados del marco del tragaluz con la lámina de soporte autoadhesiva VELUX para crear solapas impermeabilizantes sobre la lámina de soporte del techo.
Nota: Respete las medidas especificadas.

FRANÇAIS : Envelopper les côtés du cadre et les coins du puits de lumière avec la membrane de toiture autocollante pour puits de lumière VELUX et former des rebords pour l'évacuation de l'eau par-dessus la membrane de toiture.
Note : Respecter les dimensions illustrées.

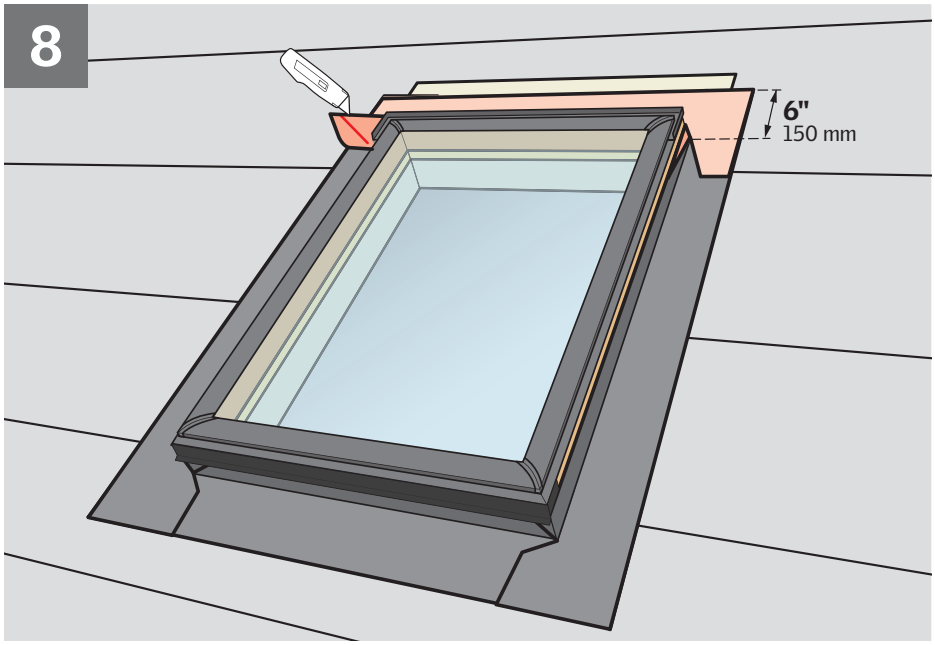

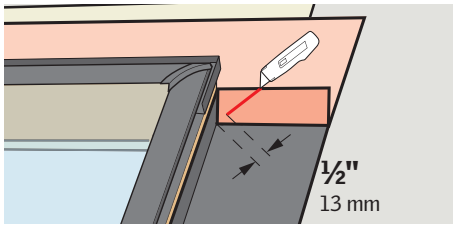

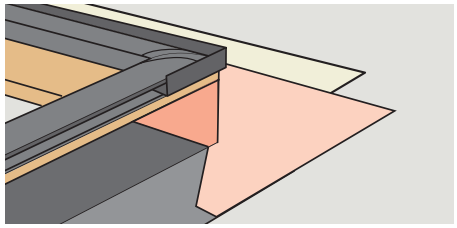

ENGLISH: Wrap the top frame and corners of the skylight with VELUX adhesive skylight underlayment and create proper water-shedding lap.

ESPAÑOL: Envuelva las esquinas y marco superior del tragaluz con la lámina de soporte autoadhesiva VELUX para crear solapas impermeabilizantes apropiadas.

FRANÇAIS : Envelopper la partie supérieure et les coins du puits de lumière avec la membrane de toiture autocollante pour puits de lumière VELUX et former des rebords pour l'évacuation de l'eau.

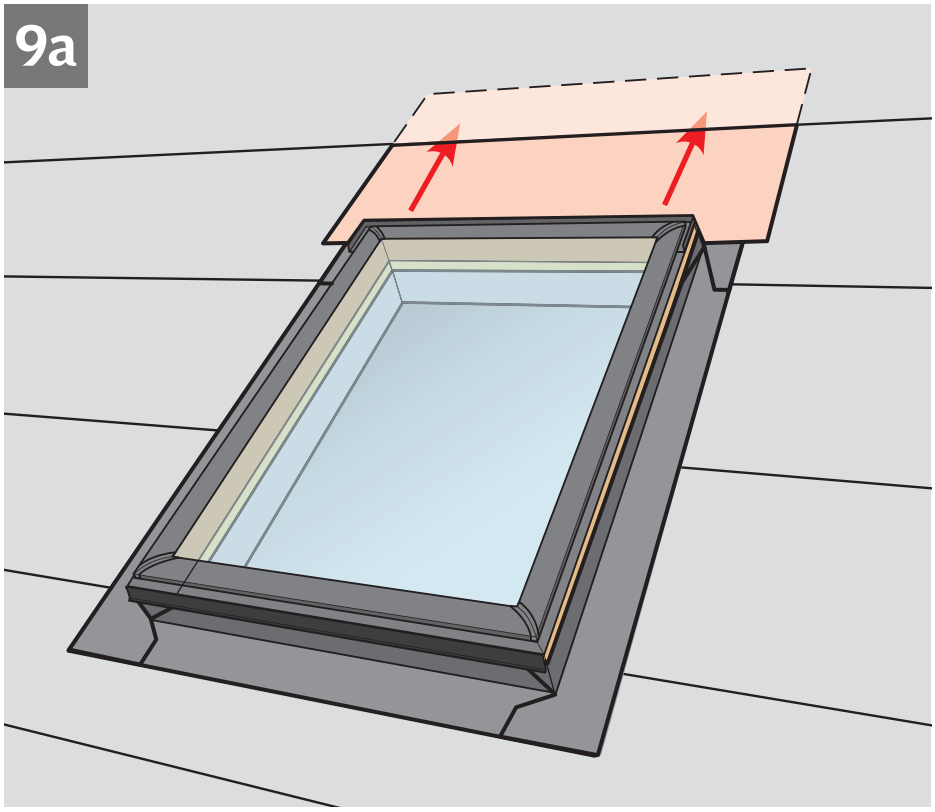

ENGLISH: To allow for proper drainage, interweave roofing underlayment as shown in 9a for new construction applications. For retrofit applications, interweave roofing underlayment as shown in 9b.

ESPAÑOL: Para lograr un drenaje adecuado, intercale la lámina de soporte para techo como se indica en 9a para construcciones nuevas. Para aplicaciones mejoradas, intercale la lámina de soporte para techos como se indica en 9b.

FRANÇAIS : Pour assurer un drainage adéquat, entrecroisez avec la membrane de toiture tel qu'illustré à la figure 9a dans le cas d'une installation sur une nouvelle construction. Pour une installation sur une toiture existante, entrecroiser avec la membrane de toiture, tel qu'illustré à la figure 9b.

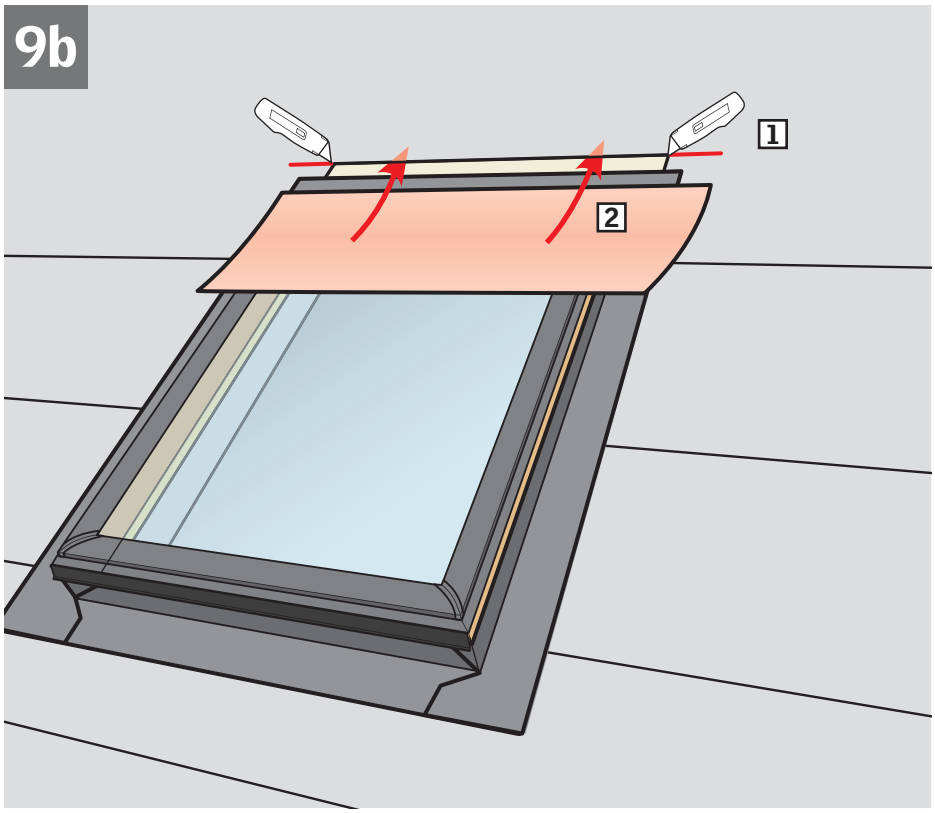

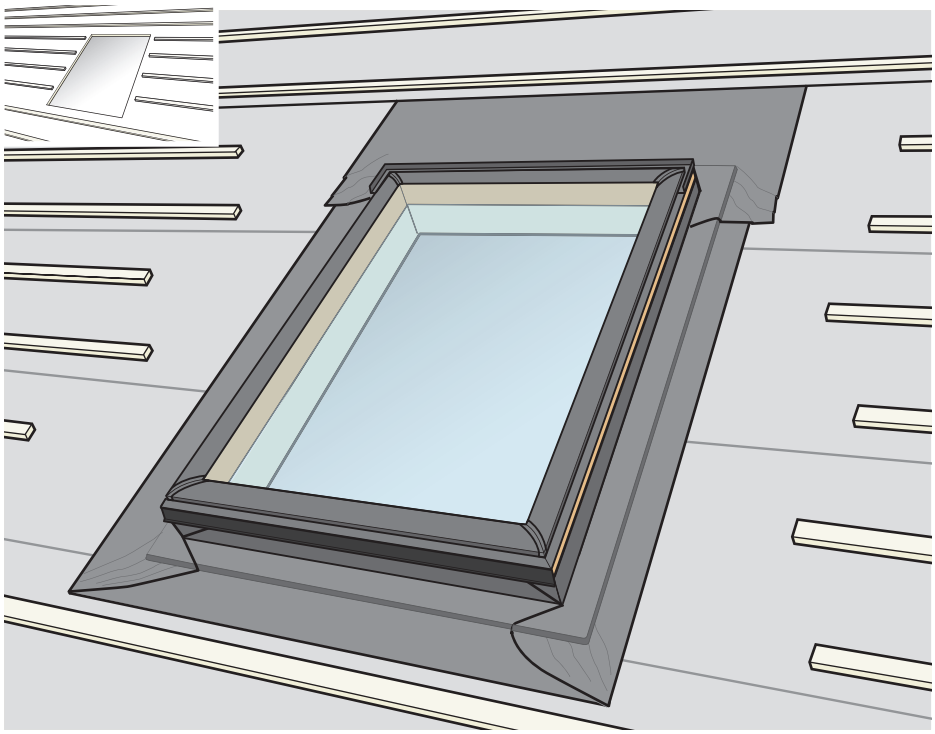

ENGLISH: Installing VELUX adhesive skylight underlayment on roof with battens:
Refer to installation instructions included with VELUX adhesive skylight underlayment.

ESPAÑOL: Instalación de la lámina de soporte autoadhesiva para tragaluz VELUX en techos con rastreles:
Consulte las instrucciones de instalación incluidas con la lámina de soporte autoadhesiva VELUX.

FRANÇAIS : Installation de la membrane de toiture autocollante pour puits de lumière VELUX sur toiture avec voliges :
Veuillez vous référer aux instructions d'installation fournies avec la membrane de toiture autocollante pour puits de lumière VELUX.

VELUX

ZOZ 216

ENGLISH: VELUX Adhesive Skylight Underlayment Installation Instructions
ESPAÑOL: Lámina de soporte autoadhesivo para tragaluz VELUX – Instrucciones de instalación
FRANÇAIS : Instructions pour l'installation de la membrane de toiture autocollante de puits de lumière VELUX

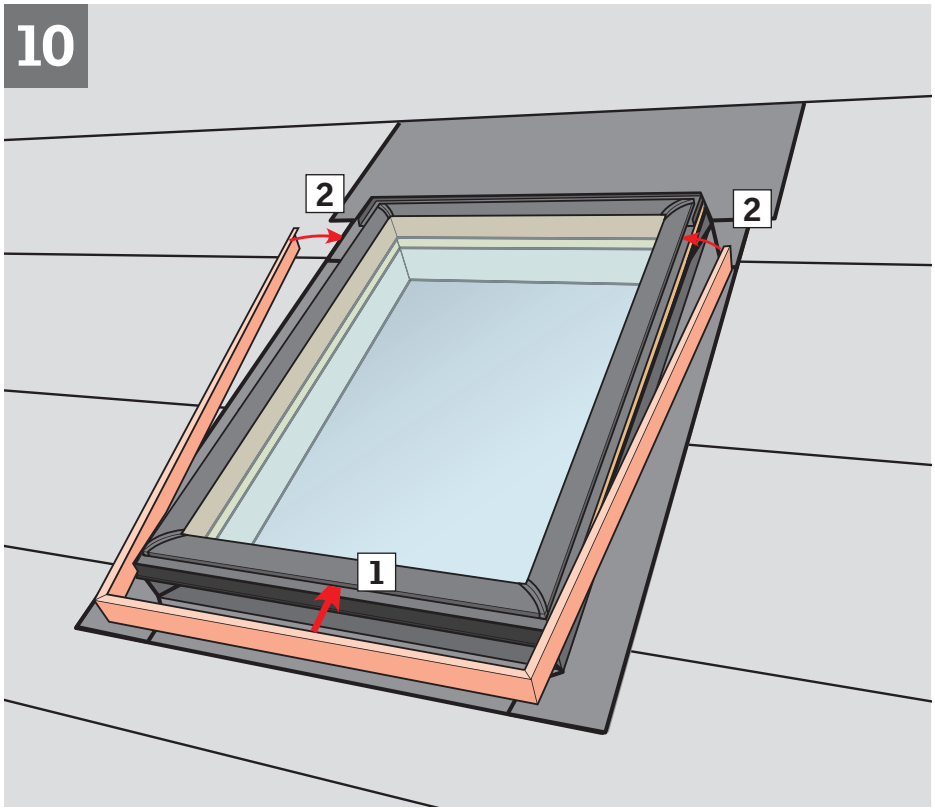

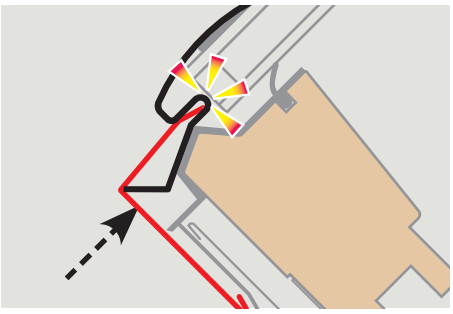

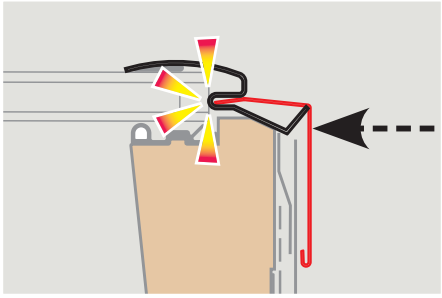

ENGLISH: You are now ready to install the flashing. If the flashing is not to be installed immediately, reinstall cladding.

ESPAÑOL: Ya puede instalar el tapajuntas. Si no va a instalar el tapajuntas inmediatamente, vuelva a colocar el recubrimiento.

FRANÇAIS : Vous êtes maintenant prêt à installer les solins. Si les solins ne sont pas installés immédiatement, réinstaller le revêtement.

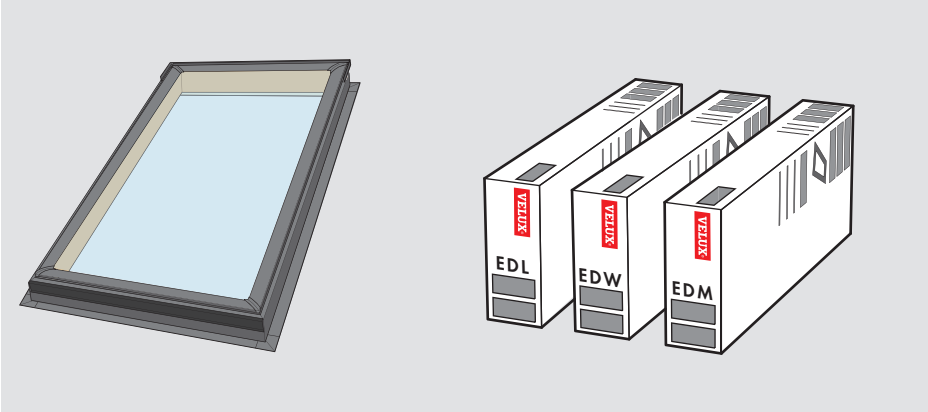

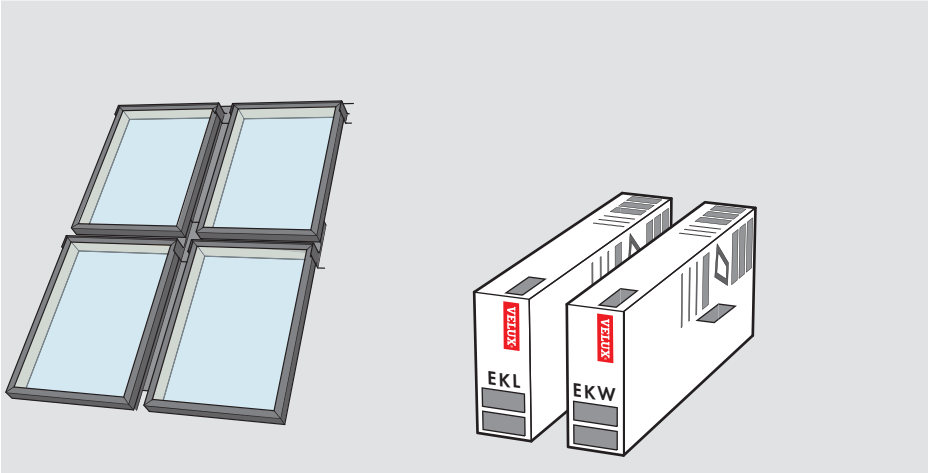

ENGLISH: For flashing information, see instructions supplied with the relevant flashing.

ESPAÑOL: Para obtener información sobre el tapajuntas, consulte las instrucciones provistas con el tapajuntas pertinente.

FRANÇAIS : Pour des informations sur les solins, veuillez vous référer aux instructions fournies selon les différents types de solins.

VELUX®

ENGLISH:
Home owner information
Please complete and give to home owner.

Date: .....
Product number: .....
Quantity: .....
Flashing: .....
Accessories installed: .....
Model ..... Size ..... Variant code .....
Roofing material: .....
Installation contractor: .....
Dealer purchased from: .....

ESPAÑOL:
Información del propietario
Completar y entregar al propietario.

Fecha: .....
Número de producto: .....
Cantidad: .....
Tapajuntas: .....
Accesorios instalados: .....
Modelo ..... Tamaño ..... Código de variante .....
Material de cubierta: .....
Instalador: .....
Distribuidor al que se compró el producto: .....

FRANÇAIS :
Information pour le propriétaire occupant
Veuillez compléter et remettre au propriétaire occupant.

Date : .....
Numéro de produit : .....
Quantité : .....
Solin : .....
Accessoires installés : .....
Modèle ..... Dimension ..... Code .....
Matériel de toiture : .....
Entrepreneur en installation : .....
Détaillant : .....

USA: VELUX America Inc.
1-800-88-VELUX

CDN: VELUX Canada Inc.
1 800 88-VELUX (888-3589)
www.velux.com

FS DECK MOUNTED SKYLIGHT INSTALLATION INSTRUCTIONS. ©2009, 2010 VELUX GROUP ®VELUX AND THE VELUX LOGO ARE REGISTERED TRADEMARKS USED UNDER LICENCE BY THE VELUX GROUP
INSTRUCTION D'INSTALLATION DU PUITS DE LUMIÈRE FS À CADRE INTÉGRÉ MONTÉ DIRECTEMENT SUR LA TOITURE. ©2009, 2010 VELUX GROUP ®VELUX ET LE LOGO VELUX SONT DES MARQUES DE COMMERCE DÉPOSÉES ET EMPLOYÉES SOUS LICENCE DE VELUX GROUP

Installation Instructions and Guidelines for Glasliner FRP Panels

Read all instructions before installation. Glasliner FRP panels should only be installed over solid wall surfaces (standard drywall, standard plywood, standard OSB, cement board, cement, etc.) Consult your adhesive manufacturer for recommendations for non-standard substrates.

Inspection, Storage, and Preparation

Panels should be inspected in a well lit area promptly upon receipt to ensure material suitability. Do not store panels outdoors. Panels should only be stored in a dry area. Promptly unwrap and remove panels from skid and stack on a flat, dry surface. Ensure that the climate of the room, the panels, and the adhesive are all above 50°F before and during installation. Avoid large temperature changes for at least 24 hours after installation is complete. Normal fire-safety precautions should be taken during storage and installation of panels.

Panels are inspected for defects prior to shipment, and should be re-inspected by the installer prior to installation. If panels are not acceptable, contact Glasteel customer service prior to installation. Glasteel is not responsible for installation or removal costs of unacceptable panels.

Tools

Panels can be cut using power saws with a fine carbide tip blade or masonry blade. Panels may be drilled for fastening with a metal drill bit. Masonry bits are recommended when drilling in concrete.

Caution: Protect eyes with goggles and cover mouth with a filter mask when cutting Glasliner panels.

Use a trowel recommended by the adhesive manufacturer to apply adhesive to the back side of the panel.

A laminate roller is recommended to remove air pockets and ensure adhesion of the surface area.

Adhesives & Fasteners

The use of a specifically formulated FRP adhesive is recommended when installing Glasliner FRP panels. Follow the adhesive manufacturer's instructions carefully. Many adhesives are flammable and some may not be compatible with paneling.

Glasliner FRP panels may be successfully installed using only adhesive on typical even surfaces. Installation over uneven surfaces using adhesive only may cause adhesion failure.

Mechanical fasteners may be used in certain non-typical applications. If mechanical fasteners are used, they should be non-corroding (i.e. plastic pin rivets, chrome pin rivets, one piece nylon rivets, and stainless screws, etc.). Follow the fastener manufacturer's instructions carefully.

Moldings

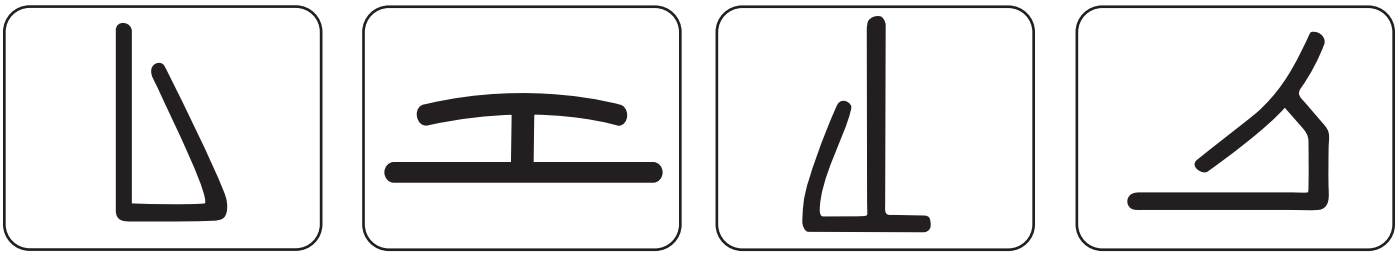

Cap | Divider Bar | Outside Corner | Inside Corner

Preparation of Substrate

Ensure that the substrate is flat with even surfaces. High and low areas should be leveled prior to installation. Remove any foreign material or debris that could interfere with proper bonding of the adhesive. (Caution: *Installation over uneven surfaces could result in adhesive failure, resulting in de-lamination of the panel*.)

- **Non-Porous Surfaces:** Non-porous surfaces are not a favorable surface for adhesive to bond, as most adhesives will not dry properly. Consult adhesive manufacturer for specific recommendations. *Examples: Metal Panels, Ceramic Tiles, Glazed Block, other Moisture Resistant Substrates*

- **New Gypsum Board:** A finish coat is not recommended. Using a setting compound, joints need only a fill and taped coating.

- **Plywood:** Warped Plywood should be removed and replaced with plywood that is flat and even. Consult adhesive manufacturer on any installation over pressure treated or fire-rated plywood.

- **Concrete Block and Brick:** Concrete block and brick walls are typically uneven. It is recommended that furring strips be applied to the concrete block or brick walls and a suitable substrate be installed over the furring strips. Panels may then be installed to the substrate according to installation instructions. (An alternative to this are Glasteel's Laminated FRP Panels.)
  When panels are applied directly to concrete block or brick walls, it is recommended panel be installed with a mechanical fastener. Special care should be given to allow for panel expansion at fastener locations and panel joints, please refer to **FRP Panel Installation Steps** for pre-drilling and panel spacing instructions.
  Consult adhesive manufacturer for recommended adhesive when installing directly to concrete block or brick walls.

- **Painted Surfaces:** Painted surfaces must be abraded or gouged with a heavy grit sand paper to break the barrier of the paint. Painted surfaces will not allow most adhesives to dry properly.
  All loose paint and debris must be removed prior to installation.

Environmental Considerations

- **Service Temperature:** The service temperature range for Glasliner FRP is 0°F to 130°F.

- **Near a Heat Source:** Panels may discolor when installed in proximity to a heat source. Glasteel does not recommend that panels be installed near a heat source that radiates temperatures greater than 130°F (55°C). Examples of heat sources include cookers, ovens, and deep fryers. Stainless steel is recommended in these areas.

FRP Panel Installation Steps

Step 1: Trim panel to fit and create over-sized pilot holes.

Expansion Joint Recommendations			installation of panels over 12′ long is not recommended	
PANEL SIZE	**4X8**	**4X9**	**4X10**	**4X12**
Space around rivets	1/8″	1/8″	3/16″	3/16″

If using a power saw, ensure that the blade enters the front (finished) side of the panel to avoid damage.

Using Fasteners

1. When using rivets, panels should be predrilled allowing for the spacing in the above chart. Holes slightly larger than the fasteners should be drilled into the substrate through the pre-drilled holes in the panel. Do this prior to adhesive application.

2. Apply a silicone sealant prior to inserting fasteners.

3. Fasten panel first in the center and work outward.
   Fasteners should be used 16" on center vertically and horizontally. Fasteners on panel edges should be at least 1" to 1 1/2" from the panel edge when using one piece fasteners. Using two piece moldings, put perimeter holes 1 1/2" to 2" away from the panel edge.

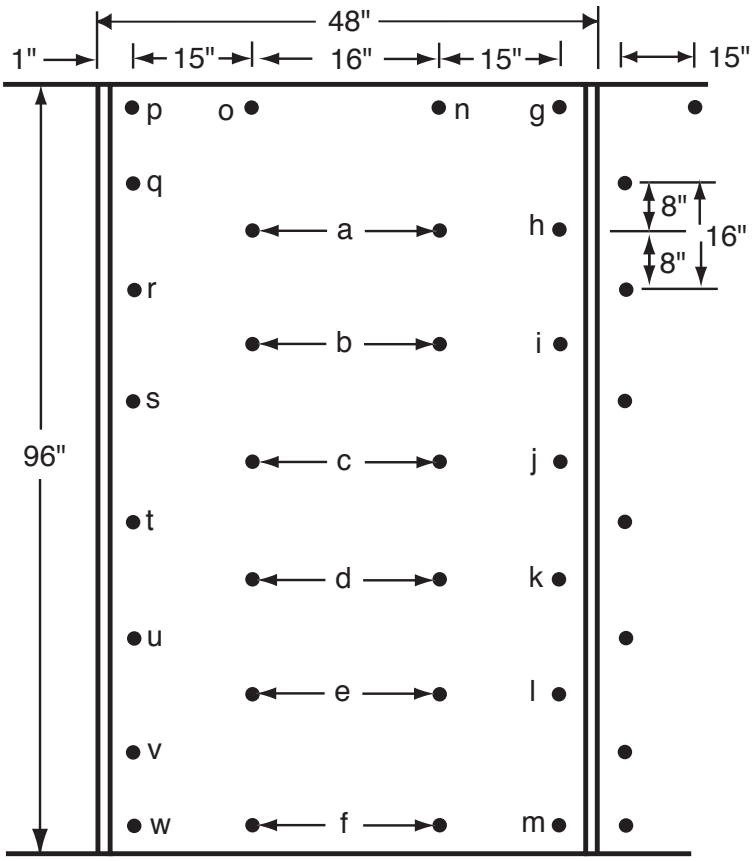

Note: Initiate installation by alphabetic sequence

Step 2: Cut out any fixture openings.

Expansion Joint Recommendations			installation of panels over 12′ long is not recommended	
PANEL SIZE	**4X8**	**4X9**	**4X10**	**4X12**
Space between panels and wall fixtures	1/8″	1/8″	3/16″	3/16″

Step 3: Start at an inside corner of the room. Mark a plumb line 48" + expansion distance (see Step 5 chart) from the corner. The initial panel should be set true with plumb line.

Step 4: Apply FRP adhesive to the back side of the panel using the adhesive manufacturer's recommendations. *Failure to apply adhesive properly may cause de-lamination.*

Step 5: Place panel on the wall, leaving space and the joints for expansion and contraction.

Expansion Joint Recommendations			installation of panels over 12′ long is not recommended	
PANEL SIZE	**4X8**	**4X9**	**4X10**	**4X12**
Gap at ceiling	1/4″	1/4″	3/8″	3/8″
Gap at floor	1/4″	1/4″	3/8″	3/8″
Gap between panel and center of 1 piece molding	1/8″	1/8″	3/16″	3/16″
Gap between panel and center of 2 piece molding	1/4″	1/4″	3/8″	3/8″
Gap between panel not using molding	1/4″	1/4″	3/8″	3/8″

Failure to allow adequate molding spacing may cause delamination

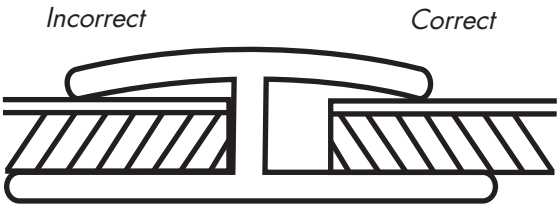

Divider Bar

Step 6: Use of silicone sealant is recommended to achieve a moisture resistant installation. Place silicone sealant into the channel of cut-to-size moldings. Fit coordinating moldings between the joints leaving the recommendations in step 4 to allow for expansion and contraction.
In high moisture and frequent wash-down areas, silicone should be used between moldings and floors/ceilings to prevent moisture from penetrating the back of the panel substrates.

Step 7: Use a laminate roller to remove air pockets. Work from the middle of the panel out to the leading edge.

Step 8: Repeat steps one through seven until project is complete.

Step 9: Clean excess adhesive residue from surface of panels following adhesive manufacturer's recommendations.

Cleaning Instructions
Glasliner FRP Panels are designed for minimum care and maintenance. When cleaning panels, wash with light detergent such as Spic & Span, Pine Sol, Mr. Clean, etc. Panels may also be cleaned with steam, high pressure sprayers, or soap and water. It is strongly recommended not to use abrasive cleaners on panels (i.e., SOS Pads, Ajax, Comet, etc.). Following these instructions, Glasliner FRP Panels will give a fine and lasting appearance for many years.

DISCLAIMER and LIMITATION of Liability: The information contained in this literature is presented in good faith, and is believed to be accurate and reliable at time of publication. No representation, guarantee or warranty is made as to the completeness, reliability or accuracy of this information. This also includes NO IMPLIED WARRANTY OR MERCHANTABILITY OR FUNCTIONAL USE FOR SPECIFIC APPLICATION.

Glasteel™
285 Industrial Drive
Moscow, TN 38057
Phone: (901) 877-3010
Fax: (901) 877-1388
www.glasteel.com

5200 Series Door Closer
Installation Instructions

Grade 1
Meets ANSI A156.4

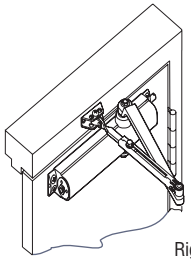

Regular Arm Installation
See Page 2

Left Hand Door - LH
Right Hand Reverse - RHR

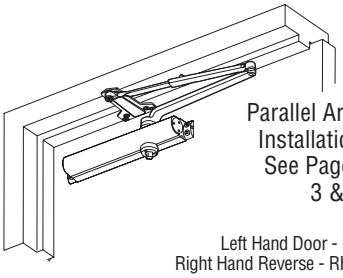

Parallel Arm Installation
See Pages 3 & 4

Left Hand Door - LH
Right Hand Reverse - RHR

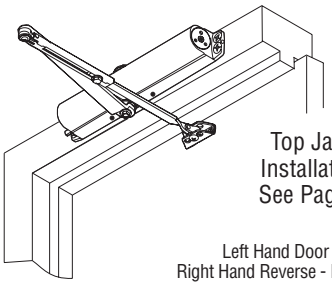

Top Jamb Installation
See Page 5

Left Hand Door - LH
Right Hand Reverse - RHR

CAUTION An incorrectly installed or improperly adjusted door closer can cause property damage or personal injury. These installation instructions should be followed to avoid the possibility of misapplication or misadjustment. **CAUTION**

NOTE: For special applications, a separate door and frame preparation template is packed with these instructions. Use this instruction sheet for installation sequence and closer adjustments only.

- Dimensions are based on standard doors and frames with 1/8" clearance, 5/8" stops, and square edge doors.
- Door and frame must be properly reinforced.
- Non-Handed Door Closers.

NOTE: For Top Jamb Application

A longer connecting rod is required for reveals greater than 4" (102mm)

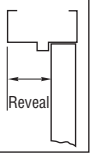

Regular Arm Installation
See Page 2

Right Hand Door - RH
Left Hand Reverse - LHR

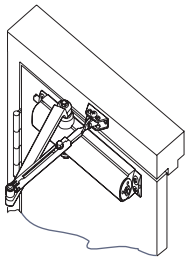

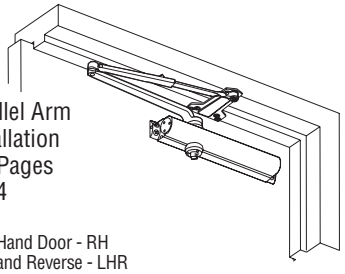

Parallel Arm Installation
See Pages 3 & 4

Right Hand Door - RH
Left Hand Reverse - LHR

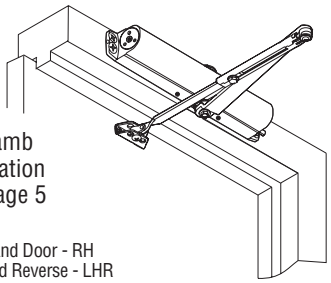

Top Jamb Installation
See Page 5

Right Hand Door - RH
Left Hand Reverse - LHR

- These door closers should **NOT** be installed on the exposed side (weather side) of exterior doors.

TOOLS REQUIRED

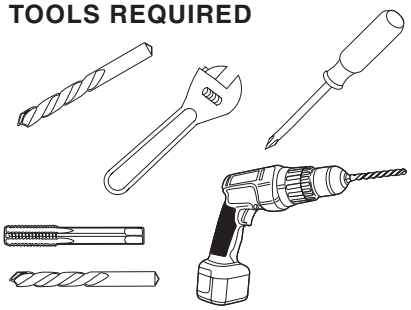

METAL

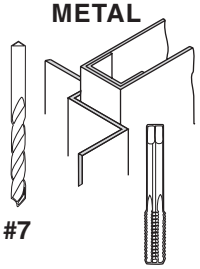

#7

1/4"- 20

WOOD

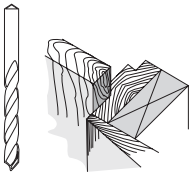

3/16"

Self Drilling Screws Wood and Metal

For wood, drill 3/16" hole

Machine Screws

#7 Drill, 1/4"- 20 Tap

Sleeve Nut and Bolt

Drill 9/32" thru from Closer Side
3/8" Drill other Side

Check building and fire codes to see if your application requires the use of sleeve nuts and bolts.

COMPONENT PARTS

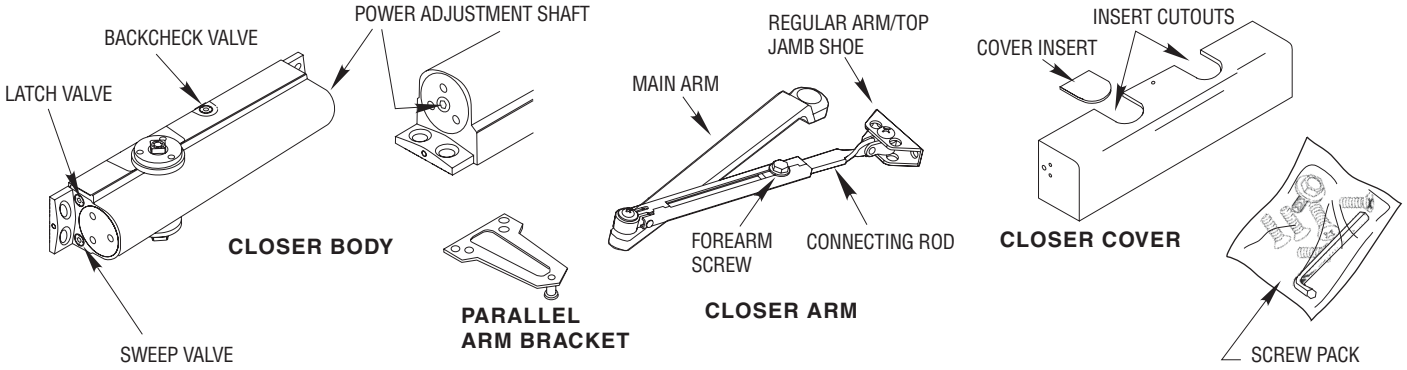

HAGER COMPANIES 139 Victor Street, St. Louis, MO 63104 • (800) 325-9995 • Fax (800) 782-0149

5200 Series Door Closer - Regular Arm
Installation Instructions
Meets ANSI A156.4

1. PARTS

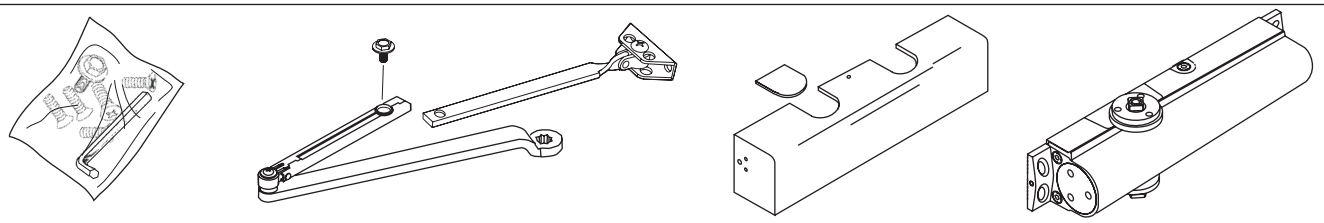

2. MARK AND DRILL HOLES (*Right Hand Shown*)

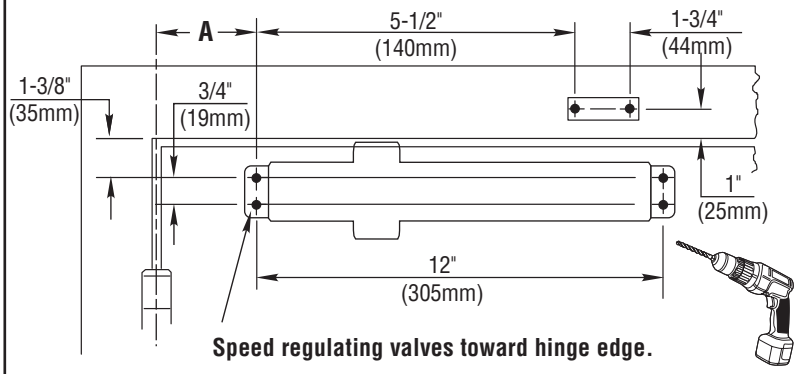

Door Opening	Dimension "A"
To 100	7-1/2" (191mm)
101 to 130	6" (152mm)
131 to *180	4-1/2" (114mm)

*Door/Wall/Hardware/Jamb conditions permitting

Select hand of door and degree of door opening. Fold template on the corresponding line for desired degree of door opening and hand. Match this line with the hinge edge of door and attach template to door. Be sure frame line on template lines up with the bottom edge of frame face. Mark, prep and drill/tap 1/4"-20 holes for closer body and jamb shoe mounting screws.

3. INSTALL CLOSER

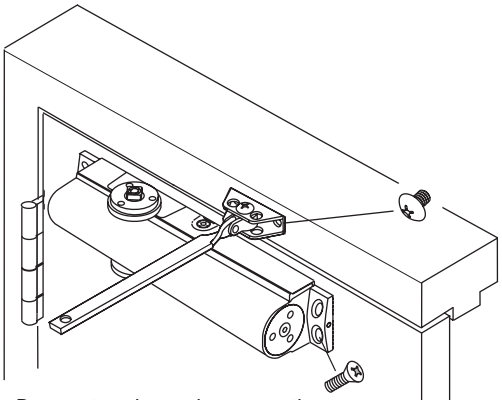

Remove template and use mounting screws to install the closer body to the door and the jamb shoe to the frame. Closer body should be oriented so that the speed regulating valves are toward the hinge stile of door.

4. INSTALL MAIN ARM

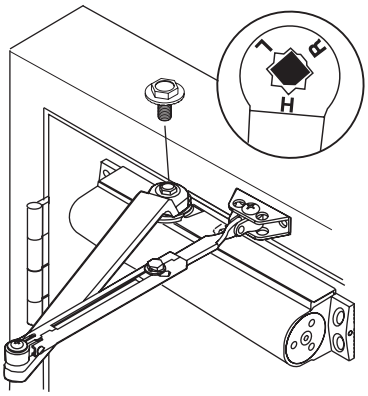

Orient main arm so that the "H", located on the main arm, lines up with the flat on the spindle. Press arm down on spindle and secure with spindle bolt.

5. INSTALL MAIN ARM AND CONNECTING ROD

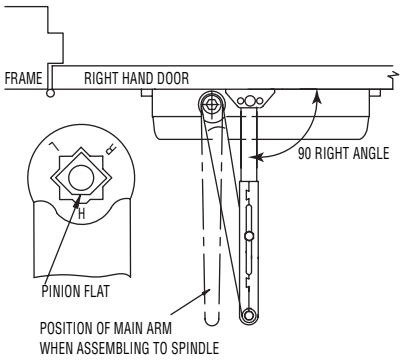

Slide connecting rod into forearm of main arm. Rot n down forearm screw.

6. OPTIONAL HOLD-OPEN ARM

Identify direction of hold-open nut according to hand of door and mount arm.

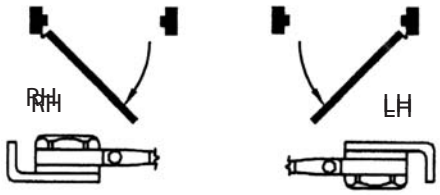

Adjust by loosening hold-open nut, then open door to desired position and tighten hold-open nut securely.

7. ADJUSTMENTS

See Adjustments on Page 6 for setting Spring Power, Sweep Speed, Latch Speed, and Backcheck.

NOTE: Do not fully unscrew valves or hydraulic fluid will leak and closer will no longer be functional.

8. INSTALL COVER

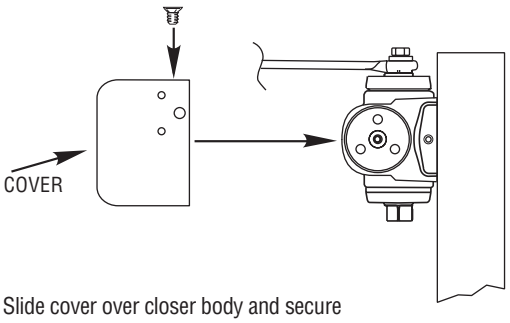

Slide cover over closer body and secure by tightening screws.

HAGER COMPANIES 139 Victor Street, St. Louis, MO 63104 • (800) 325-9995 • Fax (800) 782-0149

5200 Series Door Closer - Parallel Arm
Installation Instructions
Meets ANSI A156.4

1. PARTS

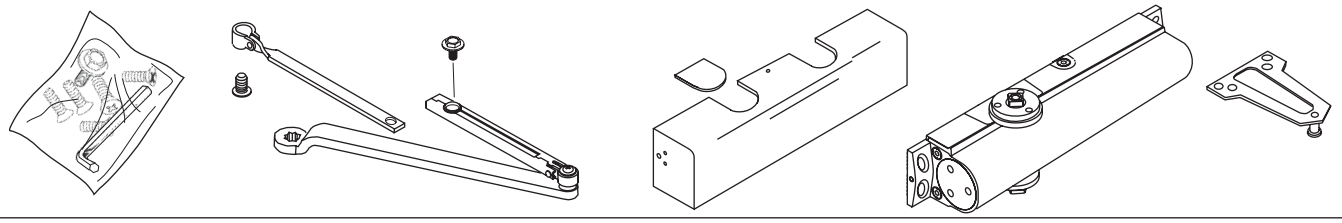

2. MARK AND DRILL HOLES (*Right Hand Shown*)

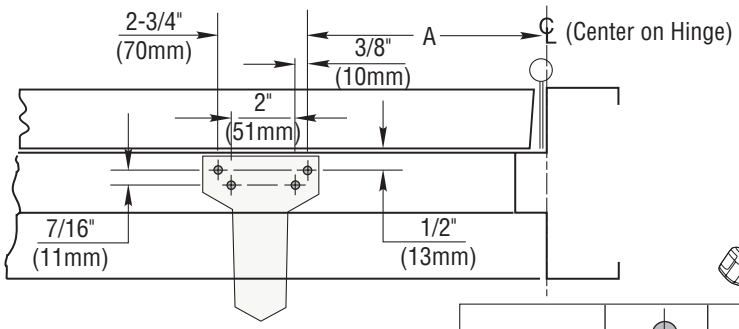

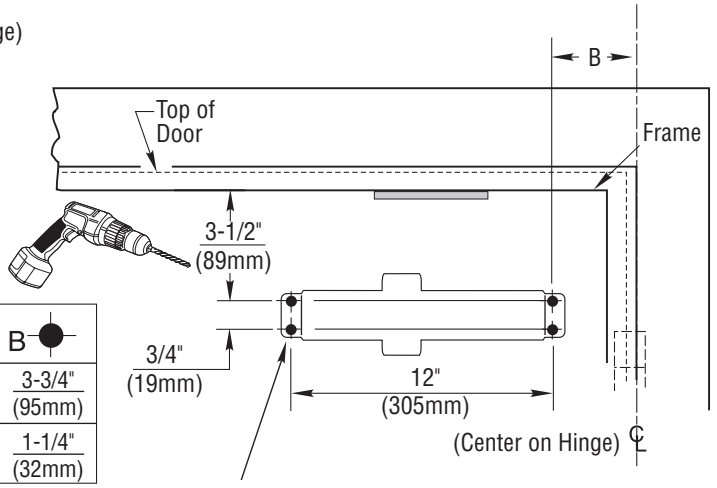

Select hand of door and the degree of door opening. Fold template on the corresponding line for desired degree and hand. Fold or cut upper corner illustrated on template and align template with the hinge edge of door. At the "Frame Stop Line" fold toward you and attach template to door. Mark, prep and drill/tap 1/4"-20 holes for closer body and parallel arm bracket mounting screws.

Door Opening	A	B
To 120	9-1/2" (241mm)	3-3/4" (95mm)
*121 to 180	7" (178mm)	1-1/4" (32mm)

*Door/Wall/Hardware/Jamb conditions permitting

Speed regulating valves toward lock stile.

3. INSTALL CLOSER

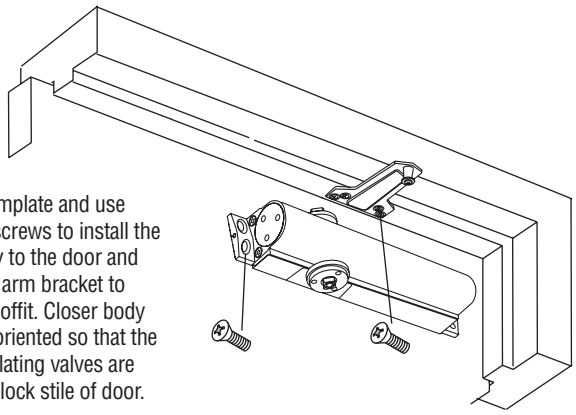

Remove template and use mounting screws to install the closer body to the door and the parallel arm bracket to the frame soffit. Closer body should be oriented so that the speed regulating valves are toward the lock stile of door.

4. INSTALL CONNECTING ROD

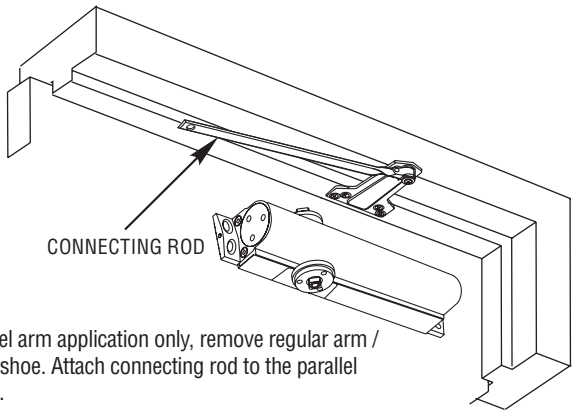

For parallel arm application only, remove regular arm / top jamb shoe. Attach connecting rod to the parallel arm plate.

5. INSTALL MAIN ARM

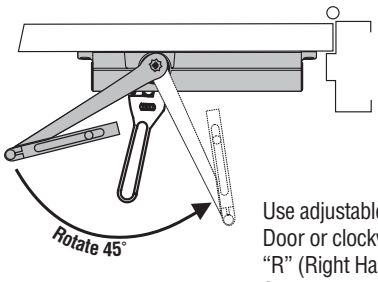

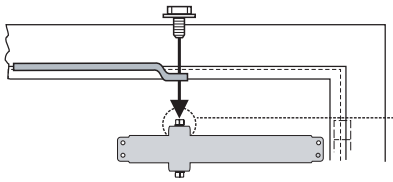

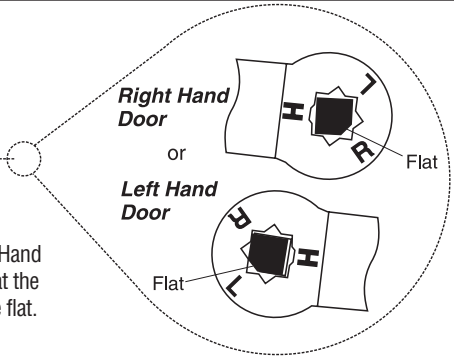

Use adjustable wrench to rotate spindle 45° counterclockwise for Right Hand Door or clockwise for Left Hand Door. Place main arm on spindle so that the "R" (Right Hand Door) or "L" (Left Hand Door) lines up with the spindle flat. Secure main arm and spindle by tightening spindle bolt.

HAGER COMPANIES 139 Victor Street, St. Louis, MO 63104 • (800) 325-9995 • Fax (800) 782-0149

6. INSTALL MAIN ARM AND CONNECTING ROD

a)

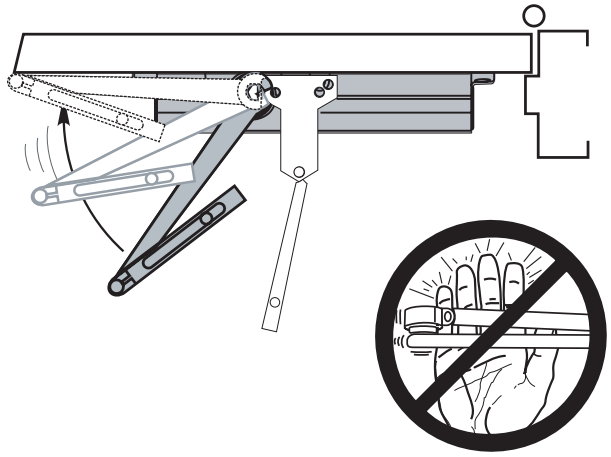

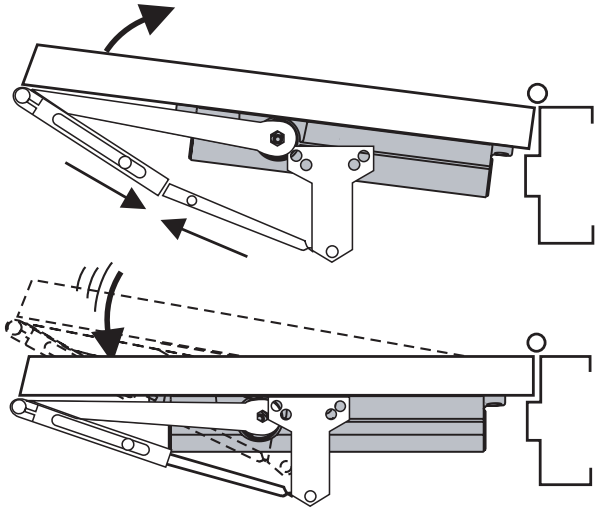

Slide connecting rod into forearm of main arm.

b)

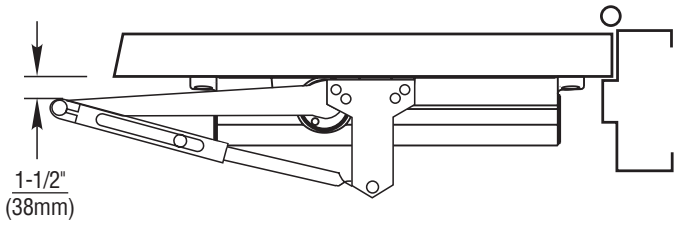

Rotate main arm until the pivot point is 1-1/2" from door surface.

c)

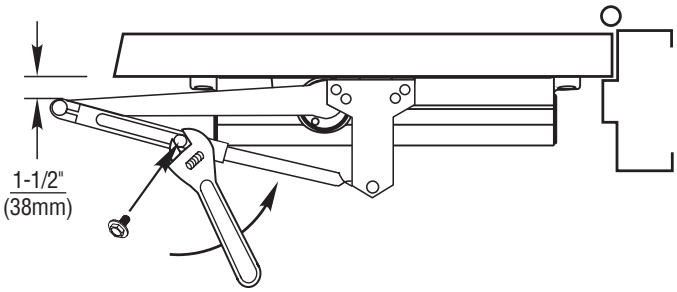

While holding arm in this position, tighten down forearm screw.

7. OPTIONAL HOLD-OPEN ARM

Identify direction of hold-open nut according to hand of door and mount arm.

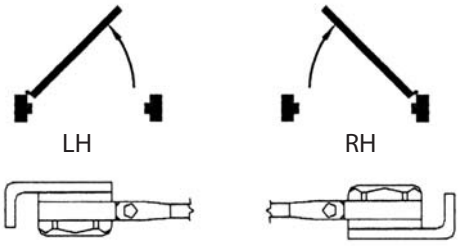

Adjust by loosening hold-open nut, then open door to desired position and tighten hold-open nut securely.

8. ADJUSTMENTS

See Adjustments on Page 6 for setting Spring Power, Sweep Speed, Latch Speed, and Backcheck.

NOTE: Do not fully unscrew valves or hydraulic fluid will leak and closer will no longer be functional.

9. INSTALL COVER

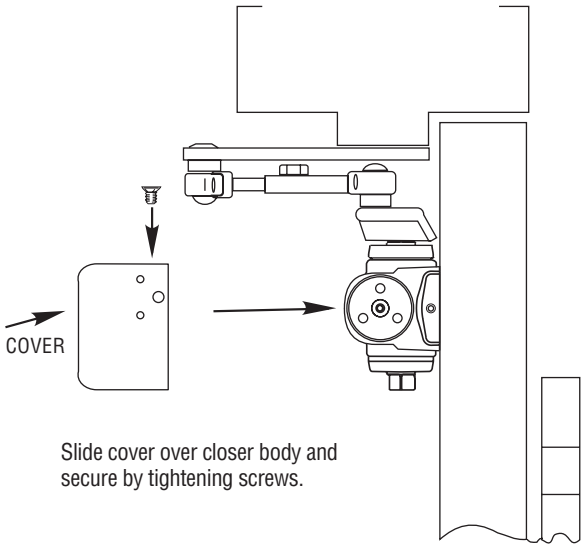

Slide cover over closer body and secure by tightening screws.

5200 Series Door Closer - Top Jamb Arm
Installation Instructions
Meets ANSI A156.4

1. PARTS

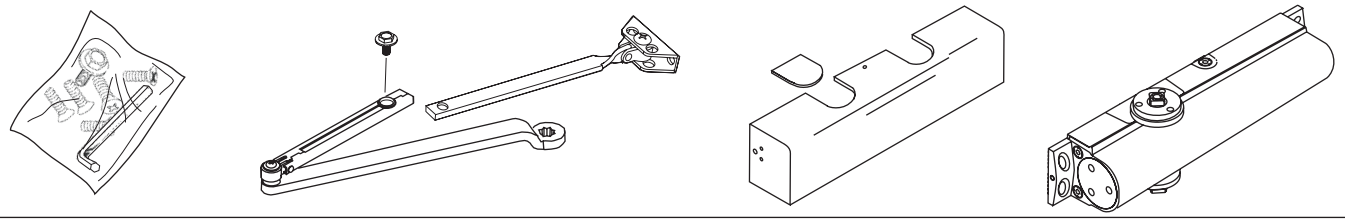

2. MARK AND DRILL HOLES (*Right Hand Shown*)

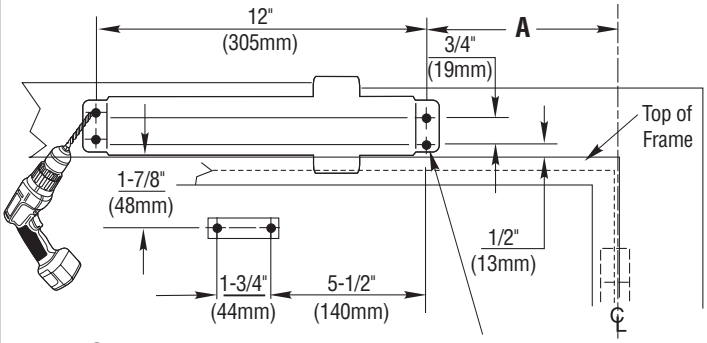

Speed regulating valves toward hinge edge.

Door Opening	Dimension "A"
To 100	7-1/2" (191mm)
101 to 130	6" (152mm)
131 to *180	4-1/2" (114mm)

*Door/Wall/Hardware/Jamb conditions permitting

A longer connecting rod is required for reveals greater than 4" (102mm)

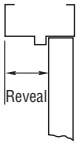

Select hand of door and the degree of door opening. Separate template sections "A" and "B". Fold template on the corresponding line for desired degree and hand. Match this line with the hinge edge of door and attach template to door. Be sure "Frame" line on template lines up with the top edge of door. Using a square, project "Closer Projection Line" on section "A" of template onto frame and use to align and attach section "B". Be sure to align bottom edge of section "B" with edge of frame. Mark, prep and drill/tap 1/4"-20 holes for connecting rod shoe and closer body mounting screws.

3. INSTALL CLOSER

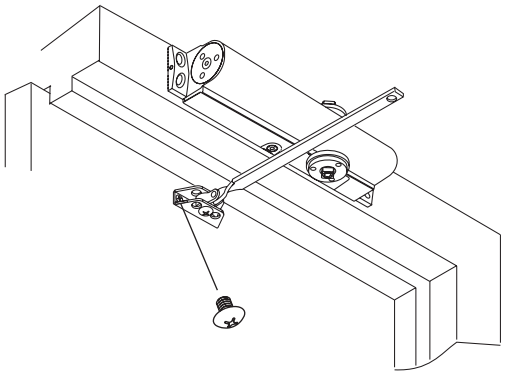

Remove template and use mounting screws to install the closer body to the top jamb and the connecting rod shoe to the door. Closer body should be oriented so that the speed regulating valves are toward the hinge stile of door.

4. INSTALL MAIN ARM

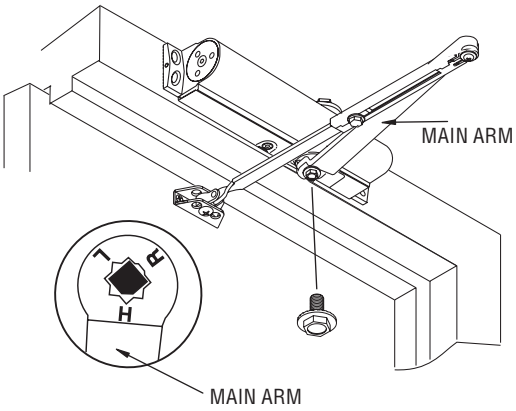

Orient main arm so that the "H", located on the main arm, lines up with the flat on the spindle. Press arm down on spindle and secure with spindle bolt.

5. INSTALL MAIN ARM AND CONNECTING ROD

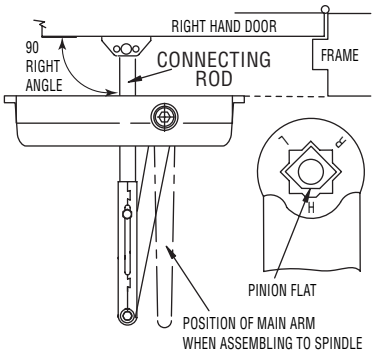

Slide connecting rod into forearm of main arm. Rotate main arm until connecting rod is at a 90˚ angle to frame. While holding arm in this position, tighten down forearm screw.

6. OPTIONAL HOLD-OPEN ARM

Identify direction of hold-open nut according to hand of door and mount arm.

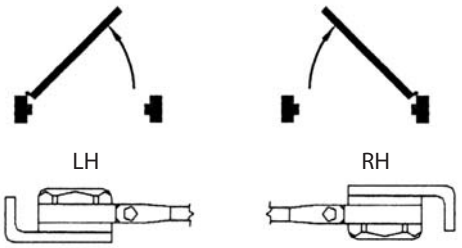

Adjust by loosening hold-open nut, then open door to desired position and tighten hold-open nut securely.

7. ADJUSTMENTS

See Adjustments on Page 6 for setting Spring Power, Sweep Speed, Latch Speed, and Backcheck.

NOTE: Do not fully unscrew valves or hydraulic fluid will leak and closer will no longer be functional.

8. INSTALL COVER

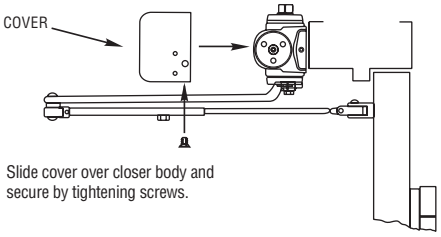

Slide cover over closer body and secure by tightening screws.

HAGER COMPANIES 139 Victor Street, St. Louis, MO 63104 • (800) 325-9995 • Fax (800) 782-0149

ADJUSTMENTS (USE 5/32" HEX WRENCH FOR THESE ADJUSTMENTS)

SWEEP SPEED

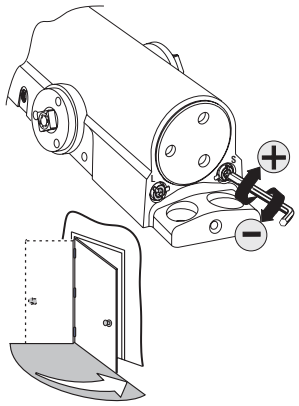

Note: Adjust closing time speed to between 3 and 7 seconds from 90˚ to 0˚. Greater closing times may be required for elderly or handicapped.

LATCH SPEED

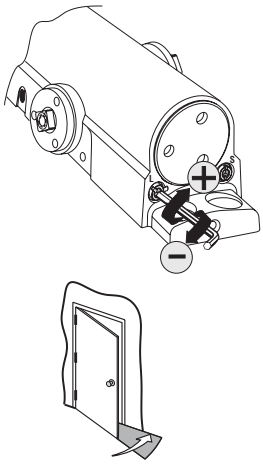

Adjust latch speed so door completely closes and latches.

BACKCHECK

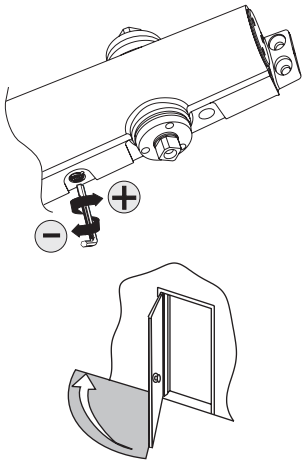

Adjust backcheck accordingly to prevent excessive opening speed.

OPTIONAL DELAY ACTION

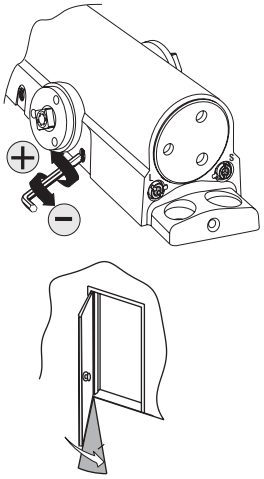

Adjust delay action accordingly to obtain desired delay time.

SPRING POWER ADJUST (Sizing in accordance to BHMA/ANSI 156.4)

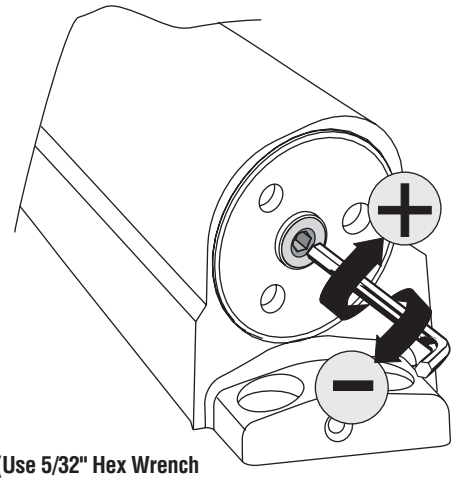

(Use 5/32" Hex Wrench for this adjustment)

TABLE OF SIZES
Closer is shipped set to size 3. To change the closer size, use a hex wrench to rotate the spring power adjust. Follow the chart to make the correct numbers of 360° turns to set the closer size appropriately for the door application.

The number of turns is an approximation and does not account for environmental or door hardware affects.

Approx. 5 turns to increase / decrease one size.

cw = clockwise
ccw = counterclockwise

Exterior (and Vestibule) Door Width

	Minimum Door Width (24")		
	24" (610mm) - 30" (762mm)	30" (762mm) - 36" (914mm)	36" (914mm) - 42" (1067mm)
Regular Arm & Top Jamb	Size 3 (0)	Size 4 (5cw)	Size 5 (10cw)
Parallel Arm	Size 3 (5cw)	Size 4 (10cw)	

Interior Door Width

	Minimum Door Width (24")				
	24" (610mm) - 30" (762mm)	30" (762mm) - 34" (865mm)	34" (865mm) - 38" (965mm)	38" (965mm) - 48" (1219mm)	48" (1219mm) - 54" (1372mm)
Regular Arm & Top Jamb	Size 1 (10ccw)	Size 2 (5ccw)	Size 3 (0)	Size 4 (5cw)	Size 5 (10cw)
Parallel Arm	Size 1 (5ccw)	Size 2 (0)	Size 3 (5cw)	Size 4 (10cw)	

ADJUSTMENT DIAGRAM

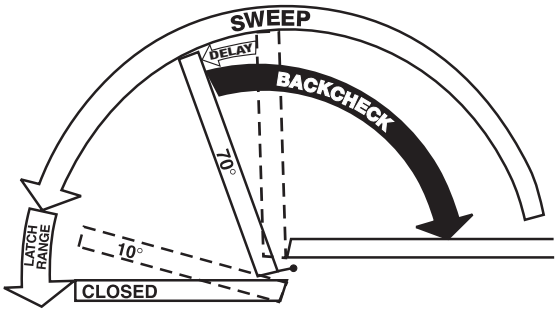

ARM PLACEMENT IN SHOE

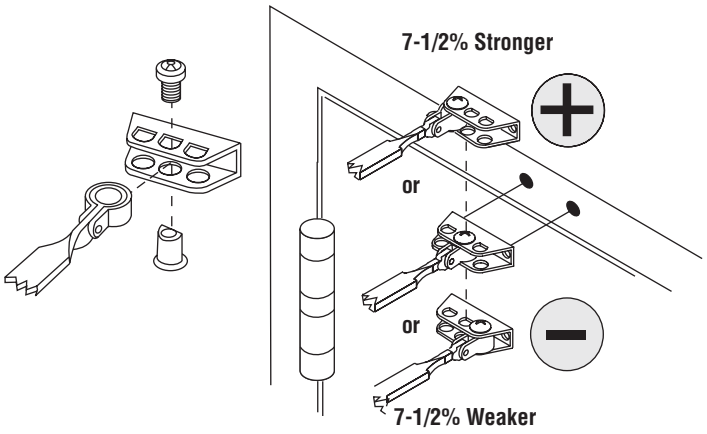

OVERHEAD DOOR®

the original since 1921

ROLLING COUNTER DOOR

FACE MOUNTED/BETWEEN JAMB MOUNTED
SERIES 650, 651 AND 652

READ THESE INSTRUCTIONS THROUGHLY BEFORE ATTEMPTING TO INSTALL THIS DOOR.

SEE DOOR SPECIFICATION SHEET INCLUDED WITH THIS SET OF INSTALLATION INSTRUCTIONS FOR DOOR REQUIREMENTS.

©Overhead Door Corporation

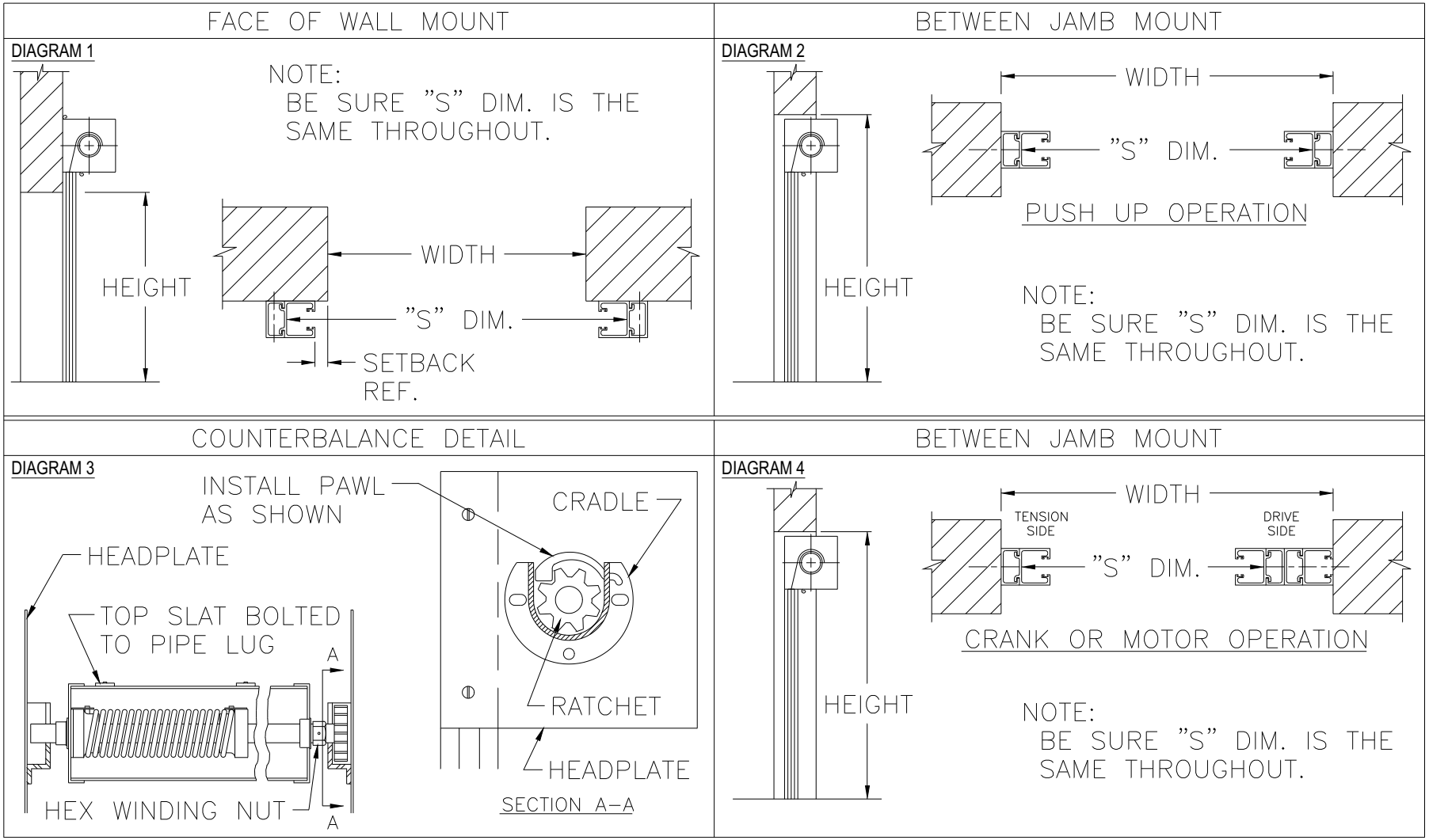

IMPORTANT	TOPS OF GUIDES MUST BE LEVEL WITH EACH OTHER

FACE OF WALL MOUNT

DIAGRAM 1

NOTE:
BE SURE "S" DIM. IS THE SAME THROUGHOUT. SEE BELOW FOR GUIDE SETTING LOCATION, SEE FIGURE 1.

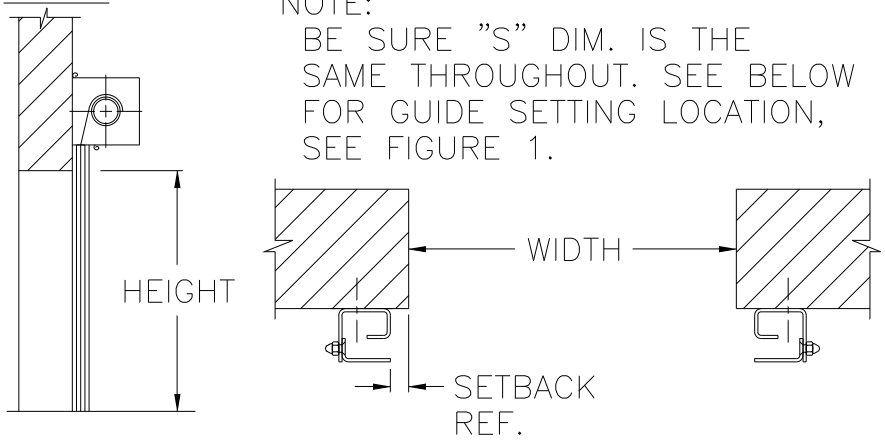

BETWEEN JAMB MOUNT

DIAGRAM 2

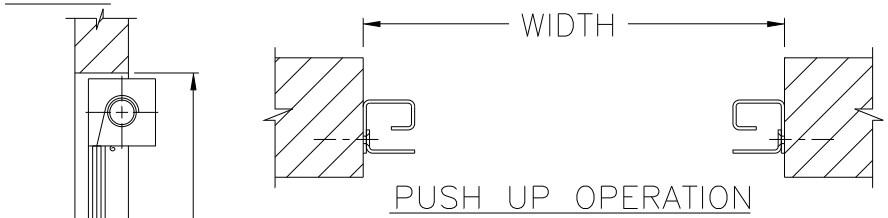

PUSH UP OPERATION

NOTE:
BE SURE "S" DIM. IS THE SAME THROUGHOUT. SEE BELOW FOR GUIDE SETTING LOCATION, SEE FIGURE 1.

COUNTERBALANCE DETAIL

DIAGRAM 3

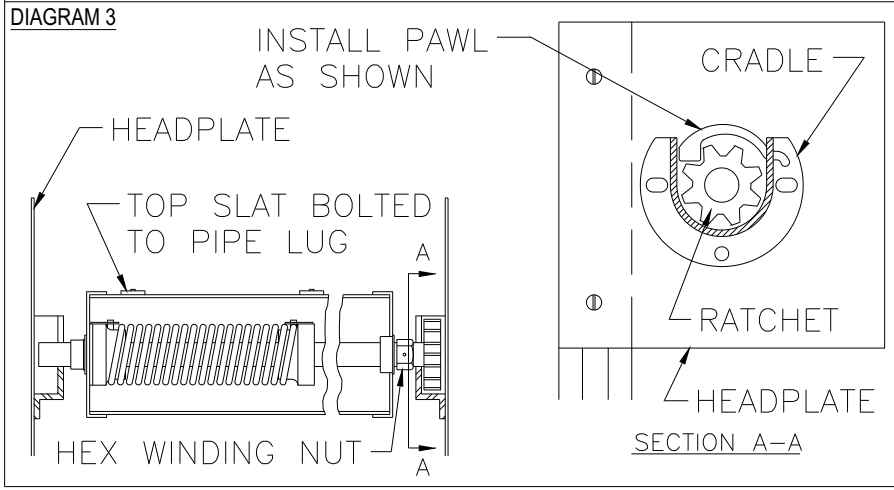

BETWEEN JAMB MOUNT

DIAGRAM 4

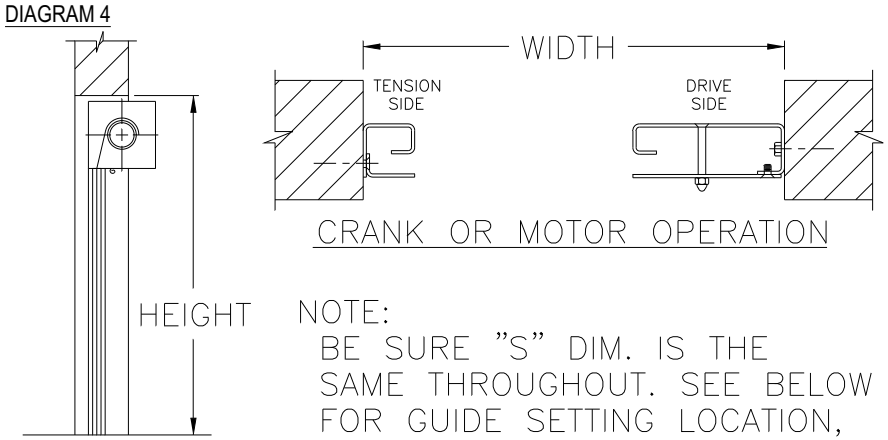

CRANK OR MOTOR OPERATION

NOTE:
BE SURE "S" DIM. IS THE SAME THROUGHOUT. SEE BELOW FOR GUIDE SETTING LOCATION, SEE FIGURE 1 & 2.

IMPORTANT TOPS OF GUIDES MUST BE LEVEL WITH EACH OTHER

FACE OF JAMB GUIDE
LH SHOWN

FIGURE 1

BETWEEN JAMB GUIDE
LH SHOWN

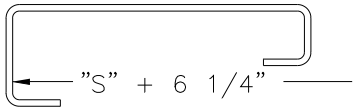

FIGURE 2

FIRST

MEASURE OPENING. DOORS MUST BE INSTALLED AT "S" DIMENSION REGARDLESS OF OPENING SIZE. DO NOT INSTALL DOOR MORE THAN 1/8" OFF IN "S" DIMENSION!!

IF YOU ARE INSTALLING A BETWEEN JAMBS UNDER HEADER DOOR AND OPENING IS LOW BY 1/4", YOU CAN CUT OFF AT BOTTOM OF GUIDES. HOWEVER, SLIDE BOLTS WILL NOT WORK IF YOU REMOVE MORE THAN 1/4".

FASTENER TYPES

GUIDE TYPE	MOUNTING	JAMB TYPE	DRILL SIZE	FASTENER
EXTRUDED ALUMINUM	FACE OF WALL BETWEEN JAMB	WOOD	5/32"	1/4" FLAT HEAD WOOD SCREW
		MASONRY	1/2"	1/4" FLAT HEAD MACHINE SCREW W/ EXPANSION SHIELD
		STEEL	5/32"	1/4" FLAT HEAD MACHINE SCREW
STEEL ROLLED FORMED	FACE OF WALL	WOOD	3/8"	3/8" LAG BOLT
		MASONRY	3/8"	3/8" WEDGE ANCHOR
		STEEL	3/8"	3/8" SELF DRILLING BOLT
STEEL ROLLED FORMED (SMALL GUIDE)	BETWEEN JAMB	WOOD	5/32"	1/4" FLAT HEAD WOOD SCREW
		MASONRY	1/2"	1/4" FLAT HEAD MACHINE SCREW W/ EXPANSION SHIELD
		STEEL	5/32"	1/4" FLAT HEAD MACHINE SCREW
STEEL ROLLED FORMED (LARGE GUIDE BUILD OUT SIDE)	BETWEEN JAMB	WOOD	3/8"	3/8" LAG BOLT
		MASONRY	3/8"	3/8" WEDGE ANCHOR
		STEEL	3/8"	3/8" SELF DRILLING BOLT
STEEL ROLLED FORMED	FACE OF WALL	HOLLOW BLOCK	3/8"	3/8" ALL THREAD W/ CRUSH PLATE

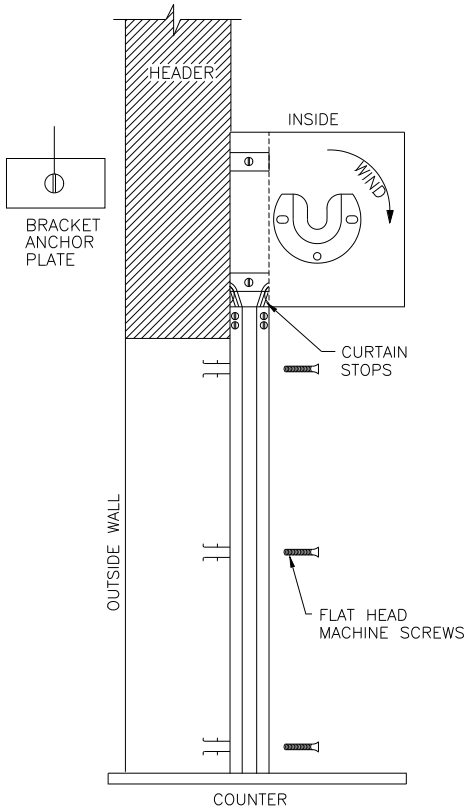

FIGURE 1

STEP 1: Position brackets on guide assemblies (see Figure 2) attaching flat head screws to Hole "A". This will line up brackets flush with guides.

STEP 2: Fasten guides to wall. See Sheet 2 for details.

STEP 3: Drop barrel assembly into cups as shown in Diagram 3, Sheet 1.

STEP 4: Attach curtain. Make sure it is equidistant between brackets.

STEP 5: Lower curtain in guides to fully closed.

STEP 6: Attach curtain stops. (See Figure 3)

STEP 7: Wind (see arrow Figure 1) with clicking device assembled as shown in Section AA (Sheet 2). See specification sheet for approximate clicks.

STEP 8: Attach hood. Do not locate screws near center of bracket.

STEP 9: Test operation of door.

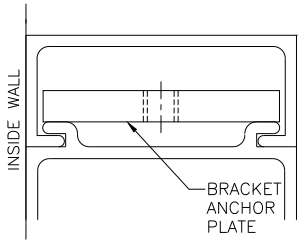

FIGURE 2

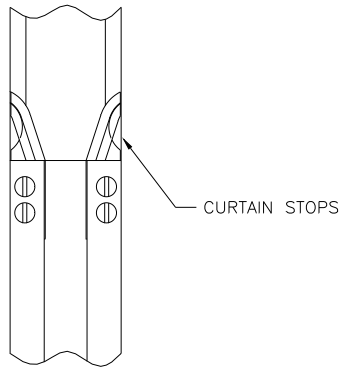

FIGURE 3

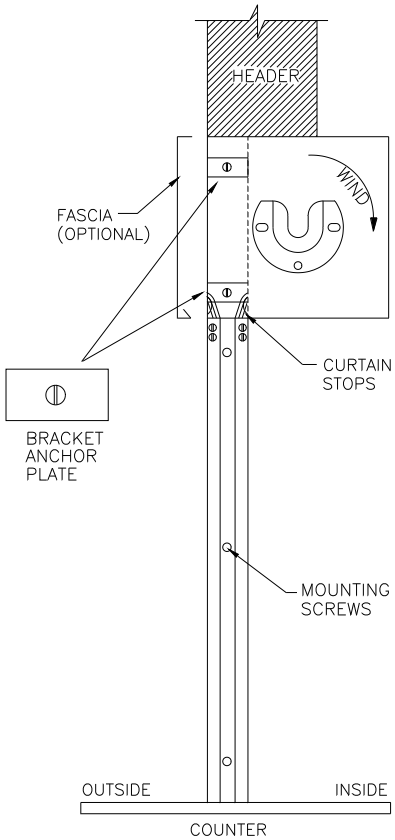

FIGURE 1

STEP 1: Fasten guides to jamb. See Sheet 2 for details.

STEP 2: Drop barrel and curtain assembly into cups as shown Diagram 3, Sheet 1.

STEP 3: Lower curtain in guides to fully closed.

STEP 4: Attach curtain stops. (See Figure 3)

STEP 5: Wind (see arrow Figure 1) with clicking device assembled as shown in Section AA (Sheet 2). See specification sheet for approximate clicks.

STEP 6: Attach hood and fascia. Do not locate screws near center of bracket.

STEP 7: Test operation of door.

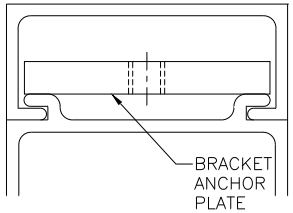

FIGURE 2

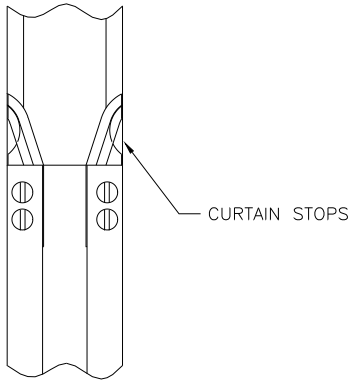

FIGURE 3

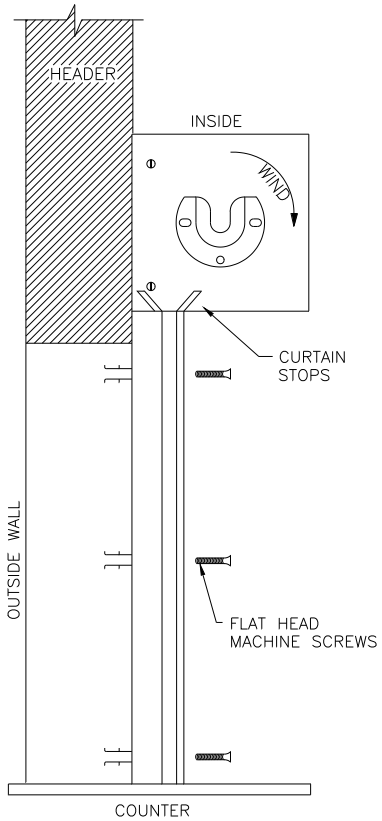

FIGURE 1

STEP 1: Position brackets on guide assemblies (see Figure 2) attaching bolts to Hole "A". This will line up brackets flush with guides.

STEP 2: Fasten guides to wall. See Sheet 2 for details.

STEP 3: Drop barrel assembly into cups as shown in Diagram 3, Sheet 1.

STEP 4: Attach curtain. Make sure it is equidistant between brackets.

STEP 5: Lower curtain in guides to fully closed.

STEP 6: Attach curtain stops. (See Figure 3)

STEP 7: Wind (see arrow Figure 1) with clicking device assembled as shown in Section AA (Sheet 2). See specification sheet for approximate clicks.

STEP 8: Attach hood. Do not locate screws near center of bracket.

STEP 9: Test operation of door.

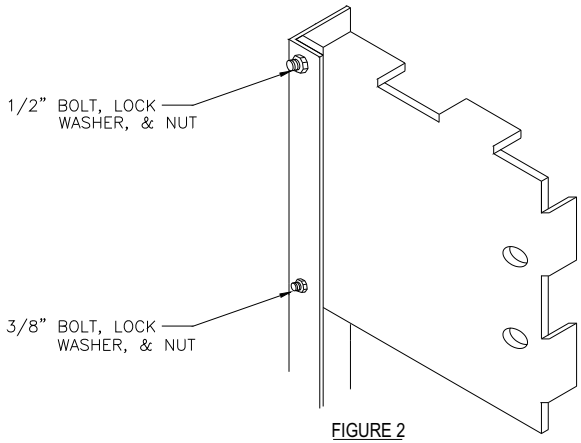

FIGURE 2

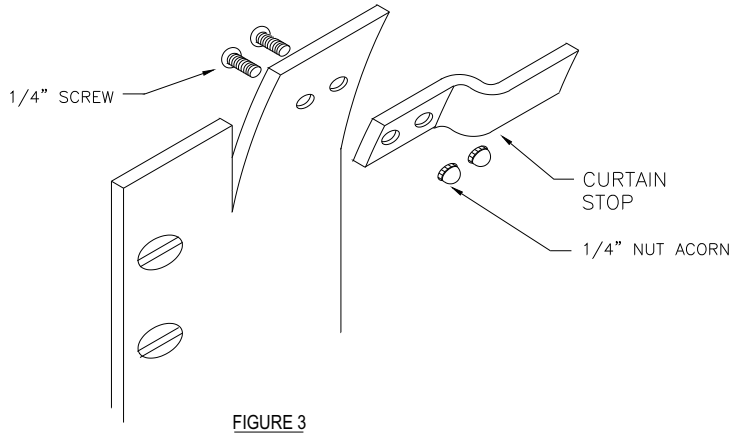

FIGURE 3

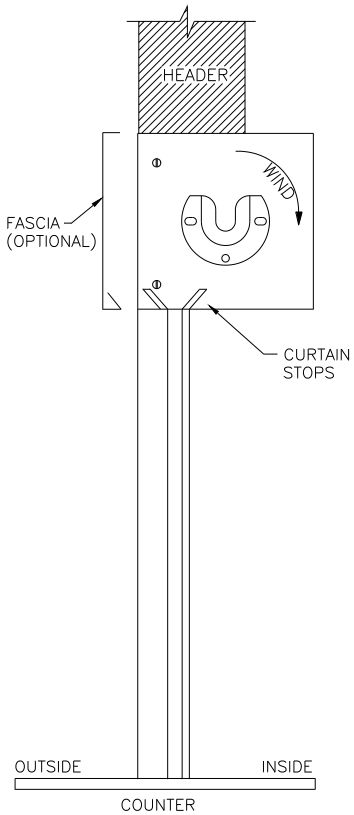

FIGURE 1

STEP 1: Fasten guides to jamb. See Sheet 2 for details.

STEP 2: Drop barrel and curtain assembly into cups as shown Diagram 3, Sheet 1.

STEP 3: Lower curtain in guides to fully closed.

STEP 4: Attach curtain stops. (See Figure 3)

STEP 5: Wind (see arrow Figure 1) with clicking device assembled as shown in Section AA (Sheet 2). See specification sheet for approximate clicks.

STEP 6: Attach hood and fascia. Do not locate screws near center of bracket.

STEP 7: Test operation of door.

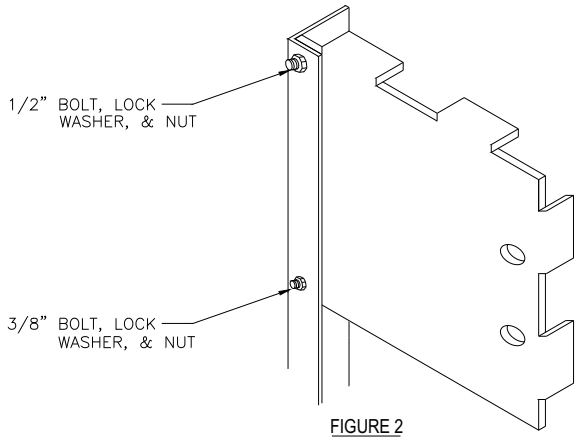

FIGURE 2

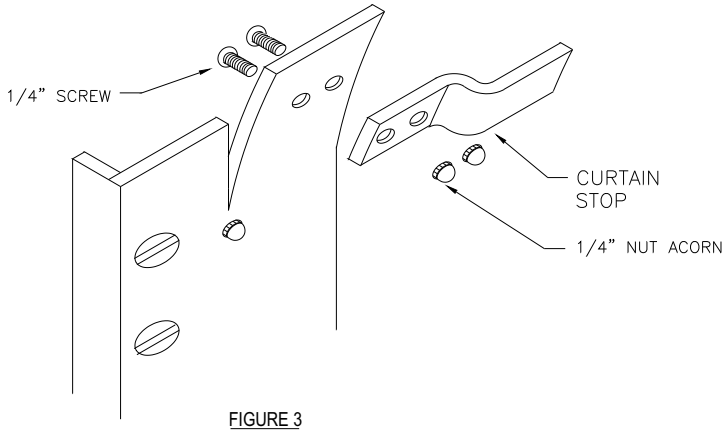

FIGURE 3

COUNTERBALANCE SECTION, LEFT HAND OPERATION SHOWN, VIEWED FROM COIL SIDE

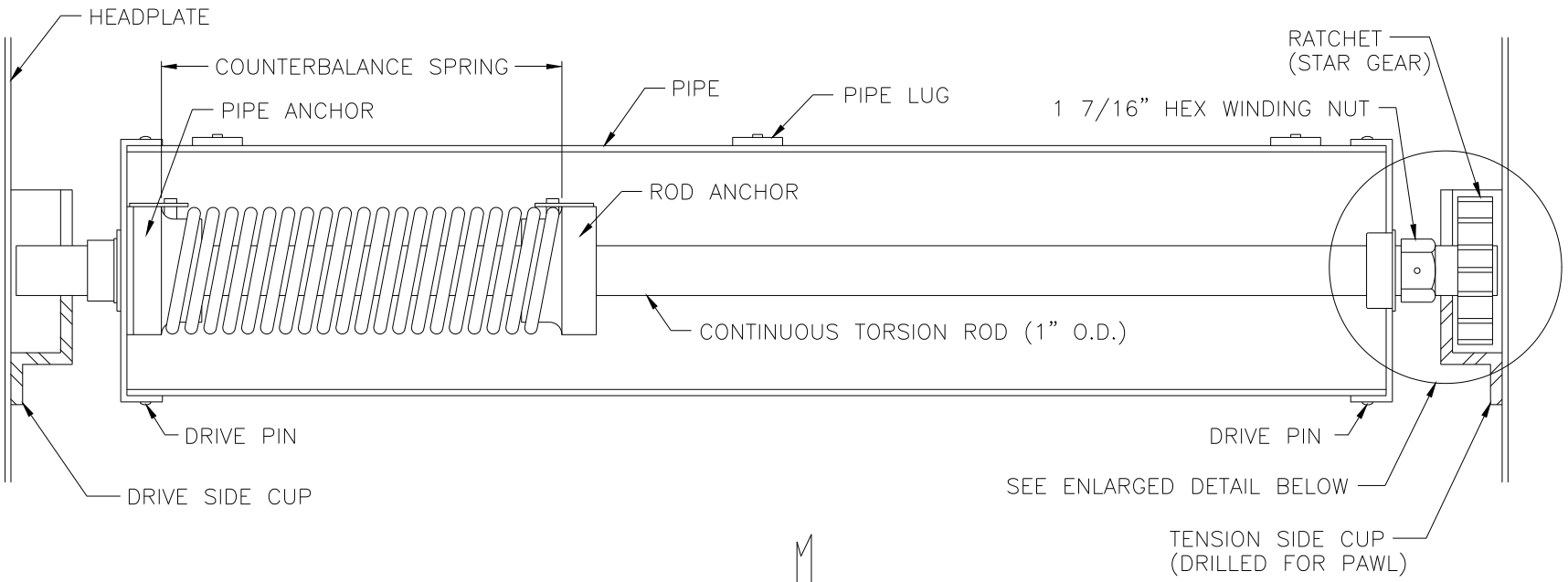

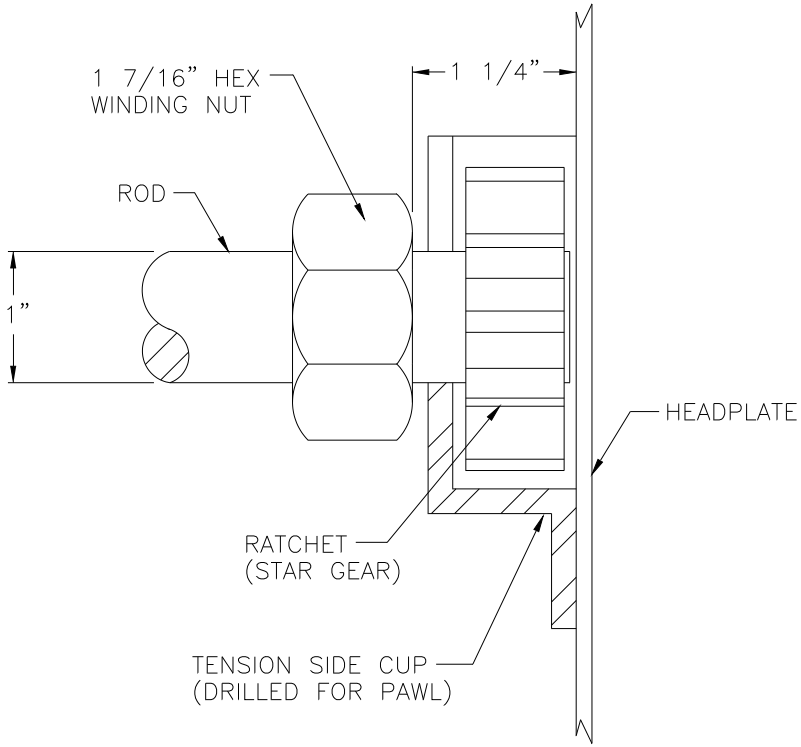

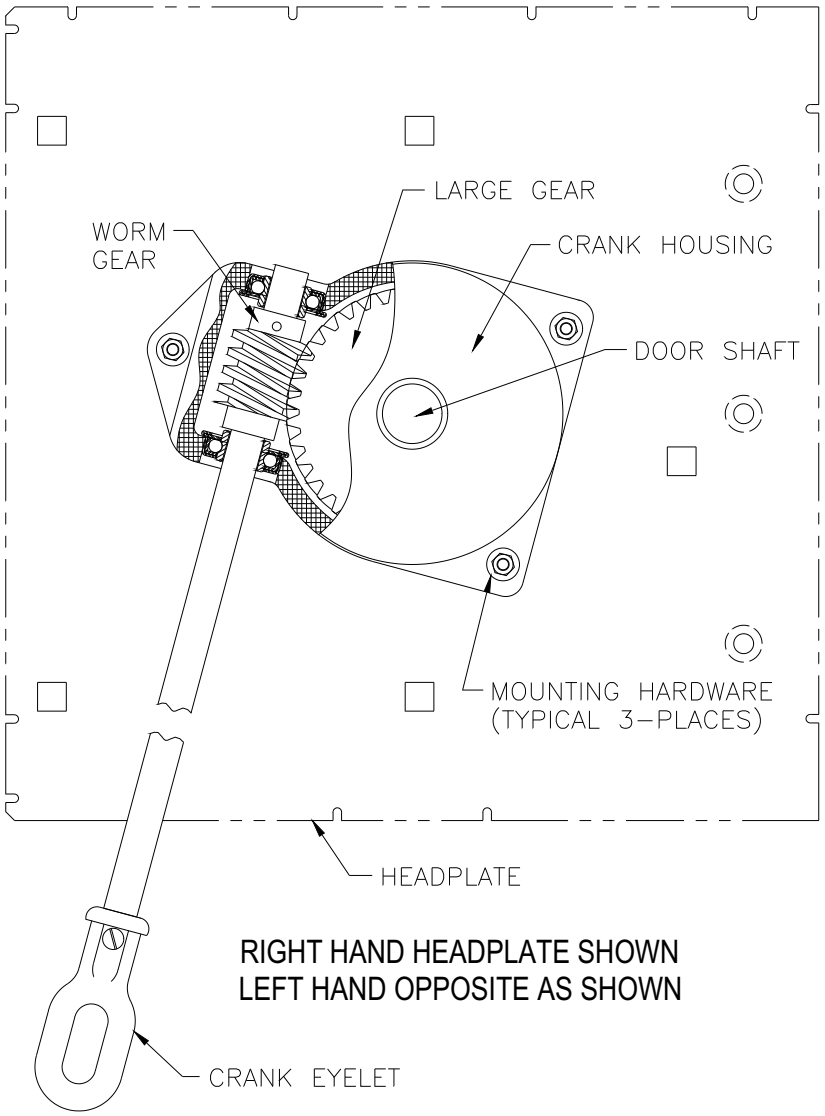

RIGHT HAND HEADPLATE SHOWN
LEFT HAND OPPOSITE AS SHOWN

1. INSTALL LARGE GEAR ON DOOR SHAFT AND INSERT 1/4" KEYSTOCK IN KEYWAY.

2. SLIP CRANK BOX HOUSING ASSEMBLY OVER DOOR SHAFT AND LARGE GEAR.

3. INSERT (3) 1/4-20 FLATHEAD MACHINE SCREWS THROUGH THE HEADPLATE AND CRANK HOUSING (HEADS OF SCREWS MUST BE ON THE INSIDE OF THE HEADPLATE). INSTALL 1/4" WASHER AND NUT AND TIGHTEN ALL SCREWS.

NOTICE

IF BETWEEN JAMBS MOUNT, CUT DOOR SHAFT TO 2 1/4" BEYOND OUTSIDE OF HEADPLATE

1. WHEN HOOD IS SECURELY IN PLACE, REMOVE THE TEMPORARY HEADPLATE BRACES.
2. PLACE 3/8" FLAT WASHERS AND 3/8"-16 KEPS NUTS ON THE 3/8" CARRIAGE BOLTS THAT ARE CLOSEST TO THE WALL. PUT NUTS ON FLUSH WITH THE END OF THE CARRIAGE BOLTS.
3. REMOVE THE CHAIN GUARD AND FRONT COVER FROM THE CDO OPERATOR.
4. SLIDE THE OPEN ENDED SLOTS OF THE CDO FRAME UNDER THE FLAT WASHERS OF STEP 2 AND THEN THE REAR SLOTS OVER THE REMAINING CARRIAGE BOLTS. PUT FLAT WASHERS AND 3/8"-16 KEPS NUTS ON THE REMAINING CARRIAGE BOLTS. DO NOT FULLY TIGHTEN THE 4 NUTS. SEE FIGURE 1. SLIDE OPERATOR TOWARD THE WALL AS FAR AS SLOTS ALLOW.

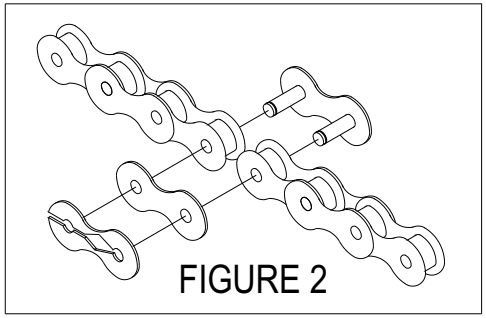

FIGURE 2

NOTE: THE CDO OPERATOR WAS SHIPPED FROM THE FACTORY WITH THE LIMIT SWITCHES SET FOR A FULL OPEN DOOR.

5. PLACE DRIVEN SPROCKET AND KEY ON THE DOOR SHAFT AND ALIGN WITH THE OUTPUT SPROCKET ON THE OPERATOR. SECURE THE SPROCKETS AND KEYS IN PLACE WITH THE SETSCREWS.
6. WRAP THE #41 ROLLER CHAIN AROUND THE TWO SPROCKETS AND INSTALL CONNECTING LINK. (SEE FIGURE 2). PULL OPERATOR AWAY FROM HOOD UNTILL DRIVE CHAIN IS TENSIONED BUT NOT TIGHT AND THEN TIGHTEN MOUNTING NUTS.

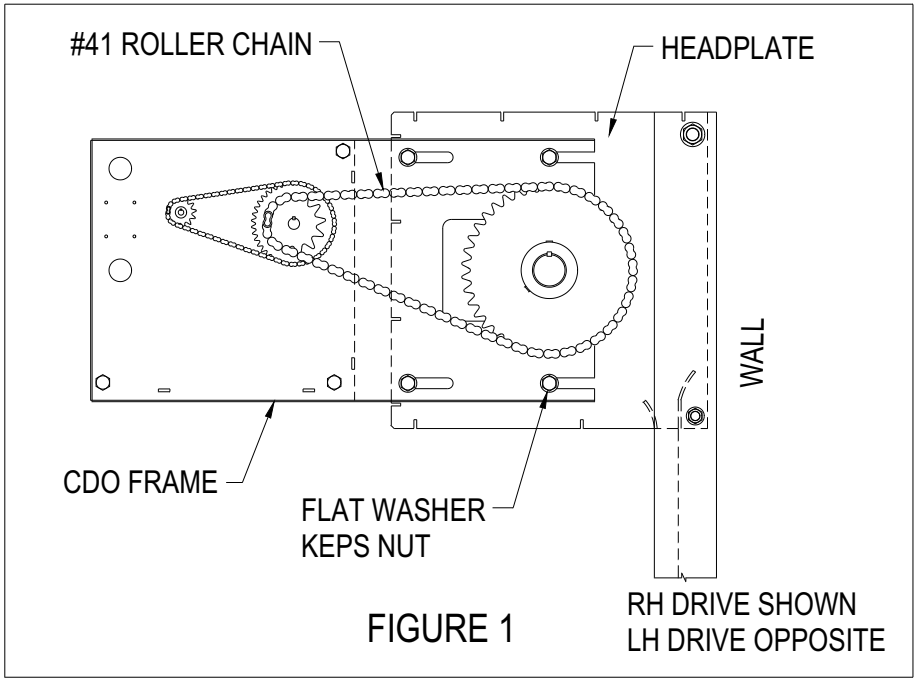

FIGURE 1

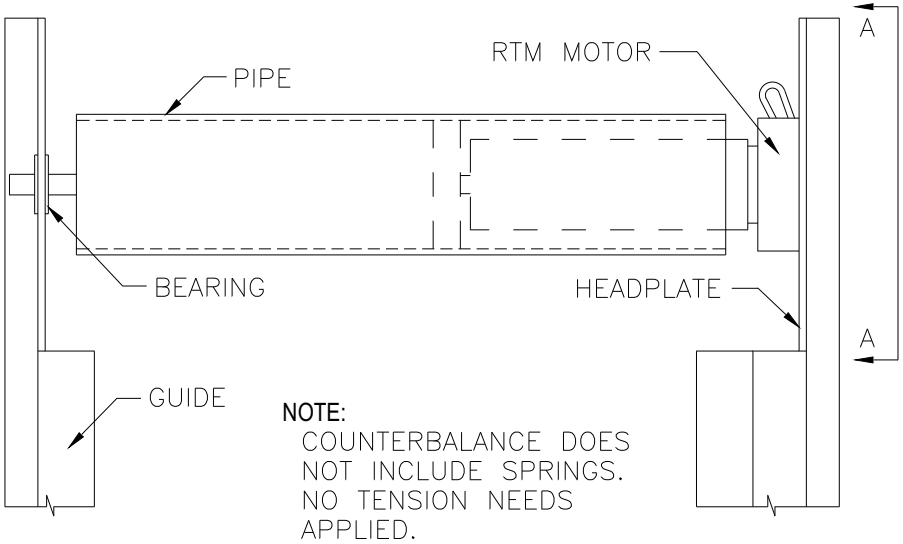

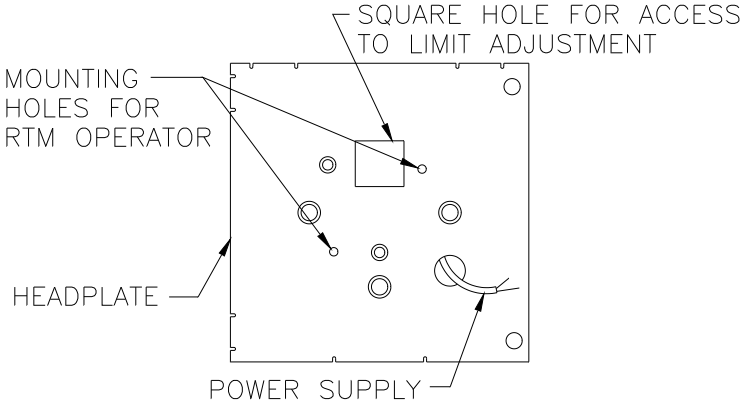

VIEW A-A

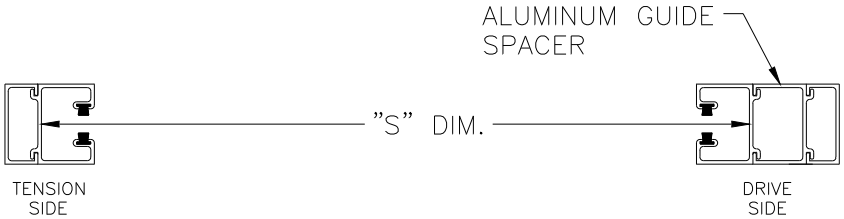

IMPORTANT	TOPS OF GUIDES MUST BE LEVEL WITH EACH OTHER

AMPCO PRODUCTS LLC.

www.ampco.com

Solid Phenolic Core/Evergreen Installation Instructions

Before you begin, please note the following considerations:

Safety First! Please use proper safety gear when performing any installation.

Review all jobsite conditions for any compromises of safety and report all concerns to project superintendents.

Verify that adequate blocking has been installed behind all walls for bracket attachments.

Shop drawings provided will supply all compartment material type, hardware supplied, construction type, compartment widths, depths, ceiling heights, individual component sizes.

You will need the shop drawings to determine centerline dimensions and drilling locations.

Upon receipt of material and shake out, be certain that all items indicated on the hardware packing list and job list are included.

Be sure to review Storage an Handling instructions enclosed for proper storage of this material.

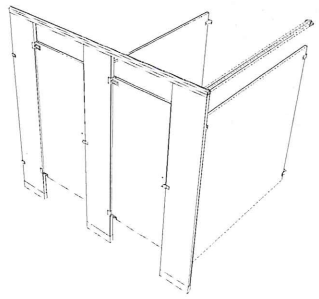

OVERHEAD BRACED

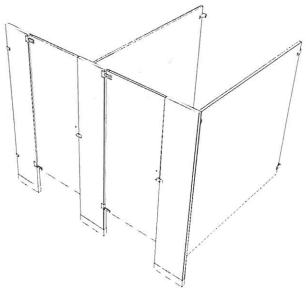

FLOOR MOUNTED

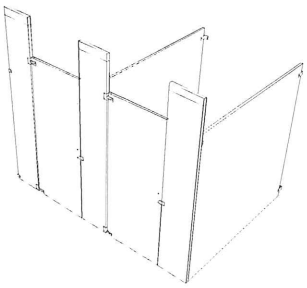

CEILING HUNG

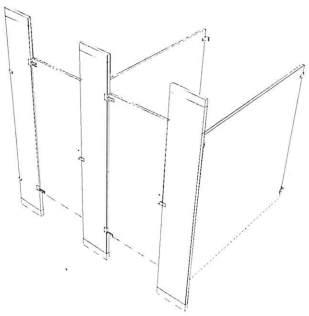

FLOOR TO CEILING

AMPCO PRODUCTS LLC.

www.ampco.com

Recommended Tools

Safety Glasses, Chalk Line, Level, Drill, Center Punch, Screw Drivers, Shims, 12" Support For Panel Installation, (2) 14MM Wrenches, Hammer, Hack Saw, T20 & T27 Security Bits (Included)

Standard Hardware

Alcove Clip

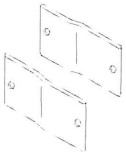

1/2" U - Bracket

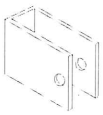

1/2" F - Bracket

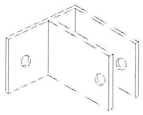

3/4" F - Bracket

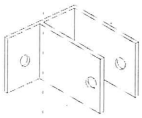

1/2" T - Bracket

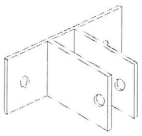

Inswing Keeper

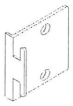

Outswing Strike/Keeper & Inswing Strike

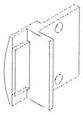

Top Hinge Assembly

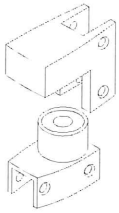

Bottom Hinge Assembly

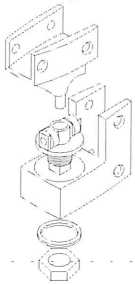

Slide Latch

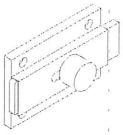

Inswing Coat Hook/Bumper

Outswing Coat Hook

Outswing Door Bumper

Door Pull

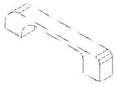

Fasteners

#10 x 5/8" Six Lobe Tap Screw

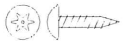

#12 x 7/16" Six Lobe Blunt Screw

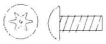

3/8" Shoulder Screw

3/4" Shoulder Screw

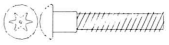

#14 x 5/8" Six Lobe Tap Screw

1/2" Barrel Nut

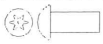

1/2" Shoulder Screw

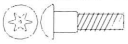

#12 x 2 " Six Lobe Anchor Screw

5/8" Shoulder Screw

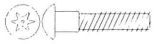

Anchors

3/8" Double Expansion Anchor

3/8" Drop-In Anchor & Setting Tool

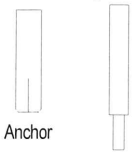

Anchor

Tool (Not Included)

Plastic Anchor

Miami FL 305-821-5700 florida@ ampco.com Sanger TX 940-458-7401 texas@ ampco.com Auburn WA 852-253-5900 washington@ ampco.com

Step 8A - Overhead Braced Stile Installation

- Commercial restroom floors are generally sloped towards floor drain.
- If this is condition exists, begin installation with the stile that will be positioned at the highest point on floor. The height of this stile should be used as reference for the remainder of the stiles to be installed.
- Slide stainless steel shoe over stile, with pre-drilled shoe hole position at top and on the inside of compartment.
- Move stile into position on L-plate and position panel in "U" brackets installed on stile.
- Adjust stile height using leveling bolt if necessary.
- Level and plumb each stile Do Not secure shoe to stile at this point.
- Set desired panel to wall gaps and panel to stile gaps, and proceed to drill mounting holes through panel using a 1/4" drill bit.
- Secure and tighten panel to stile and panel to wall using 1/2" barrel nuts and 3/8" shoulder screw provided.
- Next, overhead bracing must be installed using provided headrail.
- Our headrail is supplied in three different lengths, 65" 98" & 130".
- Using shop drawings, determine lengths required and cut and install headrail where indicated.
- Headrail will be secured to each stile by using (1) #14 x 5/8" tap screw per stile.
- Make final adjustments to door openings following measurements found on shop drawings and secure headrail to top of stile.
- For stiles 18"-24" secure L-Plate to stile using #10 x 5/8" flat head screws through pre-drilled slots.
- Secure shoe to stile by using a 3/16" drill bit to drill through L-plate at shoe hole location and use #14 x 5/8" tap screw to lock in place.
- Secure head rail to building walls where required using HW51SL screw pack provided.
- Install end caps provided where required.

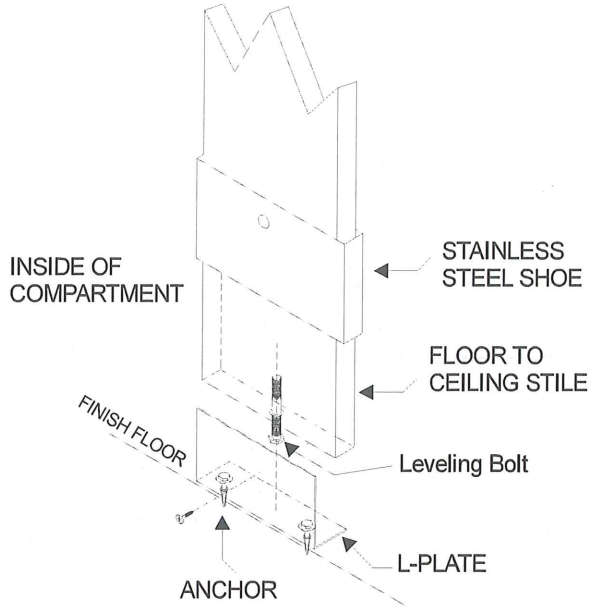

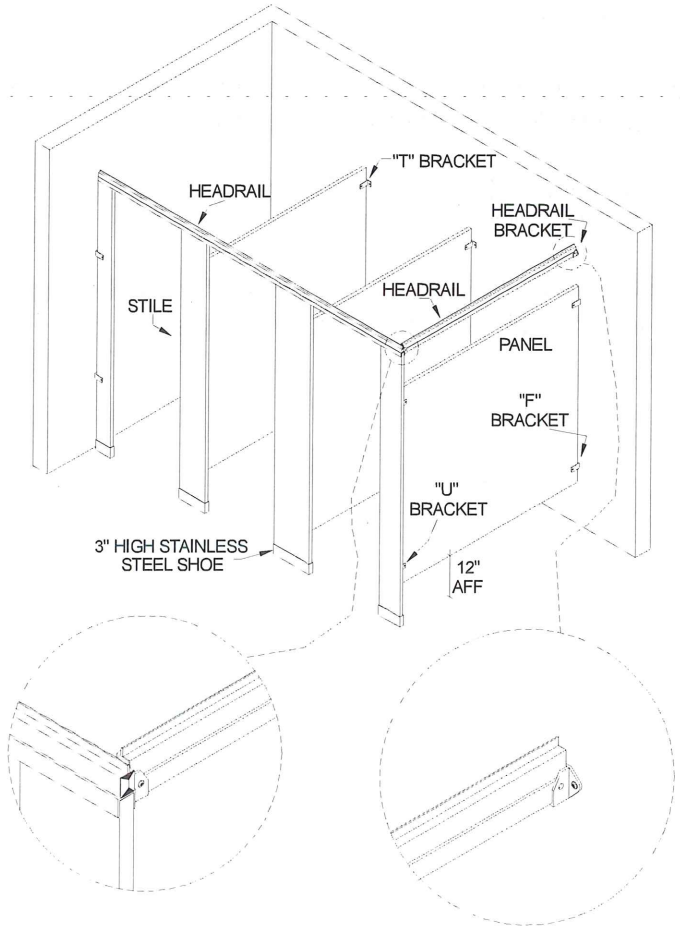

Miami FL 305-821-5700 florida@ ampco.com Sanger TX 940-458-7401 texas@ ampco.com Auburn WA 852-253-5900 washington@ ampco.com

Step 9 - Door Installation

- Doors should be installed @ 12" AFF to match panels as installed.
- Install both top and bottom hinge on door first. Mark holes with hinge in place and drill through doors to receive through bolts using a 1/4" drill bit.
- Secure hinge to door using 3/4"" shoulder screws and 1/2" barrel nuts.
- Using door with installed hinge as a guide, position bottom hinge on stile ensuring that the door bottom will @ at 12" AFF, once secured.
- Mark holes with bottom hinge in place on stile and drill through stile to receive through bolts using a 1/4" drill bit.
- Secure bottom hinge to stile using 3/4"" shoulder screws and 1/2" barrel nuts.
- With door resting on bottom hinge installed, position top hinge on stile, ensure that spacing is set between hinge parts to allow door lift when functional.
- Adjust the roller bearing on the bottom hinge until required door rest position is achieved. Once in place tighten nut to secure.
- Install door latch at required height using #10 x 5/8" six lobe tap screws.
- Install door strike and keeper using 3/4" shoulder screws and 1/2" barrel nuts.
- Set door strike and keeper where emergency access feature is functional, test by lifting door to ensure it clears keeper.
- Where door pulls are required, install using 3/4"" shoulder screws and 1/2" barrel nuts. provided.
- Install coat hook using #10 x 5/8" six lobe tap screws in desired location.
- For out-swing application the door bumper should be installed in desired location using the appropriate fasteners.

In-Swing
Door Hardware

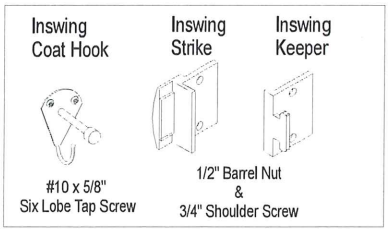

Out-Swing
Door Hardware

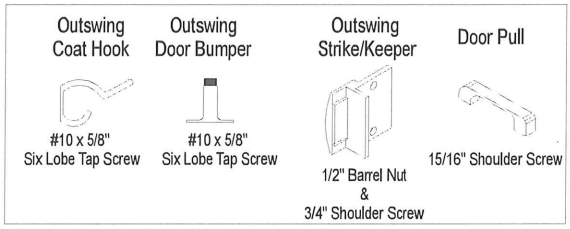

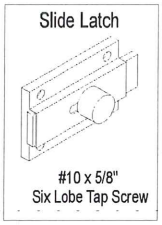

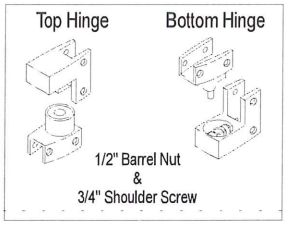

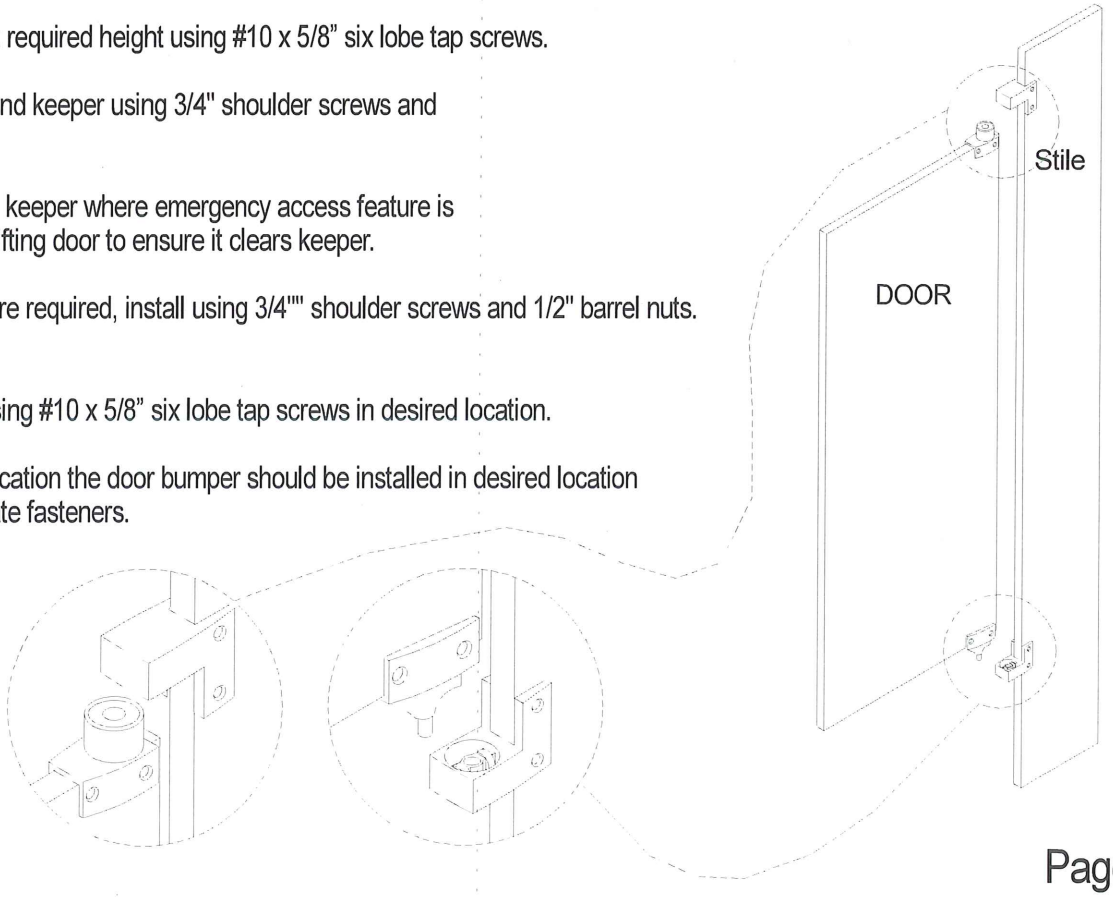

Miami FL 305-821-5700 florida@ ampco.com Sanger TX 940-458-7401 texas@ ampco.com Auburn WA 852-253-5900 washington@ ampco.com

DISCLAIMER OF LIABILITY.

Ampco has no control over the method of installation of the product you have purchased. Ampco has provided written instructions for the installation of the product herein as a guide to the installation process. These instructions are not meant to be all encompassing. There might exist material components of an installation that are not addressed in these instructions. The product must be installed by an experienced, qualified and fully insured installer. Ampco does not maintain any control or dominion over the selection of the installer used to install the product, the method of installation of this product, and does not inspect the product once it has been installed. Therefore, and in light of the foregoing, Ampco assumes no liability and the customer assumes all liability for any damages that result from the improper installation, inappropriate selection of an installer, and/or failure to follow the installation instructions provided herein.

NuTone®

READ & SAVE THESE INSTRUCTIONS!
INSTALLATION INSTRUCTIONS

8″ Vertical Ceiling Fan

MODEL: 8210 SERIES

IMPORTANT SAFETY INSTRUCTIONS

WARNING: TO REDUCE THE RISK OF FIRE. ELECTRIC SHOCK, OR INJURY TO PERSONS, OBSERVE THE FOLLOWING:

A. Use this unit only in the manner intended by the manufacturer. If you have questions, contact the manufacturer.
B. Before servicing or cleaning unit, switch power off at service panel and lock service panel to prevent power from being switched on accidentally.
When the service disconnecting means cannot be locked, securely fasten a prominent warning device, such as a tag, to the service panel.

CAUTION:

For general ventilating use only. Do not use to exhaust hazardous or explosive materials and vapors.

To reduce risk of injury to persons, install at least 7 feet above floor.

INSTALLATION INSTRUCTIONS

WARNING: TO REDUCE THE RISK OF FIRE, ELECTRIC SHOCK, OR INJURY TO PERSONS, OBSERVE THE FOLLOWING:

A. Installation work and electrical wiring must be done by qualified person(s) in accordance with all applicable codes and standards, including fire-rated construction.
B. Sufficient air is needed for proper combustion and exhausting of gases through the flue (chimney) of fuel burning equipment to prevent back drafting. Follow the heating equipment manufacturer's guideline and safety standards such as those published by the National Fire Protection Association (NFPA), and the American Society for Heating, Refrigeration and Air Conditioning Engineers (ASHRAE), and the local code authorities.
C. When cutting or drilling into wall or ceiling, do not damage electrical wiring and other hidden utilities.
D. Ducted fans must always be vented to the outdoors.
E. If this unit is to be installed over a tub or shower, it must be marked as appropriate for the application.
F. NEVER place a switch where it can be reached from a tub or shower.

WARNING: TO REDUCE THE RISK OF A RANGE TOP GREASE FIRE

A. Never leave surface units unattended at high settings. Boilovers cause smoking and greasy spillovers that might ignite. Heat oils slowly on low or medium settings.
B. Always turn hood ON when cooking at high heat or when flambeing food (i.e. Crêpes Suzette, Cherries Jubilee, Peppercorn Beef Flambé').
C. Clean ventilating fans frequently. Grease should not be allowed to accumulate on fan or filter.
D. Use proper pan size. Always use cookware appropriate for the size of the surface element.

WARNING: TO REDUCE THE RISK OF INJURY TO PERSONS IN THE EVENT OF A RANGE TOP GREASE FIRE, OBSERVE THE FOLLOWING

A. SMOTHER FLAMES with a close-fitting lid, cookie sheet, or metal tray, then turn off the burner. BE CAREFUL TO PREVENT BURNS. If the flames do not go out immediately, EVACUATE AND CALL THE FIRE DEPARTMENT.
B. NEVER PICK UP A FLAMING PAN—You may be burned.
C. DO NOT USE WATER, including wet dishcloths or towels — a violent steam explosion will result.
D. Use an extinguisher ONLY if:
   1. You know you have a Class ABC extinguisher, and you already know how to operate it.
   2. The fire is small and contained in the area where it started.
   3. The fire department is being called.
   4. You can fight the fire with your back to an exit.

*Based on "Kitchen Firesafety Tips" published by NFPA.

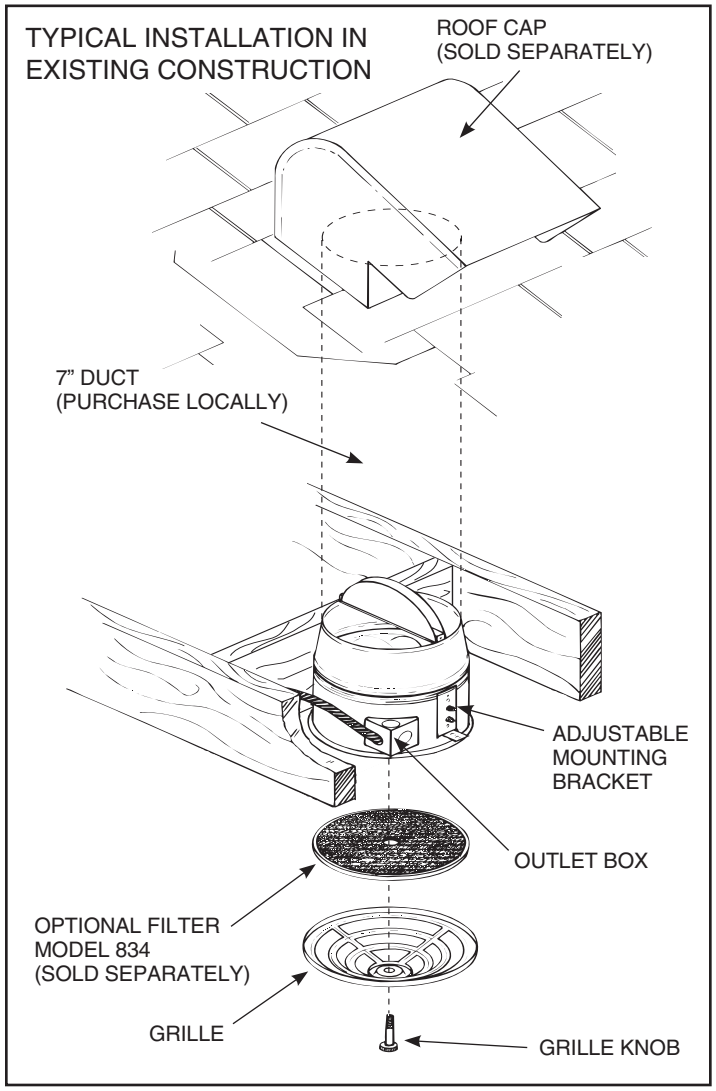

- Do not mount over tub or in shower stall enclosure.
- Suitable for use with solid-state speed control.
- **CAUTION:** To reduce risk of fire and to properly exhaust air, be certain the unit is ducted to the outside. Do not vent exhaust air into spaces within walls or ceiling or into attics, crawl spaces or garages.

- **WARNING:** Disconnect power before servicing.

INSTALLATION IN EXISTING CONSTRUCTION

PREPARING THE INSTALLATION SITE

IMPORTANT: 18" minimum clearance space above ceiling is required.

1. Cut 8⅞" diameter opening in ceiling adjacent to ceiling joist. Install header so that housing can be supported on two sides.
   If opening cannot be located adjacent to joist, install two headers for proper housing support.
2. Disconnect power at circuit breaker. Run house wiring (with ground) from wall switch to fan location.
   IMPORTANT: Be certain all wiring complies with electrical codes and the unit is properly grounded.

MOUNTING THE HOUSING

NOTE: The mounting brackets and hanger bars included with the unit will not be used for installation in existing construction.

1. Remove grille screw, motor bracket assembly and outlet box from the unit.
2. Remove tape from louvers and be certain both damper sections operate freely.
3. Position housing into the cutout. Feed house wiring through the outlet box opening.
   NOTE: The housing must be positioned so that the joist or header will not interfere with installation of the outlet box.
4. Using screws or nails, secure the housing to the joist/header(s) through the keyhole slots provided in sides of housing. Be certain plaster flange is against finished ceiling.
5. Connect 7" ductwork.

MAKING THE CONNECTIONS

1. Remove one of the two side knockouts from the outlet box. Install 7/8" box connector (not supplied). Insert house wiring approximately six inches through box connector and tighten screws to secure. Using wire nuts (not supplied) connect house wiring to receptacle in outlet box cover: black to black and white to white. Secure ground (bare wire) under green ground screw in outlet box.
2. Install outlet box in opening in housing and secure with two short screws provided. Feed all wiring into outlet box and secure cover.

INSTALLATION IN NEW CONSTRUCTION

MOUNTING THE HOUSING

1. Remove grille screw and motor bracket assembly from unit. NOTE: These pieces can be set aside until the finished ceiling is in place.
2. Insert outlet box into housing and secure with two short screws (supplied).
3. Remove appropriate knockout from outlet box and install a box connector.
4. Insert mounting brackets into slots in fan housing.
5. Remove tape from louvers and be certain both damper sections operate freely.
6. Place hanger bars into mounting brackets. Nail hanger bars to joist, adjusting slightly so housing will be held firmly in place. Raise or lower mounting brackets to adjust housing so plaster flange will fit flush to finished ceiling.
7. Connect 7" ductwork.

MAKING THE CONNECTIONS

IMPORTANT: Be certain all wiring complies with electrical codes and the unit is properly grounded. Disconnect power at circuit breaker.

1. Run house wiring (with ground) THROUGH BOX CONNECTOR. Using wire nuts (not supplied) connect house wiring to fan: black to black, white to white. Connect ground wire to green ground screw.
2. Secure junction box cover.

COMPLETING THE INSTALLATION

1. Mount Motor/Blade assembly into housing with plug towards receptacle. Hook keyhole slots in motor mounting bracket over two (2) mounting screws. Tighten screws and plug motor into receptacle. Be certain fan blade spins freely.
2. Place grille over unit and secure with supplied thumbscrew.
3. Re-connect power and check for proper operation.
   NOTE: An optional washable, permanent filter may be used with this fan. If desired, order NuTone Model 834 separately.

MAINTENANCE

- Grille should be cleaned with a mild soap and water solution.
- If the optional filter is used, it may be removed and cleaned in sudsy water. Rinse thoroughly and allow to dry completely before placing into Ceiling Fan. For best results, clean filter frequently.

SERVICE PARTS

MODEL 8210 SERIES

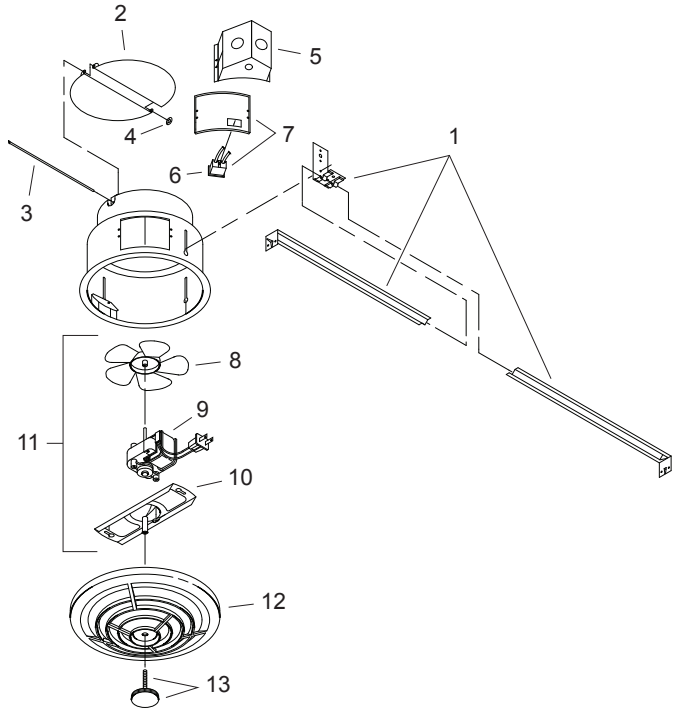

Key No.	Part No.	Description
1	1024B000	Hanger Bar and Mounting Bracket Kit
2	16754000	Damper Half (2 required)
3	16755000	Hinge Rod
4	16756000	Tinnerman Nut
5	11320000	Outlet Box
6	99270982	Plug Receptacle
7	10247000	Outlet Box Cover Assembly (includes Key No. 6)
8	68293000	Fan Blade
9	34417000	Motor
10	17674000	Motor Bracket Assembly
11	16665000	Power Unit Assembly (includes Key Nos. 8, 9, 10)
12	S99111332	Grille
13	97017716	Grille Knob and Stud Kit

One Year Limited Warranty

WARRANTY OWNER: Broan-NuTone warrants to the original consumer purchaser of its products that such products will be free from defects in materials or workmanship for a period of one (1) year from the date of original purchase. **THERE ARE NO OTHER WARRANTIES, EXPRESS OR IMPLIED, INCLUDING, BUT NOT LIMITED TO, IMPLIED WARRANTIES OF MERCHANTABILITY OR FITNESS FOR A PARTICULAR PURPOSE. During this one year period,** Broan-NuTone will, at its option, repair or replace, without charge, any product or part which is found to be defective under normal use and service. THIS WARRANTY DOES NOT EXTEND TO FLUORESCENT LAMP STARTERS OR TUBES, FILTERS, DUCT, ROOF CAPS, WALL CAPS AND OTHER ACCESSORIES FOR DUCTING. This warranty does not cover (a) normal maintenance and service or (b) any products or parts which have been subject to misuse, negligence, accident, improper maintenance or repair (other than by Broan-NuTone), faulty installation or installation contrary to recommended installation instructions.

The duration of any implied warranty is limited to the one year period as specified for the express warranty. Some states do not allow limitation on how long an implied warranty lasts, so the above limitation may not apply to you.

BROAN-NUTONE'S OBLIGATION TO REPAIR OR REPLACE, AT BROAN-NUTONE'S OPTION, SHALL BE THE PURCHASER'S SOLE AND EXCLUSIVE REMEDY UNDER THIS WARRANTY. BROAN-NUTONE SHALL NOT BE LIABLE FOR INCIDENTAL, CONSEQUENTIAL OR SPECIAL DAMAGES ARISING OUT OF OR IN CONNECTION WITH PRODUCT USE OR PERFORMANCE. Some states do not allow the exclusion or limitation of incidental or consequential damages, so the above limitation or exclusion may not apply to you. This warranty gives you specific legal rights, and you may also have other rights, which vary from state to state. This warranty supersedes all prior warranties.

WARRANTY SERVICE: To qualify for warranty service, you must (a) notify Broan-NuTone at the address or telephone number below, (b) give the model number and part identification and (c) describe the nature of any defect in the product or part. At the time of requesting warranty service, you must present evidence of the original purchase date.

Date of Installation

Builder or Installer

Model No. and Product Description

IF YOU NEED ASSISTANCE OR SERVICE - CONTACT:

Broan-NuTone LLC Hartford, Wisconsin www.nutone.com 888-336-3948
Broan-NuTone Canada Mississauga, Ontario www.nutone.ca 877-896-1119

Rev. 08/2007

NuTone®

¡LEA Y CONSERVE ESTAS INSTRUCCIONES!
INSTRUCCIONES DE INSTALACIÓN

Ventilador vertical de techo de 8 pulg.

MODELO: SERIE 8210

INSTRUCCIONES IMPORTANTES DE SEGURIDAD

ADVERTENCIA: PARA REDUCIR EL RIESGO DE INCENDIOS, DESCARGAS ELÉCTRICAS O LESIONES, OBSERVE LAS SIGUIENTES INDICACIONES:

A. Use la unidad sólo de la manera indicada por el fabricante. Si tiene preguntas, comuníquese con el fabricante.
B. Antes de dar servicio o limpiar la unidad, interrumpa el suministro eléctrico en el panel de servicio y bloquee el panel de servicio para evitar que se active accidentalmente la electricidad. Cuando no sea posible bloquear los medios de desconexión del servicio, fije firmemente una señal de advertencia (como una etiqueta) en un lugar visible del panel de servicio.

PRECAUCIÓN:

Sólo para usarse como medio de ventilación general. No debe usarse para la extracción de materiales ni vapores peligrosos o explosivos.

Para reducir los riesgos de causar lesiones a personas, instale este equipo a una altura no menor de 7 pies (2 m) por encima del piso.

INSTRUCCIONES DE INSTALACIÓN

ADVERTENCIA: PARA REDUCIR EL RIESGO DE INCENDIOS, DESCARGAS ELÉCTRICAS O LESIONES PERSONALES, OBSERVE LAS SIGUIENTES PRECAUCIONES:

A. Una o más personas calificadas deben realizar el trabajo de instalación y el cableado eléctrico siguiendo todos los códigos y normas correspondientes, incluso los códigos y normas de construcción específicos para incendios.
B. Se necesita suficiente aire para que se lleve a cabo una combustión adecuada y la extracción de los gases a través del tubo de humos (chimenea) del equipo quemador de combustible, a fin de evitar las contracorrientes. Siga las directrices y las normas de seguridad del fabricante del equipo de calentamiento, como las publicadas por la Asociación Nacional de Protección contra Incendios (National Fire Protection Association, NFPA), la Sociedad Americana de Ingenieros de Calefacción, Refrigeración y Aire Acondicionado (American Society for Heating, Refrigeration and Air Conditioning Engineers, ASHRAE) y las autoridades normativas locales.
C. Al cortar o perforar a través de la pared o del techo, tenga cuidado de no dañar el cableado eléctrico ni otros servicios ocultos.
D. Los ventiladores entubados siempre deben conectarse hacia el exterior.
E. Si este equipo va a ser instalado sobre una tina o ducha, tiene que estar marcado y clasificado como apropiado para dicha aplicación.
F. No coloque NUNCA un interruptor en un lugar alcanzable desde una tina o ducha.

ADVERTENCIA: PARA REDUCIR EL RIESGO DE INCENDIO PROVOCADO POR GRASA PRESENTE EN LA ESTUFA

A. Nunca deje desatendidas las unidades de superficie cuando estén en ajustes altos de calor. Los alimentos en ebullición provocan derrames grasosos y con humo que se podrían inflamar. Caliente el aceite lentamente en ajustes de calor bajo o medio.
B. Siempre ENCIENDA la campana cuando esté cocinando a altas temperaturas o flamee alimentos (por ejemplo crepas Suzette, cerezas Jubilee, bistec con pimienta flameado).
C. Limpie frecuentemente los ventiladores. No se debe permitir la acumulación de grasa en el ventilador ni en el filtro.
D. Use una cacerola del tamaño adecuado. Siempre use utensilios de cocina que sean apropiados para el tamaño del elemento de la superficie.

ADVERTENCIA: PARA REDUCIR EL RIESGO DE LESIONES A PERSONAS EN CASO DE UN INCENDIO PRODUCIDO POR GRASA EN UNA ESTUFA, OBSERVE LO SIGUIENTE

A. APAGUE LAS LLAMAS con una tapa de ajuste exacto, una charola para galletas o una bandeja de metal, y después apague el quemador. PROCEDA CON CUIDADO PARA EVITAR QUEMADURAS. Si las llamas no se apagan inmediatamente, EVACUE EL ÁREA Y LLAME A LOS BOMBEROS.
B. NUNCA LEVANTE UNA CACEROLA INCENDIADA, porque podría sufrir quemaduras.
C. NO USE AGUA, ni tampoco trapos o toallas de cocina mojados: podría producirse una explosión violenta de vapor.
D. Use un extintor SÓLO si:
   1. Sabe que tiene un extintor clase ABC, y ya sabe cómo usarlo.
   2. El incendio es pequeño y está confinado al área en la que se inició.
   3. Se está llamando al Departamento de Bomberos.
   4. Puede combatir el incendio teniendo la espalda orientada hacia una salida.

*Basado en "Kitchen Fire Safety Tips" (Sugerencias para la seguridad contra incendios en la cocina) publicado por NFPA.

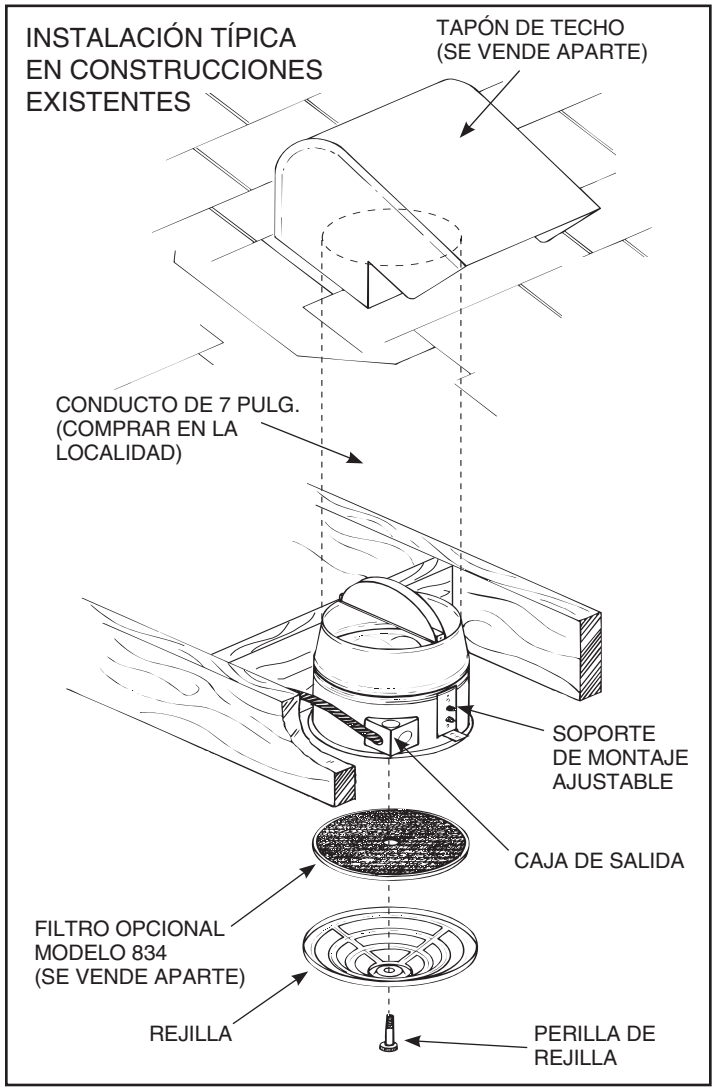

- No instale este equipo sobre tinas ni en duchas.
- Puede utilizarse con un control de velocidad de estado sólido.
- **PRECAUCIÓN:** Para reducir el riesgo de incendio y para extraer adecuadamente el aire, asegúrese de dirigir el aire hacia el exterior por medio de un conducto. No extraiga el aire a espacios contenidos entre paredes o techos ni en áticos, sótanos bajos ni en la cochera.
- **ADVERTENCIA:** Desconecte la alimentación eléctrica antes de realizar labores de servicio.

INSTALACIÓN EN CONSTRUCCIONES EXISTENTES

PREPARACIÓN DEL SITIO DE INSTALACIÓN

IMPORTANTE: Se requiere una tolerancia mínima de 18 pulg. (45.7 cm) por encima del techo.

1. Corte un orificio de 8-⅞ pulg. (22.5 cm) de diámetro en el techo adyacente a la viga del techo. Instale el soporte de manera que pueda aguantarse la cubierta en ambos lados. Si no es posible poner el orificio al lado de una viga, instale dos soportes para que haya un apoyo adecuado de la cubierta.
2. Desconecte la alimentación en el interruptor automático de circuitos. Pase el cableado de la casa (con conexión a tierra) desde el interruptor de pared hasta la ubicación del ventilador. IMPORTANTE: Asegúrese de que todo el cableado cumpla con los códigos de electricidad y de que la unidad esté bien conectada a tierra.

MONTAJE DE LA CUBIERTA

NOTA: Los soportes de montaje y las barras de suspensión que se incluyen con la unidad no se utilizarán para la instalación en construcciones existentes.

1. Saque el tornillo de la rejilla, conjunto de soporte del motor y la caja de salida de la unidad.
2. Quite la cinta de las celosías y asegúrese de que ambas secciones del regulador se muevan libremente.
3. Coloque la cubierta en la sección recortada. Haga pasar el cableado de la casa a través de la abertura de la caja de conexiones.
   NOTA: Se debe instalar la cubierta de manera tal que la viga o el soporte no obstaculicen la instalación de la caja de conexiones.
4. Con tornillos o clavos, asegure la cubierta a la(s) viga(s)/soporte(s), a través de las ranuras tipo bocallave que están a los lados de la cubierta. Asegúrese de que el reborde de yeso quede contra el techo terminado.
5. Conecte el conducto de 7 pulg.

PARA HACER LAS CONEXIONES

1. Quite uno de los dos agujeros ciegos laterales de la caja de conexiones. Instale un conector de caja de 7/8 pulg. (no incluido). Inserte el cableado de la casa aproximadamente 6 pulg. (15 cm) a través del conector de caja y asegúrelo apretando los tornillos. Con tuercas para cable (no incluidas) conecte el cableado de la casa al receptáculo de la tapa de la caja de conexiones: negro a negro y blanco a blanco. Asegure la tierra (cable sin aislamiento) con el tornillo de tierra verde de la caja de conexiones.
2. Instale la caja de conexiones en la abertura de la cubierta y asegúrela con los dos tornillos cortos incluidos. Haga pasar todo el cableado a la caja de conexiones y asegure la tapa.

INSTALACIÓN EN CONSTRUCCIONES NUEVAS

MONTAJE DE LA CUBIERTA

1. Saque el tornillo de la rejilla y el conjunto de soporte del motor de la unidad.
   NOTA: Estas piezas pueden dejarse a un lado hasta que el techo terminado esté en su sitio.
2. Inserte la caja de conexiones en la cubierta y asegúrela con dos tornillos cortos (incluidos).
3. Saque el agujero ciego apropiado de la caja de conexiones e instale un conector de caja.
4. Inserte los soportes de montaje en las ranuras en la cubierta del ventilador.
5. Quite la cinta de las celosías y asegúrese de que ambas secciones del regulador se muevan libremente.
6. Coloque las barras de suspensión en los soportes de montaje. Clave las barras de suspensión a la viga, ajustándolas ligeramente de manera que la cubierta quede firme en su sitio. Suba o baje los soportes de montaje para ajustar la cubierta, de manera que el reborde de yeso quede al ras con el techo terminado.
7. Conecte el conducto de 7 pulg.

PARA HACER LAS CONEXIONES

IMPORTANTE: Asegúrese de que todo el cableado cumpla con los códigos de electricidad y de que la unidad esté bien conectada a tierra. Desconecte la alimentación en el interruptor automático de circuitos.

1. Pase el cableado de la casa (con tierra) A TRAVÉS DEL CONECTOR DE LA CAJA. Con tuercas de cable (no incluidas), conecte el cableado de la casa al ventilador: negro a negro y blanco a blanco. Conecte el cable de tierra al tornillo verde de tierra.
2. Asegure la tapa de la caja de empalme.

FINALIZACIÓN DE LA INSTALACIÓN

1. Instale el conjunto de motor/aspa en la cubierta, con el enchufe hacia el receptáculo. Enganche las ranuras tipo bocallave del soporte de montaje del motor en dos (2) tornillos de montaje. Apriete los tornillos y enchufe el motor en el receptáculo. Asegúrese de que el aspa del ventilador gire libremente.
2. Coloque la rejilla sobre la unidad y asegúrela con el tornillo de mariposa incluido.
3. Vuelva a conectar la energía eléctrica y compruebe el funcionamiento.
   NOTA: Con este ventilador puede utilizarse un filtro permanente lavable opcional. Si desea, pídalo por separado especificando el modelo 834 de NuTone.

MANTENIMIENTO

- Limpie la rejilla con una solución de agua y jabón suave.
- Si se utiliza el filtro opcional, puede desmontarlo y limpiarlo en agua jabonosa. Enjuáguelo bien y permita que se seque completamente antes de colocarlo en el ventilador de techo. Para obtener los mejores resultados, limpie el filtro frecuentemente.

PIEZAS DE REPUESTO

MODELO SERIE 8210

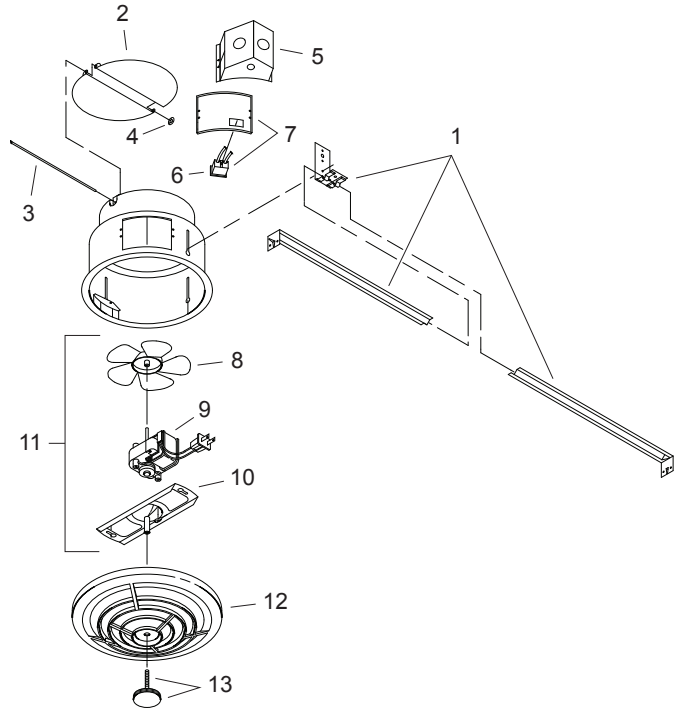

Clave n.º	Pieza n.º	Descripción
1	1024B000	Juego de barra de suspensión y soporte de montaje
2	16754000	Mitad del amortiguador (se requieren 2)
3	16755000	Varilla de bisagra
4	16756000	Tuerca Tinnerman
5	11320000	Caja de conexiones
6	99270982	Receptáculo de enchufe
7	10247000	Conjunto de tapa de caja de conexiones (incluye la clave n.º 6)
8	68293000	Aspa del ventilador
9	34417000	Motor
10	17674000	Conjunto de motor/soporte
11	16665000	Conjunto de la unidad eléctrica (incluye claves n.º 8, 9, 10)
12	S99111332	Rejilla
13	97017716	Juego de montante y perilla de rejilla

Garantía limitada de un año

GARANTÍA DEL PROPIETARIO: Broan-NuTone garantiza al comprador consumidor original de sus productos por un período de un (1) año desde la fecha original de compra, que tales productos están libres de defectos en material y mano de obra. **NO HAY OTRAS GARANTÍAS, EXPRESAS O IMPLÍCITAS, INCLUYENDO, ENTRE OTRAS, GARANTÍAS IMPLÍCITAS DE COMERCIALIZACIÓN O ADAPTABLES A UN PROPÓSITO EN PARTICULAR.**

Durante este período de un año, Broan-NuTone reparará o reemplazará a su opción y sin costo, cualquier producto o parte que se encuentre defectuoso bajo condiciones normales de uso y servicio. ESTA GARANTÍA NO CUBRE A LOS ARRANCADORES PARA LÁMPARAS FLUORESCENTES O A LOS TUBOS FLUORESCENTES, FILTROS, CONDUCTOS, TAPAS DE TECHO, TAPAS DE PARED Y OTROS ACCESORIOS PARA CANALIZACIÓN. Esta garantía no cubre (a) Mantenimiento y servicios normales, ni (b) Productos o partes sujetos al mal uso, negligencia, accidente, mantenimiento inadecuado o reparaciones (por otros ajenos a Broan-NuTone), instalación defectuosa o una instalación contraria a las instrucciones de instalación recomendadas.

La duración de cualquier garantía implícita está limitada a un periodo de un año según se especifica en la garantía expresa. Algunos estados no permiten limitación en cuanto a la duración de una garantía implícita, por lo que la limitación arriba indicada puede que no se apliqué a usted.

LA OBLIGACIÓN DE BROAN-NUTONE DE REPARAR O REEMPLAZAR A SU OPCIÓN, SERÁ EL ÚNICO Y EXCLUSIVO RECURSO QUE TENDRÁ EL COMPRADOR BAJO ESTA GARANTÍA. BROAN-NUTONE NO SERÁ RESPONSABLE POR DAÑOS INCIDENTALES, CONSECUENTES O ESPECIALES QUE RESULTEN A CONSECUENCIA O SEAN INDEPENDIENTES DEL USO O DESEMPEÑO DEL PRODUCTO. Algunos estados no permiten la exclusión o limitación de daños incidentales o consecuentes, de modo que la limitación o exclusión arriba indicada pueda que no se aplique a usted. Esta garantía le proporciona derechos legales específicos, y usted podría tener otros derechos, los cuales varían de un estado a otro. Esta garantía reemplaza a todas las garantías anteriores.

SERVICIO DE GARANTÍA: Para tener derecho al servicio de garantía, usted debe (a) notificar a Broan-NuTone a la dirección o al número de teléfono indicado abajo, (b) indicar el número de modelo y la identificación de la parte y (c) describir la naturaleza de cualquier defecto en el producto o parte. Al momento de solicitar el servicio por la garantía, usted debe presentar un comprobante de la fecha original de compra.

Fecha de la instalación

Constructor o instalador

Número de modelo y descripción del producto

SI NECESITA ASISTENCIA O SERVICIO - COMUNÍQUESE A:

Broan-NuTone LLC Hartford, Wisconsin www.nutone.com 888-336-3948
Broan-NuTone Canada Mississauga, Ontario www.nutone.ca 877-896-1119

Rev. 08/2007